204

APPLICATION FOR SPECIAL DESIGNATED LICENSE
CITY OF LINCOLN CITY CLERK'S OFFICE
555 S 10TH ST
LINCOLN NE 68508
PHONE: (402) 441-7438

FILED
CITY CLERK'S OFFICE
2015 JUN 16 PM 3 22
CITY OF LINCOLN
NEBRASKA

7/16
OD

DO YOU NEED POSTERS? YES ☐ NO ☐

RETAIL LICENSE HOLDER ☒

NON PROFIT APPLICANT ○

Non Profit Status (check one that best applies):
Municipal ○ Political ○ Fine Arts ○ Fraternal ○ Religious ○ Charitable ○ Public Service ○

COMPLETE ALL QUESTIONS

1. Type of alcohol to be served and/or consumed: Beer ☒ Wine ☒ Distilled Spirits ☒

2. Liquor license number and class (i.e. C55441, CK55441)
(If you're a nonprofit organization leave blank) CK 103354

3. Licensee name (last, first,), corporate name or limited liability company (LLC) name (As it reads on your liquor license). If you are a nonprofit, name & address of the organization.

NAME:	Y.A.M.S., Inc. dba Joysticks Arcade Bar		
ADDRESS:	350 Canopy St. Ste-230		
CITY:	Lincoln	**ZIP:**	68508

4. Location where event will be held; name, address, city, county, zip code

BUILDING NAME:	The Railyard		
ADDRESS:	300/350 Canopy	**CITY:**	Lincoln, NE
ZIP:	68508	**COUNTY & COUNTY #:**	Lancaster, #2

a. Is this location within the city/village limits? YES ☒ NO ☐

b. Is this location within the 150' of church, school, hospital or home for aged/indigent or for veterans and/or wives? YES ☐ NO ☒

c. Is this location within 300' of any university or college campus YES ☐ NO ☒

5. Date(s) and Time(s) of event (no more than six (6) **consecutive** days on one application)

Date	Date	Date	Date	Date	Date
July 16, 2015					
Hours	**Hours**	**Hours**	**Hours**	**Hours**	**Hours**
From 3 pm	From	From	From	From	From
To 8:30 pm	To	To	To	To	To

a. Alternate date: _____

b. Alternate location: _____
(Alternate date or location must be specified in local approval)

6. Indicate type of activity to be carried on during event:
○Dance ○Reception ○Fund Raiser ☒Beer Garden ○Sampling/Tasting
Other: _____

7. Description of area to be licensed
Inside building, dimensions of area to be covered **IN FEET** _____x_____
(not square feet or acres)
See Attachment
*Outdoor area dimensions of area to be covered **IN FEET** _____x_____
***SKETCH OF OUTDOOR AREA (or attach copy of sketch) (sample sketch)**
See Attachment

If outdoor area, how will premises be enclosed?
__X__fence _____snow fence _____chain link _____cattle panel _____tent
other: _____

8. How many attendees do you expect at event? 2000

9. If over 150 attendees. Indicate the steps that will be taken to prevent underage persons from obtaining alcohol beverages. (Attach separate sheet if needed)
_____
See Attachment

10. Will premises to be covered by license comply with all Nebraska sanitation laws? YES☒ NO☐
a. Are there separate toilets for both men and women? YES☒ NO☐

11. Retailer: Will you be purchasing your alcohol from a wholesaler? YES☒ NO☐
Non-Profit: Where will you be purchasing your alcohol?
Wholesaler _____ Retailer _____ (includes wineries) Both _____ BYO _____

12. Will there be any games of chance operating during the event? YES☐ NO☒
If so, describe activity: _____

NOTE: Only games of chance approved by the Department of Revenue, Charitable Gaming Division are permitted. All other forms of gambling are prohibited by State Law: There are no exceptions for Non Profit Organizations or any events raising funds for a charity. This is only an application for a Special Designated License under the Liquor Control Act and is not a gambling permit application.

13. Any other information or requests for exemptions (**must** be received by Commission 30 days prior to event, complete NLCC form 140): _____

14. Name and **telephone number/cell phone number** of immediate **supervisor.** This person will be at the location of the event when it occurs, able to answer any questions from Commission and/or law enforcement before and during the event, and who will be responsible for ensuring that any applicable laws, ordinances, rules and regulations are adhered to. **PLEASE PRINT LEGIBLY**

Print name of Event Supervisor: _____

Signature of Event Supervisor: _____

Event Supervisor phone: Before _____ During _____

Email address: _____

Consent of Authorized Representative/Applicant

15. I declare that I am the authorized representative of the above named license applicant and that the statements made on this application are true to the best of my knowledge and belief. I also consent to an investigation of my background including all records of every kind including police records. I agree to waive any rights or causes of action against the Nebraska Liquor Control Commission, the Nebraska State Patrol or any other individual releasing said information to the Liquor Control Commission or the Nebraska State Patrol. I further declare that the license applied for will not be used by any other person, group, organization or corporation for profit or not for profit and that the event will be supervised by persons directly responsible to the holder of this Special Designated License.

sign here _____ Vice President 06/15/15
Authorized Representative/Applicant Title Date

Jamie Root
Print Name

This individual must be listed on the application as an officer or stockholder unless a letter has been filed appointing an individual as the catering manager allowing them to sign all SDL applications.

The law requires that no special designated license provided for by this section shall be issued by the Commission without the approval of the local governing body. For the purposes of this section, the local governing body shall be the city or village within which the particular place for which the special designated license is requested is located, or if such place is not within the corporate limits of a city or village, then the local governing body shall be the county within which the place for which the special designated license is requested is located.

SUPPLEMENTAL FORM
REQUIRED FOR ALL OUTDOOR EVENTS
(Including those for Non Profit Organizations)

Name of Event:	Railyard Tailgate		
Applicant and Sponsoring Organization or Individual (if applicable):			
Date(s) of Event:	7/16/2015	Hours:	3pm – 8:30pm
Alternate Date(s):		Hours:	

Is the event open to the public? X Yes ____ No

How will you ensure that minors will not be served or consume beverages containing alcohol: _____

Will food be served? X Yes ____ No If yes, please list food to be served: Hot dogs in common Space. Regular Menus in restaurants

Will non-alcoholic beverages be served: X Yes ____ No
If yes, please list non-alcoholic beverages to be served: Bottled Water, non bottled water, Soda, Coffee, Tea

Who will serve the beverages containing alcohol? See Attachment
Must complete Server/Seller Applicant Information Sheet.

Have the designated servers received responsible beverage server training? X Yes ____ No

Will there be a charge for admission? ____ Yes X No

In the last 12 months, have you received notice of a liquor law violation that occurred during an event at which you were the special designated licensee? ____ Yes X No If so, explain: _____

Applicant's Signature

Date 6/15/15

SITE PLAN INFORMATION
REQUIRED FOR ALL OUTDOOR EVENTS

Please provide a drawing showing the following. Provide as much detail as possible to ensure your application is not returned to you for more information. Attach additional drawings, dimensions if necessary.

1. Number of Entry & Exit Points & Dimensions: (_____' x _____')
2. Size & location of tent(s) (heights, width, depth)
3. Size of area being used (_____ x _____)
4. Location & type of cooking equipment (if used)
5. Location of tables & chairs; If stage for band provided & dance area, show location & dimensions on drawing.
6. Height & type of fencing to be used.

Note: Two (2) exit points must be indicated on your drawing. These exits <u>cannot</u> lead patrons into the building. Questions relating to entry/exit points; electrical wiring; tent sizes can be directed to: Chuck Schweitzer, Fire Prevention Bureau: (402) 441-6441.

See attachment

ATTACH EXTRA PAGES IF NECESSARY

Joysticks

EMP #	NAME	DOB
101	JAMIE J ROOT	12/20/1979
102	JOSHUA J ROOT	8/16/1977
105	KIMBERLY D MUMBY	7/10/1973
106	BROCK S MILLER	1/20/1988
116	JESALYN M DRAPER	12/30/1988
118	KIRSTEN J MALOTKY	9/27/1990
120	JOSEPH R TARCZON	2/25/1986
134	BIANCA L CONWAY	7/14/1992
139	RANDALL R STROPE	5/21/1953

REQUEST FOR EXEMPTION FOR WAIVER OF DOUBLE FENCING RULE

(MUST BE SENT WITH APPLICATION A MINIMUM OF 30 DAYS PRIOR TO THE DATE OF THE EVENT)

WHY DOUBLE FENCING IS NOT AVAILABLE Permanent fencing is available and temporary fencing has been purchased.

TYPE OF FENCING TO BE USED See attachments

HEIGHT OF FENCING TO BE USED See attachments

HOW AREA WILL BE PATROLLED LPD & Private Security

EXPECTED NUMBER OF ATTENDEES 2,000

DIAGRAM OF PROPOSED AREA:

See attachments

Fencing Type

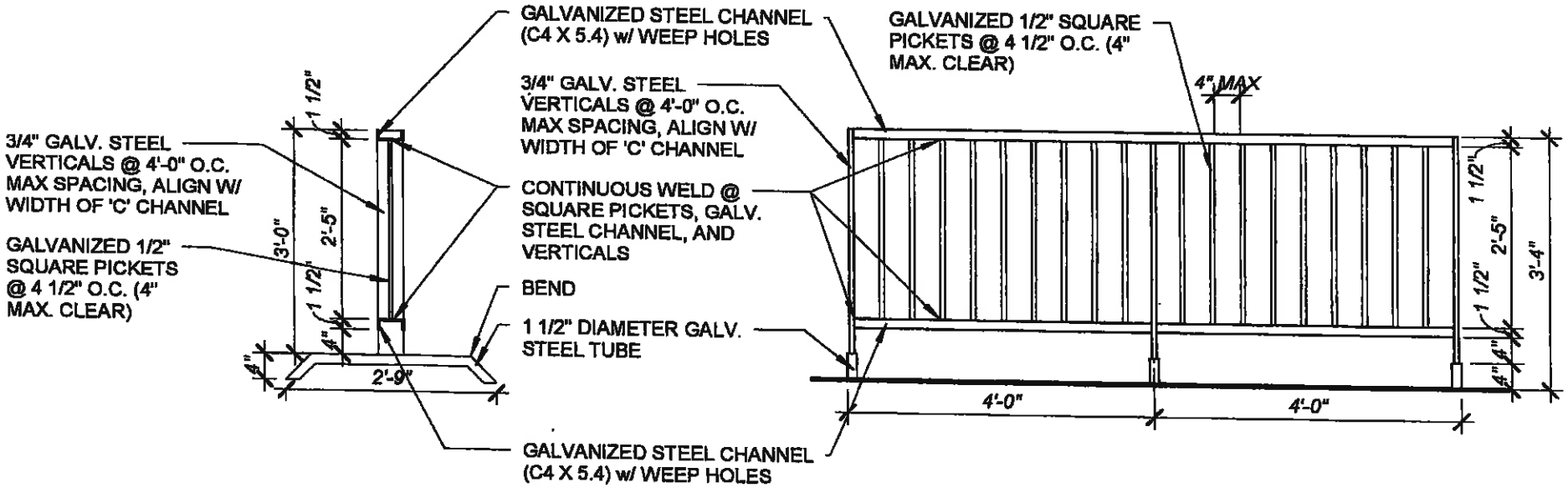

1 MOVEABLE FENCE DETAILS
1/2" = 1'-0"

ENCOMPASS architects, pc
720 'O' Street, Lot F
Lincoln, NE 68508
P 402 477 2404
F 402 477 2388
www.EncompassArch.com

© Copyright Encompass Architects

THE RAILYARD
TRACTION DEVELOPMENT PARTNERS
CANOPY STREET & 'R' STREET
LINCOLN, NE
Project No. 12-1500
Issue Date: 06/22/13

ENTERTAINMENT DISTRICT APPLICATION

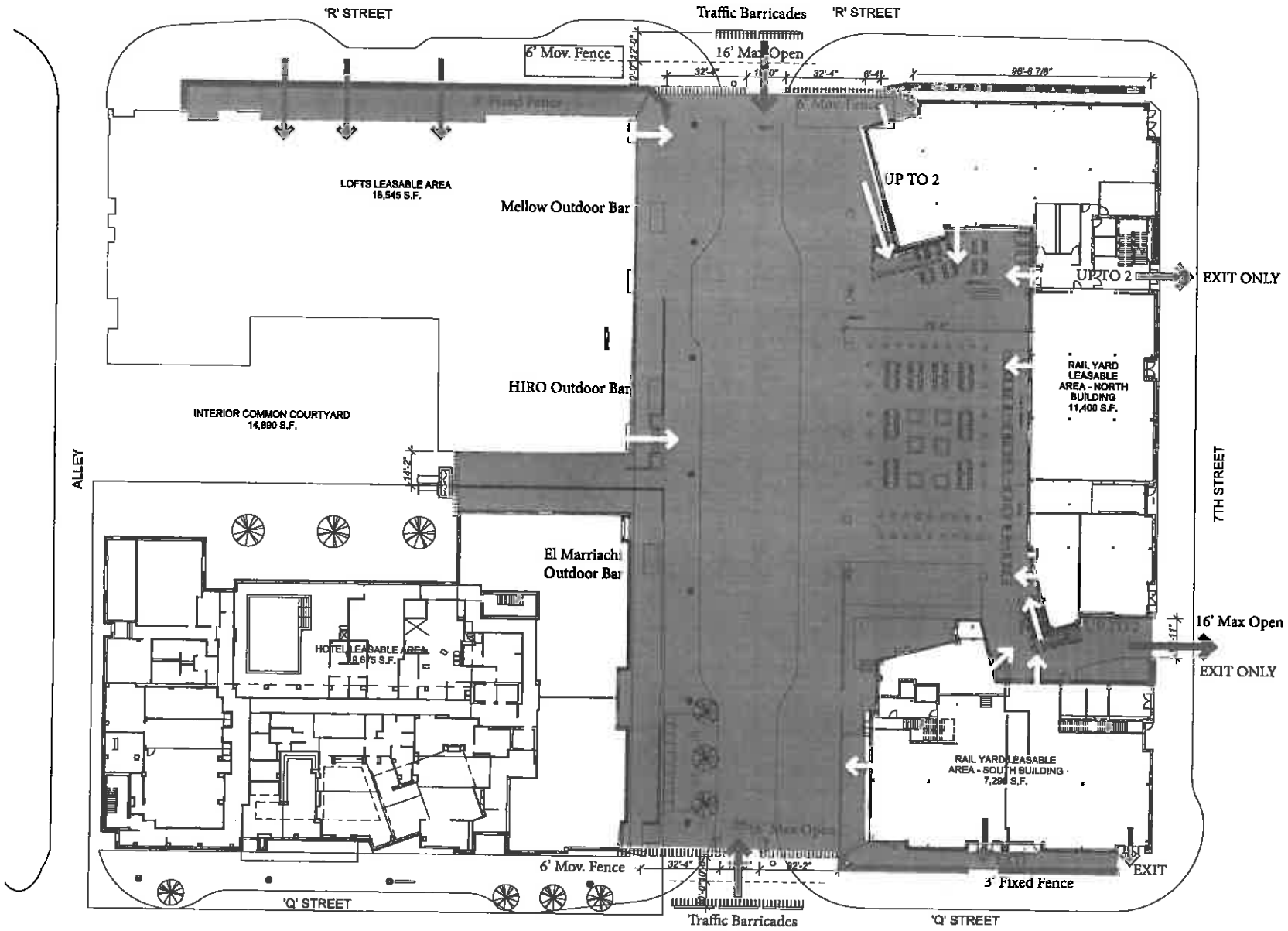
'R' STREET
Traffic Barricades
'R' STREET
6' Mov. Fence
16' Max Open
LOFTS LEASABLE AREA
18,545 S.F.
Mellow Outdoor Bar
UP TO 2
UP TO 2
EXIT ONLY
HIRO Outdoor Bar
INTERIOR COMMON COURTYARD
14,890 S.F.
RAIL YARD
LEASABLE
AREA - NORTH
BUILDING
11,400 S.F.
ALLEY
7TH STREET
El Marriachi
Outdoor Bar
HOTEL LEASABLE AREA
16' Max Open
EXIT ONLY
RAIL YARD LEASABLE
AREA - SOUTH BUILDING
7,298 S.F.
6' Mov. Fence
3' Fixed Fence
EXIT
'Q' STREET
Traffic Barricades
'Q' STREET

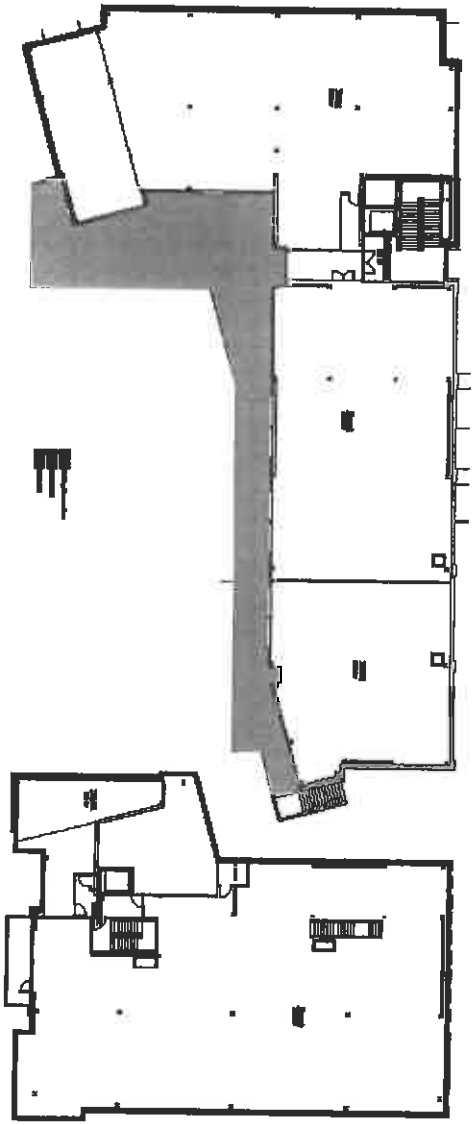

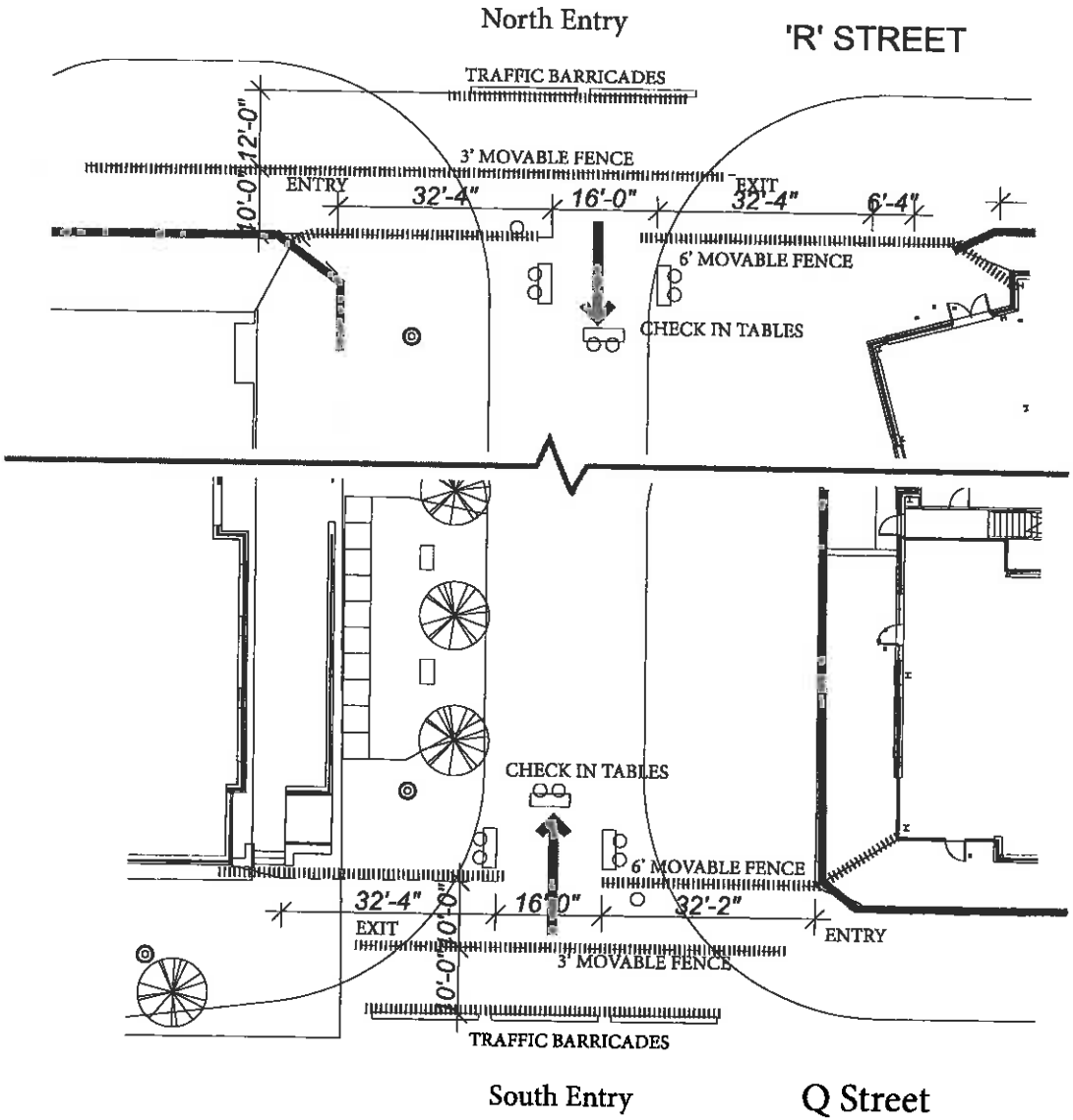
North Entry
'R' STREET
TRAFFIC BARRICADES
3' MOVABLE FENCE
10'-0"
12'-0"
ENTRY
32'-4"
16'-0"
EXIT
32'-4"
6'-4"
6' MOVABLE FENCE
CHECK IN TABLES
CHECK IN TABLES
6' MOVABLE FENCE
32'-4"
16'-0"
32'-2"
EXIT
ENTRY
3' MOVABLE FENCE
10'-0"
10'-0"
TRAFFIC BARRICADES
South Entry
Q Street