USWEST is now Qwest
Qwest Wireless, L.L.C.
910 North 43rd Avenue 2nd Floor
Omaha, Nebraska 68131

December 13, 2000

City of Lincoln
Jennifer Dam
555 S. 10th Street, STE 213
Lincoln, NE 68508

RECEIVED
14
LINCOLN CITY/LANCASTER COUNTY
PLANNING DEPARTMENT

RE: 600 Fletcher Ave., Lincoln, Nebraska 68521 - LIN021c

Dear Ms. Dam:

The following is the Personal Wireless Service Facilities Application Requirements as per your request.

- The record owner is Francis & Evelyn Moles, husband and wife, as joint tenants, 600 Fletcher Ave., Lincoln, Nebraska 68521.
- The statement of permission is enclosed.
- The type of site we are proposing is a monopole.
- The Metes and Bounds description has been enclosed in the drawing package.
- The Plot Plan has been enclosed.
- There are digital photographs, some representative of sight lines.
- The Site Elevation has been enclosed in the drawing package.
- Before and after photographs have been enclosed.
- The landscaping plan is including in the "Drawing Package" and meets all the requirements of Lincoln's "Design Standards for Screening and Landscaping" Section G. 9. Broadcast Towers
- The proposed site is zoned AG. This site is considered a "Sensitive" site, as defined in Section 27.68.080 (C), as there are other towers within ½ mile from the proposed site, and it is located in an entryway corridor. We have made good faith efforts to co-locate on all of the three other towers located in this vicinity, but were unable to. First is the Alltel tower located at 7th & Fletcher. We have a lease with Alltel on this site and have even received an Administrative Permit, No. 00014. Before filing an application, we perform a structural analysis on the tower to insure that it structurally safe to handle the weight of our equipment, which it did. Before we were able to execute the lease and zone our equipment, AT&T went on the tower. We then had to perform a second structural analysis, but found the tower was unable to handle the weight of Qwests' equipment. We had a second structural company perform a new analysis, but the results are the same. I have enclosed the most recent copy of the structural analysis for review. The second tower is owned by Sprint and the third tower is owned by Western Wireless. These towers have been found technically infeasible, and are explained in the section "RF Explanations." As a good faith effort, we have submitted an application to Western Wireless to co-locate on the tower, along with an application-processing fee. Copies of the application have been enclosed for review, along with an email from the company explaining the timeline for applications. The proposed site does help to "cluster" the vertical mass of existing and proposed structures. The tower will

also be made co-locatable for two other like carriers, eliminating the need for more towers in the future.

- Equipment information has been enclosed.
- A colors and material brochure has been enclosed.
- There will not be any fencing or illumination on the monopole, unless FAA requires a light on top of the pole. The finish color will be galvanized for the monopole and neutral green for the equipment box. The base of the tower will screened by the landscaping required under Lincoln's "Design Standards for Screening and Landscaping" Section G. 9. Broadcast Towers.
- Since there are already three towers in the vicinity, the forth tower will not have a major impact on the surrounding areas. The proposed site helps to "cluster" the vertical mass of the existing and proposed structures. The design of the monopole is slim, since we don't run coax through the inside. We need a height of 123', still giving room for up to two other like carriers to locate on this tower. That would also help to minimize the obtrusiveness for when future providers come into the area. There will not be any artificial light or color provisions on this tower.
- Copies have been enclosed labeled as Environmental I & II Documents
- All sites are screened for FAA requirements; and for any site requiring FAA registration, its approval will be provided at the time of obtaining a building permit. A letter has been enclosed summarizing the screening result, namely that it is in compliance with FAA regulations, along with backup data from the screening program.
- A statement of co-location is enclosed under "Permission." Nextel and Cricket have both been contacted about co-located on this site, but at this time, are not interested in giving us a letter of intent.
- We are requesting a waiver of the fall zone requirement. We do meet all the setbacks on the property
- A Pole Calculation has been included to demonstrate the safety of the monopole.
- The installation is designed to withstand 100 m.p.h. winds, and is included in the Pole calculation.
- The inspection and maintenance program will follow the EIA Maintenance List, which has been enclosed.
- Upon completion of the city approval process and at the time of obtaining a building permit, the following items will be recorded at the Register of Deeds: A Memorandum of Agreement with the property owner along with any access or utility easements. These items are filed at this time in order to avoid encumbering the landowner's title prematurely.
- A Performance Bond in the amount of $35,000.00 has been included as surety for the facilities located at 600 Fletcher Ave., Lincoln, Nebraska 68521, the address of this application.
- The Applicant understands that the Lincoln Ordinance, by which this application is reviewed and approved, also contains indemnity documentation that establishes an agreement between the Applicant and the City of Lincoln, as a condition of this application's approval according to the Ordinance.

This should be all the information as required by the checklist. If you have any questions, please feel free to contact me on my mobile at (402) 290-6533.

Thank you,

Jill Bazzell
Real Estate Consultant
Qwest Wireless, L.L.C.

Personal Wireless Service Facilities
Application Requirements
Lincoln, Nebraska

Site Name and Number: **Moles, LIN021c**

- ❑ Applicant name, title, company name, address, phone.
  - ❑ **Comments:**

    Sharon Martin
    Real Estate Manager
    Or
    Jill C. Bazzell
    Real Estate Consultant
    Qwest Wireless, L.L.C.
    910 North 43rd Avenue, 2nd Floor
    Omaha, Nebraska 68131
    Office Phone: (402) 556-4924

RECEIVED
LINCOLN CITY/LANCASTER COUNTY
PLANNING DEPARTMENT

- ❑ FCC license holder company name, contact name, title, address, phone.
  - ❑ **Comments:**

    John H. Gonner
    V.P. Engineering & Operations
    Qwest Wireless, L.L.C., a Delaware Limited Liability Company
    1860 Lincoln, Fourteenth Floor
    Denver, Colorado
    Office Phone: (720) 947-1620

- ❑ Owner and operator company name, contact name, title, address, phone.
  - ❑ **Comments:**

    Steven M. Mangold
    Regional Real Estate Manager
    Qwest Wireless, L.L.C.
    426 North Fairview, Room 101
    St. Paul, Minnesota 55104
    Office Phone: (651) 642-6016

- ❑ Record owner(s) of property with name, address and phone from abstractor or attorney.
  - ❑ Comments: **Francis & Evelyn Moles, 600 Fletcher Ave., Lincoln, NE 68521**

- ❑ Statement of permission signed by record owner(s).
  - ❑ Comments: **Enclosed under "Permission"**

- ❑ Type of Site:
  - ❑ **Monopole**

- ❑ Metes and bounds description of special permit area, including tower, base equipment, parking, security barrier and landscaping. This must refer to the legal description of the property including lot, block, subdivision, section, township, range.
  - ❑ **Comments: This information has been included in the drawing package.**

- ❑ Plot Plan showing the following:
  - ❑ Tower, antenna, antenna support structure, building fencing, buffering, access, etc.
  - ❑ Drawn to an engineer's scale so as to be legible
  - ❑ Lot lines
  - ❑ Lease area lines
  - ❑ Dimensions of lease area
  - ❑ Distances from lease area to property lines
  - ❑ Specific locations and dimensions of al proposed structures and equipment
  - ❑ Distance from all proposed structures and equipment within the lease area to the boundary of the lease area

- ❑ Distance from all proposed structures and equipment within the lease area to the property lines
- ❑ Location of all existing structures on the property
- ❑ Distance from the lease area to the existing structures
- ❑ If existing structure is within lease area, distance from proposed to existing structures
- ❑ Location of proposed guy wires
- ❑ Proposed security barrier, including type, extent and point of controlled entry
- ❑ Indication of anti-climbing devices on the tower, or a notation that no climbing devices will be placed on the tower below 20 feet
- ❑ Galvanized finish of tower
- ❑ Lighting
- ❑ Flush mounting of screening of antennae to walls
- ❑ Architectural compatibility, construction, painting, or screening of antennas to match with building and/or wall on which it is mounted
- ❑ Indication of similar color and texture of equipment buildings mounted on a roof to exterior building walls
- ❑ Complete screening from view of roof mounted antenna and base stations by materials that are consistent and compatible with the design, color, materials, and design of the building
- ❑ Type of antennae – whip (no more than 7' diameter) or panel (no more than 2' x 8')
- ❑ Notation that antenna and support structure will be designed to withstand wind force of 100mph without use of guy wires
- ❑ Location of all roads
- ❑ Location and dimensions of access to proposed facility
- ❑ Location and dimensions of parking to service the facility
- ❑ Location of existing trees and shrubs
- ❑ Location of other significant existing site features
- ❑ Proposed changes to the existing property including grading, vegetation removal, roads or driveways
- ❑ Zoning of site
- ❑ Zoning and land uses of adjacent properties
- ❑ Ground space for future carrier's equipment (1 if up to 100 feet, 2 if over 100 feet)
- ❑ Space on support structure for future carrier's antennas
- ❑ Flood plain information, including elevation of platform, generator, and fuel tank, and a notation that the tower will be designed to prevent collapse or lateral movement in the event of a flood, constructed with materials and utility equipment resistant to flood damage, and constructed by methods and practices that minimize flood damage
- ❑ **Comments: Plot plan information has been provided in the drawing package.**

- ❑ Sight Lines Representation:
  - ❑ Each in profile and at a legible scale
  - ❑ From any public or private road within 300 feet of the facility to this highest visible point of the facility
  - ❑ From the viewpoint of each residential building within 300 feet of the facility to the highest visible point of the facility
  - ❑ Showing all intervening trees and buildings
  - ❑ If there is only one residential building within 300 feet, then at least two site lines from the closest habitable structures or public roads
  - ❑ If there is a public view corridor (Capitol View, entrance to city, view of City Landmark, vista) within 100 feet, the elements of the proposed facility that can be viewed from this public space or vista point
  - ❑ **Comments: Digital photographs, some representative of sight lines, have been provided.**

- ❑ Sitting Elevation:
  - ❑ Dimensioned and to scale
  - ❑ From north, south, east and west
  - ❑ From all existing public and private roads that serve the property
  - ❑ For a 50 foot radius around the proposed facility
  - ❑ Showing:
    - ❑ Antennas, mounts, equipment enclosures, security barrier, platforms, cable runs, parking areas, and other construction or development with elevation dimensions to the highest point
      - ❑ If the security barrier blocks views of the facility, it should be cut away to

show the view behind the barrier
- ❑ All existing structures on the property
- ❑ Existing trees and shrubs at current height
- ❑ Proposed trees and shrubs, with approximate heights and time of installation dimensioned
- ❑ Grade changes, or cuts and fills, to be shows as original and new grade lines with two foot contours above mean sea level

❑ **Comments: Site elevation information has been provided in the drawing package.**

❑ Photographs:
- ❑ Before photo of each sight line from any public or private road within 300 feet, in color, 8½ by 11
- ❑ After photos showing antennas, mounts, equipment, cables, and security barrier, in scale with the scale indicated on the photo, from public roads and residential buildings within 300 feet
- ❑ **Comments: Before and after photographs have been included as an exhibit.**

❑ Landscape Plan:
- ❑ Meeting design standards and drawn to scale
- ❑ Showing:
  - ❑ Location and type of proposed landscape material
  - ❑ Method of planting
  - ❑ Number, botanical name, common name, design height, and design spread of material
- ❑ Plant material shall be selected from the "Plant Material List"
- ❑ Comments: **The landscaping plan is including in the "Drawing Package" and meets all the requirements of Lincoln's "Design Standards for Screening and Landscaping" Section G. 9. Broadcast Towers**

❑ Location Preference statement:
- ❑ "Preferred"
- ❑ If not "Preferred", the statement should describe:
  - ❑ Whether any Preferred Location Sites are located within the geographic service area
  - ❑ What good faith efforts were taken to investigate each preferred site, and why such efforts were unsuccessful
  - ❑ Why each Preferred Location was not technologically, legally or economically feasible
  - ❑ How and why the proposed site is required to meet service demands for the geographic service area and citywide network
  - ❑ The distance between the proposed facility and the nearest residential unit, and residentially zoned properties
- ❑ Sites in "Sensitive" locations will be considered only of the applicant:
  - ❑ Provides evidence showing what good faith efforts and measures were taken to secure a preferred or limited preference site within ½ mile of the facility, and
  - ❑ Demonstrates with engineering evidence why each such preferred or limited preference site was not technologically, legally or economically feasible

❑ Comments: **The proposed site is zoned AG. This site is considered a "Sensitive" site, as defined in Section 27.68.080 (C), as there are other towers within ½ mile from the proposed site, and it is located in an entryway corridor. We have made good faith efforts to co-locate on all of the three other towers located in this vicinity, but were unable to. First is the Alltel tower located at 7th & Fletcher. We have a lease with Alltel on this site and have even received an Administrative Permit, No. 00014. Before filing an application, we perform a structural analysis on the tower to insure that it structurally safe to handle the weight of our equipment, which it did. Before we were able to execute the lease and zone our equipment, AT&T went on the tower. We then had to perform a second structural analysis, but found the tower was unable to handle the weight of Qwests' equipment. We had a second structural company perform a new analysis, but the results are the same. I have enclosed the most recent copy of the structural analysis for review. The second tower is owned by Sprint and the third tower is owned by Western Wireless. These towers have been found technically infeasible, and are explained in the section "RF/RE Explanations." As a good faith effort, we have submitted an application to Western Wireless to co-locate on the tower, along with an application-processing fee. Copies of the application have been enclosed for review, along with an email from the company explaining the timeline for applications. The proposed site does help to "cluster" the vertical mass of existing and proposed structures. The tower will also be made co-locatable for two other like carriers, eliminating the need for more towers in the future.**

- ❑ Equipment brochures:
  - ❑ Antennas
  - ❑ Antenna mounts
  - ❑ Equipment shelters
  - ❑ Cables and cable runs
  - ❑ Security barrier
  - ❑ Other materials of the proposed facility, specified by generic type and specific treatment (e.g. stained wood, anodized aluminum)
  - ❑ **Comments: Equipment information has been included as an exhibit. (See "Equipment Info" exhibit.)**

- ❑ Color Board:
  - ❑ Colors and materials represented by a color board showing actual colors proposed of:
    - ❑ Antennas
    - ❑ Antenna mounts
    - ❑ Equipment shelters
    - ❑ Cable runs
    - ❑ Other construction
  - ❑ **Comments: An exhibit has been included featuring the details of our equipment. (See "Colors & Materials" exhibit.)**

- ❑ Security Barrier Description:
  - ❑ Should include method of fencing, finished color, method of camouflage, and illumination
  - ❑ Address screening of both equipment and tower base
  - ❑ Comments: **There will not be any fencing or illumination on the monopole, unless FAA requires a light on top of the pole. The finish color will be galvanized for the monopole and neutral green for the equipment box. The base of the tower will screened by the landscaping required under Lincoln's "Design Standards for Screening and Landscaping" Section G. 9. Broadcast Towers**

- ❑ Statement indicating measures designed to minimize potentially adverse effects on adjacent properties
  - ❑ Should give consideration to design, unobtrusiveness, minimum height necessary to accommodate the antenna, avoidance of artificial light, and coloring provisions
  - ❑ Comments: **Since there are already three towers in the vicinity, the forth tower will not have a major impact on the surrounding areas. The proposed site helps to "cluster" the vertical mass of the existing and proposed structures. The design of the monopole is slim, since we don't run coax through the inside. We need a height of 123', still giving room for up to two other like carriers to locate on this tower. That would also help to minimize the obtrusiveness for when future providers come into the area. There will not be any artificial light or color provisions on this tower.**

- ❑ Maintenance and monitoring program for antennae and equipment
  - ❑ Include frequency of maintenance services, back-up plans for disruption of service due to repair, and maintenance or monitoring activities
  - ❑ **Comments The inspection and maintenance of the equipment will be performed by field engineers who follow a regular routine for inspection, usually in four- to six-week cycles. They also perform regular service internally with the appropriate software. Major problems, while considered to be infrequent, will be attended by backup arrangements prepared to treat each problem according to the characteristics of the problem.**

- ❑ Copies of environmental documents required by any federal agency
  - ❑ **Comments: Copies have been provided as an exhibit. (See Environmental #1 & #2" exhibits.)**

- ❑ Copies of any required FAA, state or local aviation documents
  - ❑ **Comments: All sites are screened for FAA requirements; and for any site requiring FAA registration, its approval will be provided at the time of obtaining a building permit. A letter has been enclosed summarizing the screening result, namely that it is in compliance with FAA regulations, along with backup data from the screening program.**

- ❑ Co-location statement
  - ❑ Also included in lease

- ❑ Comments: **Enclosed under "Permission." Nextel and Cricket have both been contacted about co-located on this site, but at this time, are not interested in giving us a letter of intent.**

- ❑ Fall Zone/Setbacks:
  - ❑ If the tower or equipment does not meet the required fall zone or setbacks for that area, a statement requesting relief from that requirement
  - ❑ Comments: **We are requesting a waiver of the fall zone requirement. The proposed site does meet all the setbacks on the property.**

- ❑ Demonstration that the antenna and support structure are safe, and the surrounding areas will not be negatively affected by support structure failure, falling ice, or other debris
  - ❑ Comments: **Enclosed under "Pole Calculations"**

- ❑ Demonstration that the antenna and support structure will be designed to withstand a wind force of 100 miles per hour without the sue of supporting guy wires
  - ❑ Comments: **The installation is designed to withstand 100 m.p.h. winds. (See "Equipment Info" exhibit.)**

- ❑ Demonstration why it is necessary from a technical standpoint to have a tower within ½ mile of any other tower
  - ❑ Comments: **Enclosed under "RF/RE Explanations"**

- ❑ Evidence that the tower will be constructed and maintained in compliance with EIA standards
  - ❑ **Comments: An exhibit has been included indicating a checklist for maintaining and inspecting the structure according to EIA standards. (See "EIA Maintenance List" exhibit.)**

- ❑ A statement indicating that the easements or licenses on the site plan will be recorded with the Register of Deeds
  - ❑ **Comments: Upon completion of the city approval process and at the time of obtaining a building permit, the following items will be recorded at the Register of Deeds: A Memorandum of Agreement with the property owner along with any access or utility easements. These items are filed at this time in order to avoid encumbering the landowner's title prematurely.**

- ❑ Surety Documentation
  - ❑ In a form approved by the City Attorney, in an amount as determined by the City that guarantees the removal of the facility and the restoration of the property to its original condition, and to guarantee the installation of landscaping
  - ❑ Amount of bond, $ 35,000.00
  - ❑ **Comments: A Performance Bond in the amount of $35,000.00 has been included as surety for the facilities located at 600 Fletcher, Lincoln, Nebraska 68521, the address of this application.**

- ❑ Indemnity Documentation
  - ❑ In a form satisfactory to the City Attorney, that the permitted, successors and assigns shall, at its sole cost and expense, indemnify and hold harmless the City, its officers, officials, boards, commissions, agents, representatives, and employees against ant and all claims, suits, losses, expenses, causes of action, proceedings, and judgements for damage arising out of, resulting from, or alleged to arise out of or result from the construction, operation, repair, maintenance or removal of the provider's facilities. Indemnified expenses shall include, but not be limited to, all out-of-pocket expenses, such as costs of suit and defense and reasonable attorney fees, and shall also include the reasonable value of any services rendered by the City Attorney's office and employees of the City and any consultants retained by the City.
  - ❑ **Comments: The Applicant understands that the Lincoln Ordinance, by which this application is reviewed and approved, also contains indemnity documentation that establishes an agreement between the Applicant and the City of Lincoln, as a condition of this application's approval according to the Ordinance.**

RECEIVED
DEC 14 2000
LINCOLN CITY/LANCASTER COUNTY
PLANNING DEPARTMENT

USWEST is now Qwest

Qwest Wireless, LLC
910 North 43rd Ave.
2nd Floor
Omaha, NE 68131

Corby Dill
RF Systems Engineer
Office: 402/556-9287
PCS: 402/880-4798
Fax: 402/556-9992
Email: cdill@uswest.com

RECEIVED
DEC 14
LINCOLN CITY/LANCASTER COUNTY
PLANNING DEPARTMENT

September 18, 2000

RF Report for LIN021 (600 Fletcher Ave.)

1. ***Coverage Objective:*** This site should cover I-80 from the North 56th Street Exit to 1 mile west of the 9th Street exit. It should also cover I-180 south to Adams street, and Hwy 34 as far west as possible to extend Qwest footprint.
2. ***Alternate Locations***
   - **A.** ***Western Wireless tower at 14th and Fletcher***
     1. This tower is too far East to attain proper coverage on I-180 due to a ridge just West of the 9th Street exit.
   - **B.** ***Sprint tower at 14th and Fletcher***
     1. Same coverage issues as Western Wireless. Also, this pole is too short, extension to 120' is not feasible, so it would require replacement.
   - **C.** ***Alltel tower at 7th and Fletcher***
     1. This site was actually approved by zoning, and Qwest was willing to colocate. Unfortunately the pole was not structurally strong enough to support Qwest equipment in any configuration. Therefore another pole was required to attain Qwest coverage objectives.
3. ***Advantages of chosen location***
   - **A.** ***Coverage of I-80***
     1. The chosen location covers I-80 from the 56th Street exit to approximately one mile west of the 9th Street exit.
   - **B.** ***Coverage of I-180 / HWY 34***
     1. This location also meets all coverage objectives on I-180 south and Hwy 34 going west and north.
4. ***Conclusion***
   - **A. The site at 600 Fletcher Street is the best site to achieve engineering coverage objectives in this area.**

USWEST is now Qwest.
Qwest Wireless, L.L.C.
910 North 43rd Avenue 2nd Floor
Omaha, Nebraska 68131

December 14, 2000

City of Lincoln – Planning Department
Attn. Jennifer Dam
555 South 10th Street, Suite 213
Lincoln, NE 68508

RE: 600 Fletcher Ave. – LIN021c

Dear Ms. Dam:

The Alltel site at 7th & Fletcher has been ruled out as a candidate for structural reasons. We have a lease with Alltel on this site and have even received an Administrative Permit, No. 00014. Before filing an application, we perform a structural analysis on the tower to insure that it structurally safe to handle the weight of our equipment, which it did. Before we were able to execute the lease and zone our equipment, AT&T went on the tower. We then had to perform a second structural analysis, but found the tower was unable to handle the weight of Qwests' equipment. We had a second structural company perform a new analysis, but the results are the same. I have enclosed the most recent copy of the structural analysis for review.
The next enclosure is a copy of a co-location application that Qwest Wireless, L.L.C. has submitted to Western Wireless regarding their tower at 11th & Fletcher. Even though the site has been ruled out for RF Reasons, we applied for the co-location as a good faith effort.

Thank you,

Jill Bazzell
Real Estate Consultant
Qwest Wireless, L.L.C.

Enclosures (2)

Subject: Lincoln Nebraska pole info
Date: Mon, 23 Oct 2000 15:42:59 -0500
From: Edward O'Keefe <eokeeff@uswest.com>
Organization: SNELLING
To: kelly.lavery@wwireless.com
[redacted]

Kelly,

You have tower located in the area of 7th & Fletcher Streets in Lincoln Nebraska. Our RF engineers need some information on this tower so they can determine the feasiblity of colocating on this tower.

The information required would be the Lat & Long, Ground Elevation, Height of the tower and the heights available on this tower.

I appreciate your assistance on this matter and was pleased to hear from you so quickly today.

Thank you,

Ed O'Keeffe

No information received

060

Subject: **Co-location Process**
Date: Thu, 26 Oct 2000 18:09:24 -0700
From: Jill Bazzell <jbazzel@uswest.com>
Organization: SNELLING
To: kelly.lavery@wwireless.com

Kelly-
I am requesting the process you go through for co-location applications and a timeline. We are looking at a co-location on one of your towers in Lincoln Nebraska and need to know how long of a process this is. Please email me at jbazzel@uswest.com, or my mobile phone is (402) 290-6533.
Thank you
Jill Bazzell

RECEIVED
LINCOLN CITY/LANCASTER COUNTY
PLANNING DEPARTMENT

061

Subject: NELI Fletcher Collocation Request from Quest Communications
Date: Thu, 26 Oct 2000 15:02:11 -0700
From: "Lavery, Kelly" <Kelly.Lavery@wwireless.com>
To: "'jbazzel@uswest.com'" <jbazzel@uswest.com>

Jill,
Per our conversation, a typical collocation process takes about 90 days...we are expecting delays due to an overwhelming demand for collocation.

I spoke with Craig Vogt, Regional Project Manager for Nebraska and we will try to expedite as soon as possible; Trying to accommodate Quest Communications and the City Council.

Please find attached Western Wireless' External Collocation Guide, Site Access & Contact Form, Technical Data Application; All to be returned to my attention along with Application Fee.

Thank you,
Kelly Lavery
<<1. WWC Technical Data Application .doc>> <<Monopole Tower Drawing.vsd>> (visio software)

<<1a. WWC Site Access & Contact Form.doc>> <<3. WWC External Collocation Process Guide.doc>>

1. WWC Technical Data Application .doc	**Name:** 1. WWC Technical Data Application .doc **Type:** Microsoft Word Document (application/msword) **Encoding:** base64

Monopole Tower Drawing.vsd	**Name:** Monopole Tower Drawing.vsd **Type:** application/x-unknown-content-type-vsd_auto_file **Encoding:** base64

1a. WWC Site Access & Contact Form.doc	**Name:** 1a. WWC Site Access & Contact Form.doc **Type:** Microsoft Word Document (application/msword) **Encoding:** base64

3. WWC External Collocation Process Guide.doc	**Name:** 3. WWC External Collocation Process Guide.doc **Type:** Microsoft Word Document (application/msword) **Encoding:** base64

062

Subject: RE: Co-location Application
Date: Thu, 30 Nov 2000 09:39:35 -0800
From: "Lavery, Kelly" <Kelly.Lavery@wwireless.com>
To: "'Jill Bazzell'" <jbazzel@uswest.com>

WWC License LLC, a Delaware limited liability company 91-1973797

Thank you Jill.
Kelly

-----Original Message-----
From: Jill Bazzell [mailto:jbazzel@uswest.com]
Sent: Monday, November 27, 2000 3:31 PM
To: kelly.lavery@wwireless.com
Subject: Co-location Application

Kelly -

I am filling out a application for a co-location for Lincoln, Nebraska on 7th & Fletcher. I am ordering the "Application Processing" fee of $500.00, but need your Fed. Id. Number to issue the check. Could you please forward me that number as soon as possible?

Thank you,

Jill Bazzell
M-402-290-6533
W-402-558-4924

063

USWEST is now
Qwest.
Qwest Wireless, L.L.C.
910 North 43rd Avenue 2nd Floor
Omaha, Nebraska 68131

December 4, 2000

Kelly Lavery
National Collocation Coordinator
3650 131st Avenue, SE, Suite 400
Bellevue, WA 98006

RE: Letter of Request

Dear Ms. Lavery:

Qwest Wireless, L.L.C. is requesting to collocation on a Western Wireless tower located at 9th & Fletcher Ave in Lincoln, Nebraska. The following information has been requested to process the application:

RSA: NELI
Site Name: Fletcher
Site Coord: **This info was requested from you on 10/23/00, but we have not yet**
Legal Add: **received it. I have enclosed a copy of the email for your review.**
Tower Reg #:

Thank you,

Jill Bazzell
Real Estate Consultant
Qwest Wireless, L.L.C.

Enclosures (5)

EXTERNAL COLLOCATION PROCESS
CHECK LIST GUIDE

PRELIMINARY APPLICATION REVIEW PROCESS

- ☐ Submit written "Letter of Request" to collocate: Site specific information to include: RSA, Site Name, Site Coordinates, Legal Address & Tower Registration Number.
- ☐ Complete "Technical Data Application" (TDA).
- ☐ Submit TDA to Western Wireless National Collocation Coordinator (NCC) electronically, as well as a hard copy & required Application Fee to:
  kelly.lavery@wwireless.com
  Kelly Lavery, National Collocation Coordinator,
  3650 131st Avenue, SE, Suite 400, Bellevue, WA 98006
  Ph: 425-586-8725 or Fax: 425-586-8050
- ☐ Receive "Confirmation of Application" and attached "External Collocation Process Guide".
- ☐ Receive "Site Documentation Packet" with Entitlements pending further review of application.

PRELIMINARY SYSTEM DEVELOPMENT SITE DESIGN WALK

- ☐ Contact Regional Project Manager (RPM) to schedule (following receipt of a COPY "Site Documentation Packet" [SDP]). The RPM will receive the ORIGINAL "SDP" for applicable note taking & original signatures.
- ☐ Be prepared and flexible in scheduling a time with WWC RPM, PM & or Site Cell Tech.
- ☐ Bring a set of Architectural & Engineering drawings to redline & the SDP to follow process & take notes.
- ☐ Authorize & Sign ORIGINAL Preliminary designated areas with RPM.

SITE DEVELOPMENT DOCUMENTATION REVIEW

Please review the Preliminary Site Design Walk notes, make appropriate changes and make sure that the following items are completed and sent to Regional Project Manager (original drawings) with a copy to Nat'l Collocation Coordinator (reduced size drawing):

- ☐ Amended construction drawings including changes referenced at preliminary site design walk.
- ☐ Structural analysis.

LEASE NEGOTIATION

To expedite the lease negotiation process by Western Wireless please make sure that the following items are completed and attached prior to shipment:

- ☐ Four properly signed and notarized original lease agreements.
- ☐ Completed legal description and site / tower plan on all lease agreements.
- ☐ Copy of Prime Lease Agreement with landlord.
- ☐ Corporate (or equivalent) resolution authorizing signatory.
- ☐ Initial First Month's Rent & Site Walk one-time RPM Fee forwarded to NCC prior to issuance of NTP.

COMMENCEMENT

- ☐ One original executed lease will be forwarded to you.

NOTICE TO PROCEED Prerequisite

Copies of all governmental approvals will be required prior to issuance of the NTP, including, but not limited to:
☐ Yes ☐ No ☐ N/A ☐ SITE ACCESS & CONTACT FORM

☐ Yes	☐ No	☐ N/A	☐	PRE-CONSTRUCTION SITE WALK & NOTES
☐ Yes	☐ No	☐ N/A	☐	FAA APPROVAL
☐ Yes	☐ No	☐ N/A	☐	COUNTY APPROVAL
☐ Yes	☐ No	☐ N/A	☐	USFS / BLM APPROVAL
☐ Yes	☐ No	☐ N/A	☐	ZONING PERMIT
☐ Yes	☐ No	☐ N/A	☐	BUILDING PERMIT
☐ Yes	☐ No	☐ N/A	☐	UNDERGROUND UTILITY LOCATES
☐ Yes	☐ No	☐ N/A	☐	FINAL SITE PLAN
☐ Yes	☐ No	☐ N/A	☐	SAFETY PLAN
☐ Yes	☐ No	☐ N/A	☐	CERTIFICATE OF LIABILITY INSURANCE

✓ 2,000,000 General Liability
✓ 1,000,000 Auto Liability
✓ 5,000,000 Excess Liability (Umbrella)
✓ 1,000,000 Worker's Compensation and Employers' Liability
❖ "Western Wireless Corporation" must be named as additional insured

☐ Upon satisfaction of the terms of the NTP checklist, a NTP will be issued. This document will need to be signed by (3) parties to acknowledge the Construction Start and Date of Installation.

1. Tenant Project Manager
2. WWC Regional Project Manager
   a) Site Switch Tech Initials
3. National Collocation Manager

☐ Issuance by Nat'l Collocation Manager will constitute Final Approval.

CONSTRUCTION INSTALLATION

☐ Schedule Installation Date with Regional Project Manager.

(The RPM is required to be on site days of installation or WWC Project Manager or equivalent to supervise construction; **at a Daily PM Rate of $500.00**).

POST CONSTRUCTION SITE DESIGN WALK

☐ Approve ORIGINAL Post Construction Site Walk Design Abstract #2.

☐ Please provide the WWC RPM & Nat'l Collocation Coordinator with (reduced) as-built drawings within 15-30 days after Post Construction Walk.

☐ WWC Regional Project Manager reserves the right to redline drawings at Post Construction Site Walk. Any necessary changes will be noted

(Timelines for the above adherence will be within 30 days; Thereafter **25%** of monthly rent will be **charge daily as a Late Fee**).

western wireless

SITE ACCESS & CONTACT FORM

Western Wireless use ONLY

SITE INFORMATION

Site Market: _____ Site Name: _____ Site Number: _____

Site Address: _____

Access Type: _____ Combination: _____

CONTACT INFORMATION

Sys. Dev. Regional Project Manager: _____ Phone: _____

WWC PM or Cell Tech to OVERSEE Installation: _____ Phone: _____

General Manager Technical Operations: _____ Phone: _____

Field Technician: _____ Phone: _____

24-Hour Emergency Site Contact: _____ Phone: _____

Nat'l Collocation Manager: _____ Phone: _____

OWNER INFORMATION

Property Owner: _____ Phone: _____

Owner Contact Name: _____ Phone: _____

Collocation Applicant use ONLY

SITE CONTACT INFORMATION

Site Market: Lincoln Site Name: LIN Site Number: 021

Tenant Company Name: Qwest Wireless, L.L.C. Phone: 402-556-9990

Field Technician: Chad Loecker Phone: 402-556-9647

24-Hour Emergency Site Contact: _____ Phone: _____

Real Estate Management Company: Qwest Wireless, L.L.C., Sharon Martin Phone: 402-556-9434

COMPANY CONTACT INFORMATION

Site Acquisition Company: Qwest Wireless, L.L.C. Phone: 402-556-9990

Contact Name: Jill Bazzell Phone: 402-556-4924

RF Engineering Company: Qwest Wireless, L.L.C. Phone: 402-556-9990

Contact Name: Corby Dill Phone: 402-556-9287

Project Manager: Dave Johnston Phone: 402-558-4955

WWC Approved Installation Vendor: _____ Phone: _____

Operation Manager: _____ Phone: _____

Collocation Tenant use *ONLY*

Accounts Payable Contact: Ellie Billie Phone: 402-556-9993 Fax: 402-556-9992

Billing Address: 910 N. 43rd Ave., 2nd Floor, Omaha, NE 68131 Email: ebillie@uswest.com

Re: **NELI Fletcher**

western wireless

Dear **Jill** :
Thank you for your interest in collocating on the above stated WWC communication site. Please consider this letter to be confirmation receipt of **Qwest Wireless, L.L.C.'s** request to locate on the above site. Enclosed find the "Technical Data Application" used for applying to lease space at any of Western Wireless Corp.'s existing cellular towers.

Please complete appropriate information and return to:

Western Wireless Corp.
Attn: Kelly Lavery
3650 131st Avenue SE, Suite 400
Bellevue, WA 98006
Phone: 425-586-8725 Fax: 425-586-8050 Email: kelly.lavery@wwireless.com

This document was prepared as a "Form" which will allow you to complete it on your computer by simply tabbing to each line. **ALL SECTIONS MUST BE COMPLETED** (A separate document should be completed for each location).

The below fees are to be sent to the above address:

- "APPLICATION PROCESSING" fee of FIVE HUNDRED DOLLARS ($500.00) per location to be returned with completed " Preliminary Technical Application".
- "SITE WALK REGIONAL PROJECT MANAGEMENT" fee of ONE THOUSAND DOLLARS ($1,000.00) per location to be submitted at the time of "Lease Commencement" along with "Initial Monthly Rent".
- "DAILY PROJECT MANAGEMENT INSTALLATION" Fee of FIVE HUNDRED DOLLARS ($500.00) per location to be submitted with "Post Construction Site Walk" & Actual as-built Drawings.

(1) Non-Refundable.
(2) Credited to the non-recurring charge.

Please note that Western Wireless primarily prefers to install and construct work associated with its WWC tower facilities and is the discretion of the Regional Project Manager's approval at the time of scheduled "Preliminary Site Walk". WWC will provide you with a list of approved contractors if you choose.

We at Western Wireless look forward to working together. Should you have any questions, feel free to contact me at the numbers listed above. Once again, thank you.

Sincerely,

Kelly

Kelly S. Lavery
National Collocation Coordinator

RECEIVED
DEC 14
LINCOLN CITY/LANCASTER COUNTY
PLANNING DEPARTMENT

Applicant: Qwest Wireless, L.L.C. Application Date: 12/8/00 Applicant Site Number/Name: LIN021

western wireless

Western Wireless Regional Market: NELI Site Name: Fletcher Site Number: _____

Prime Lease WWC File Number: _____

TECHNICAL DATA APPLICATION

PRELIMINARY REVIEW

For consideration, Western Wireless ***REQUIRES*** the following information to evaluate collocation request:

- Sketch of tower indicating existing and proposed antennas (choose the most appropriate attached tower drawing to modify).
- Sketch of site compound indicating existing and proposed structures.
- Specification sheets/Pictures of antennas (including radiation pattern), mounting bracket(s), coaxial cable, and base station equipment & shelter.
- Completed "Site Access & Contact Form"

APPLICANT INFORMATION

Legal Company Name: **Qwest Wireless, L.L.C.** Company Contact: **Jill Bazzell**

Phone: **402-290-6533** Fax: **402-556-9992** Email: **jbazzel@uswest.com**

Mailing Address: **910 N. 43rd Ave., 2nd Floor** **Omaha** **NE** **68131**

Billing Address: **Same** AP Contact: **Ellie Billie** Phone: **402-556-9993** Email: **ebillie@uswest**

Site Number: **021** Site Reference Name: **LIN** Proposed Construction Start Date: **2/1/01**

SITE INFORMATION

Legal Address: _____ **County/State:** **Lancaster/NE** **FCC #:** _____ **FAA #:** _____

Tower Height: _____ **Tower Model:** _____ **Tower Manufacturer:** _____

Building Size: _____ **Latitude:** _____ **Longitude:** _____

ANTENNA INFORMATION

Qty	Mfg Model	Type (Tx)	Ant Lgth	Weight (lb)	Center Line (AGL)	Azimuth (deg)	Line Loss dB/100ft	Line Dia.	Feed Line Lgth (ft)	Frequencies (Rx)	Modulation
1	Ball PCS-DS-17-06507-2D	TX/ RX		13 lbs	120'	60	0	Fiber		1867.5 mhz	PCS CDMA
1	Ball PCS-DS-17-06507-2D	TX/ RX		13 lbs	120'	180	0	Fiber		1867.5 mhz	PCS CDMA
1	Ball PCS-DS-17-	TX/		13 lbs	80'	300		Fiber		1867.5 mhz	PCS CDMA

western wireless

	06507-2D	RX									

Transmission Line Manufacturer : _____ Type: _____ Diameter & Length: _____

Mounting Equipment Type: _____

EQUIPMENT INFORMATION

Manufacturer: **Ericsson** _____ Size of Equipment: _____

Sensitivity (uV): ____ Bandwidth (kHz): ____ Other Loss/ Gain (dB): ____ Spurious Rejection: ____ Modulation (kHz):

Frequency (MHz): ____ AC Power Voltage and Total Amperage: VAC ____ AMP____ RF Power Output: ____ Total ERP:

FCC type Acceptance Number: _____

Power Meter *Requested*: ☐ Yes ☐ No

Backup Generator *Requested*: ☐ Yes XNo

If no, Make, Model, KW Rating, Fuel Type and Source: _____

TENANT WILL BE REQUIRED TO OBTAIN AC POWER FROM THE LOCAL UTILITY COMPANY IF USING AN EXTERIOR SHELTER OR CABINETS.

Exterior Equipment? X Yes ☐ No
Shelter: ☐ Cabinets: X

Is Compound for Shelter Space Requested? ☐ Yes X No

Concrete Foundation Required: Length: _____ Width: _____ Square Footage: _____

Is Space Requested Inside WWC Shelter? ☐ Yes X No

Space Required: Length: _____ Width: _____ Square Footage: _____

Do you intend to provide your own Telco or Interconnect facilities? X Yes ☐ No

If no, please comment: _____

ADDITIONAL COMMENTS:

Note: Ericsson Model 1106 Micro BTS Equipment used. Please refer to attached sheets for dimensions. Three (3) Remote Units to be placed with antennas on the pole (Approx. 110 lbs per remote) with fiber and power connections to base equipment. No coax will be run up the pole. Base unit is 42" x 42" x 18", no additional ground equipment is used.

070

SITE NAME	
MARKET NAME	

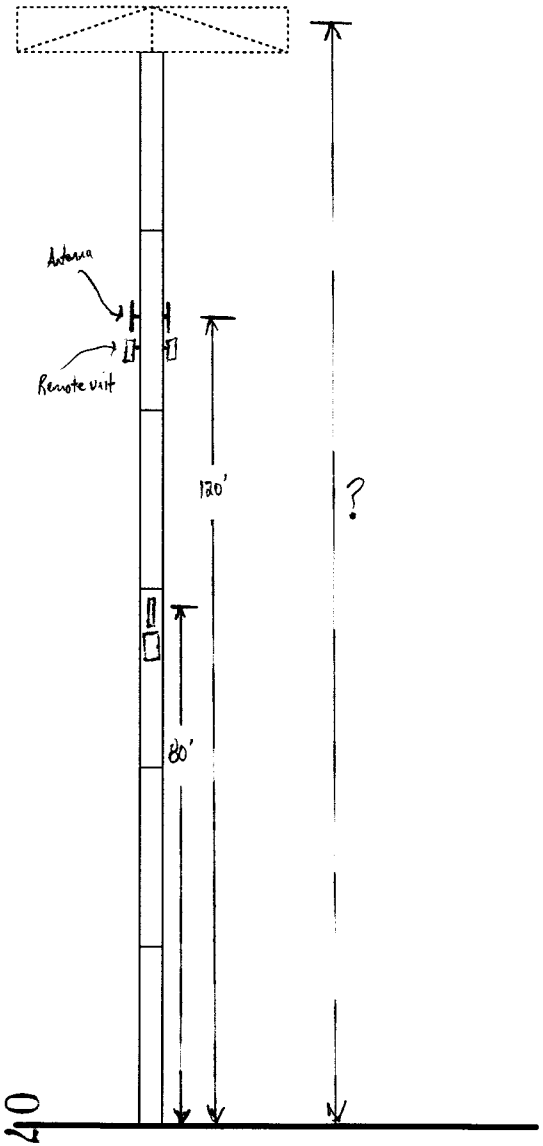

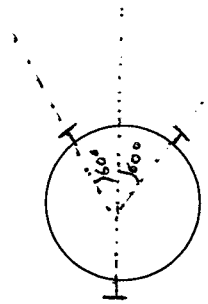

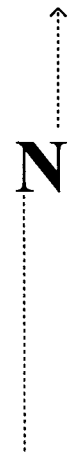

ANTENNA SYSTEMS INFORMATION	
Frequencies used	1867.5 MHz, 1947.5 MHz
ERP (Watts)	15W
Proposed co-location ht.	80', 120'
Antenna Model	Ball PCS-DS-17-06507-2D
Antenna Orientation	60°, 180°, 330°
Antenna Polarization	Dual Polarization 45°
Cable Type and Length	80' Fiber (x2), 120' Fiber (x4), 7/8" Coax (x6) → 6' Length
Distance from bldg.	

071

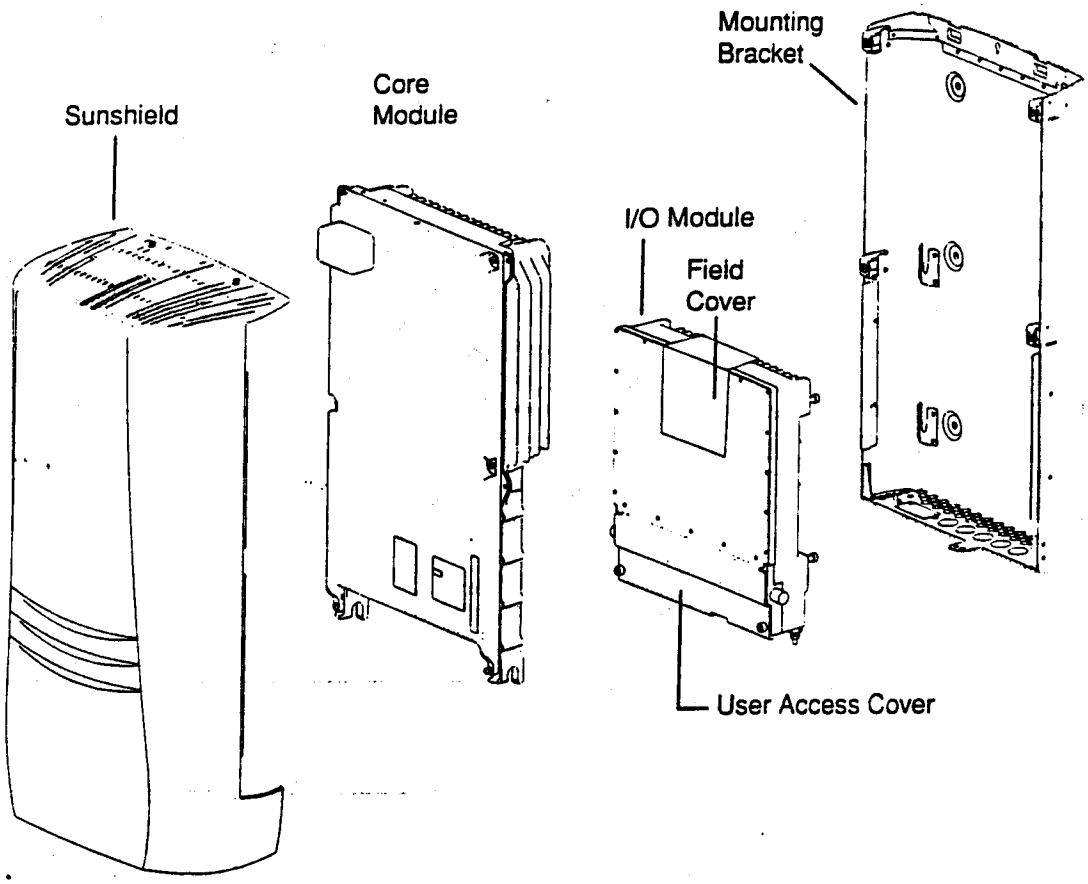

Figure 1–1 RBS Main Unit

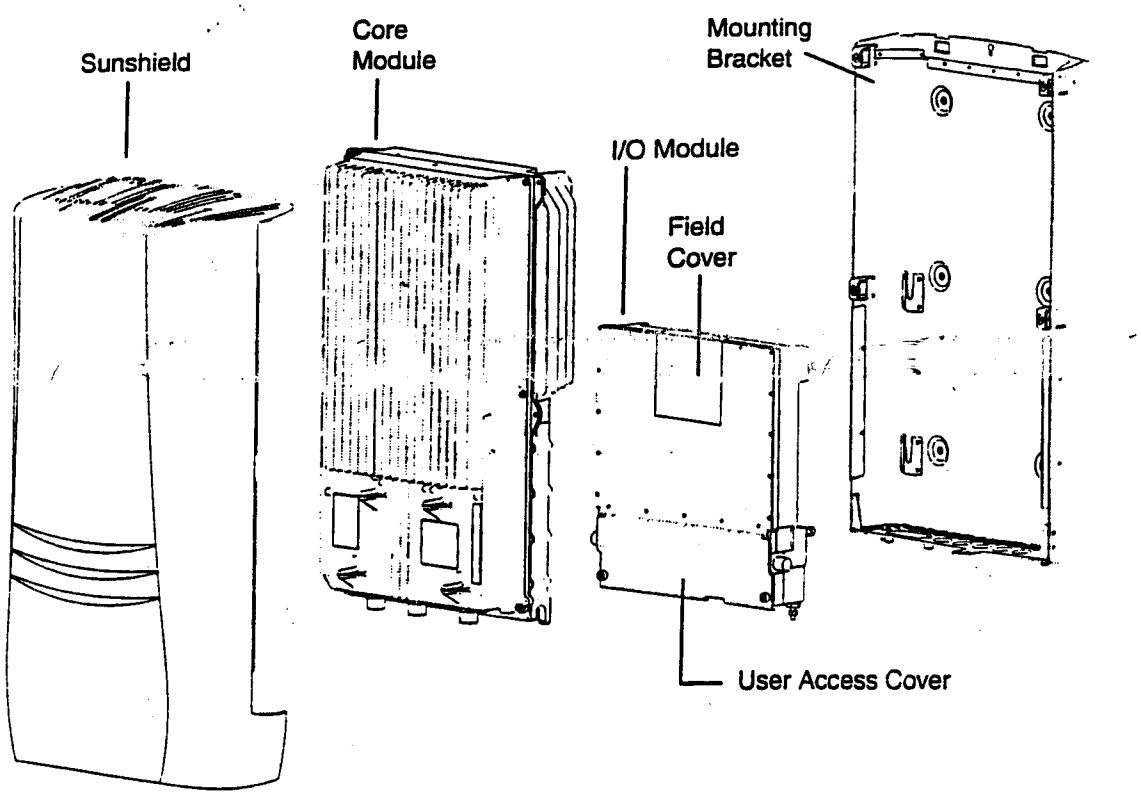

Figure 1–2 RBS Remote Unit

Specifications

• Dimensions with the sunshield • Required clearances	• 31" x 17" x 9 inches (79 cm x 43 cm x 23 cm) • 12 inches top, 18 inches bottom
Weight with the sunshield • Main unit • Remote unit • Long duration UPS • Short duration UPS	 • 88 lbs (40 kg) • 113 lbs (51.25 kg) • 706 lbs (320 kg) • 381 lbs (173 kg)
Frequency	1850-1910 MHz, 1930-1990 MHz
Transmission power	15 watts
• Power • Main unit • Remote unit • Total for three sectors • Circuit breaker • Backup power (Long duration UPS)	• 85/265 VAC, single cycle, 47 to 63 Hz • 175 watts • 250 watts • 925 watts • 30 A, class D • Alpha 1 kW UPS, 3.5 hour backup (NOVUS 1250 XT or equivalent)
Cooling (natural convection)	-40°F (-40°C) to 126°F (52°C)
Lightning and surge protection	Internal AC, RF, GPS, backhaul I/F; chassis ground
Mounting structure	Monopoles, communications towers, rooftop, wall mounting, interior, or exterior The mounting structure must be capable of supporting main, remote, and UPS. See weight above.

Technical Data Sheet

U S WEST Wireless has the following parameters in Nebraska:

PCS D block, actual channels used:	325, **350**, 375
MicroBTS Tx frequencies:	1946.25MHz, **1947.5MHz**, 1948.75MHz
MicroBTS Rx frequencies:	1866.25MHz, **1867.5MHZ**, 1868.75MHz
Modulation:	Direct Sequence Spread Spectrum
Standard:	J-STD-008 and J-STD-019
Maximum EIRP:	+56.7dBm (39.7dBm + 17dBi antenna gain)
Channel Bandwith:	1.2388MHz
Antenna Information:	Ball **PCS-DS-17-06507** or **PCS-VR-18-06507**

Antenna Size (PCS-DS-16-09007)
Gain = 16 dBi — 48" x 8.1" x 2.3"
Azimuth beam width = 90° | Weight ~ 10.2lb without
Elevation beam width = 7° | mounting hardware

Antenna Size (PCS-DS-17-06507)
Gain = 17 dBi — 48" x 7.2" x 2.3"
Azimuth beam width = 65° | Weight 10.2lb without
Elevation beam width = 7° | mounting hardware

Antenna Size (PCS-VR-18-06507)
Gain = 17.5 dBi — 48" x 7.3" x 2.2"
Azimuth beam width = 65° | Weight ~ 8lblb without
Elevation beam width = 7° | mounting hardware

Standard Antenna Configuration:

1 or 2 antennas per sector
Horizontal Spacing (if required) 4ft to 8 ft depending on antenna height

Governing FCC Rules:

Code of Federal Regulations
Title 47 (Telecommunications)
Part 15 and Part 24 (subpart E)

Out of Band Emissions:

Section 24.238 (a) On any frequency outside a licensee's frequency block, the power of any emission shall be attenuated below the transmitter power (P) by at least 43 + 10log(P)dB. This is an FCC requirement.
Below are the equipment specifications:

For A & D 20MHz (Partial Band) MicroBTS –
(Tx out of block spurious emissions shall meet)

150dBm/Hz for f<1850MHZ

	174dBm/Hz for f=1850MHz to f=1870MHz 150dBm/Hz for f>1870MHz to f=1910MHz 100dBm/Hz for f=2010MHz to f=3000Mhz
AC Power Requirements:	90/260 VAC, 47-63Hz, single phase, 925 Watts for a three sector-site
Nominal Dimension:	33" x 17" x 9¼"
(Main and Remote Units)	(1 Main unit and 3 remote units for a 3 sectored MicroBTS site)

VENDOR NAME: WESTERN WIRELESS CORPORATION

CHECK NO.: 0000338495

INVOICE/DESCRIPTION	DATE	INVOICE AMOUNT	*	TELE. NO.	REF. NO.
120400LIN021	12/04/2000	$500.00		651-642-6278	121815445
TOTAL		$500.00			

* DEDUCTION CODE DESCRIPTION:
FOR QUESTIONS, CALL COLLECT, # BY INVOICE.

Remove check along this perforation

THIS CHECK IS CLEARED THROUGH POSITIVE PAY

Qwest WIRELESS

DATE: 12/12/2000

NO. 0000338495
64-1278
611

Five Hundred and NO/100 Dollars

Bank of America
Bank of America Customer Connection
Bank of America, N.A.
Atlanta, Dekalb County, Georgia

PAY **********$500.00
VOID AFTER 6 MONTHS

TO THE ORDER OF WESTERN WIRELESS CORPORATION
3650 131ST AVE SE STE 400

BELLVUE WA 98006

AUTHORIZED SIGNATURE

⑈0000338495⑈ ⑆061112788⑆ 3299962631⑈

USWEST is now Qwest.
Qwest Wireless, L.L.C.
910 North 43rd Avenue 2nd Floor
Omaha, Nebraska 68131

RECEIVED
JAN 3 2001
LINCOLN CITY/LANCASTER COUNTY
PLANNING DEPARTMENT

January 3, 2001

City of Lincoln – Planning Department
Attn. Jennifer Dam
555 South 10th Street, Suite 213
Lincoln, NE 68508

RE: Special Use Permit #1892 – LIN021C

Dear Ms. Dam:

The enclosed is some new information to be included in the application for SP #1892. Please include these in the packets that the Planning Commission will have so they can reviewed prior to the Planning Commission hearing on January 10, 2001.

Thank you,

Jill Bazzell
Real Estate Consultant
Qwest Wireless, L.L.C.

Enclosures (8)

Subject: **Re: NELI Fletcher collocation Request from Qwest**
Date: Wed, 03 Jan 2001 09:18:01 -0800
From: Jill Bazzell <jbazzel@uswest.com>
Organization: SNELLING
To: "Lavery, Kelly" <Kelly.Lavery@wwireless.com>

[redacted]

Dear Kelly,

As per your request, I have enclosed an electronic copy of our application for co-lo tower located at 14th & Fletcher, site number NELI Fletcher, Lincoln Nebraska (Qwest

On October 23, Qwest requested some tower information from you to see if this site i co-locate on, but as of today, have not received any information. We need the Lat. elevation, tower calculations, foundation design, height of the tower and the height tower. I will also need the survey, or your zoning/construction drawings so we can drawings.

Last thing is the lease terms. I do not have any kind of rough draft lease or blank Western Wireless to see if we will even be able to negotiate an acceptable lease for has a blank lease form that we use on our sites, so if Western Wireless does not hav Qwests'. What is the lease rate on collocations?

I will need the tower information and the lease information before Qwest can proceed co-location. Time is of the essence.

Thank you,
Jill Bazzell

"Lavery, Kelly" wrote:

> *Dear Jill,*
> *Please see attached confirmation and note to send information*
> *electronically.*
> *Thank you.*
> *Kelly Lavery <<2. WWC Confirmation of Application.doc>> <<3. WWC External*
> *Collocation Process Guide.doc>>*
>
> ---
>
> *Name: 2. WWC Confirmation of Applicat*
> *2. WWC Confirmation of Application.doc Type: Microsoft Word Document (applic*
> *Encoding: base64*
>
>
> *Name: 3. WWC External Collocat*
> *3. WWC External Collocation Process Guide.doc Type: Microsoft Word Document*
> *Encoding: base64*

ww letter of request.doc	**Name:** ww letter of request.doc **Type:** Microsoft Word Document (application/msword) **Encoding:** base64

1. WWC Technical Data Application .doc	**Name:** 1. WWC Technical Data Application .doc **Type:** Microsoft Word Document (application/msword) **Encoding:** base64

078

1a. WWC Site Access & Contact Form.doc	**Name:** 1a. WWC Site Access & Contact Form.doc **Type:** Microsoft Word Document (application/msword) **Encoding:** base64

079

USWEST is now Qwest
Qwest Wireless, L.L.C.
910 North 43rd Avenue 2nd Floor
Omaha, Nebraska 68131

RECEIVED
JAN 17 2001
LINCOLN CITY/LANCASTER COUNTY
PLANNING DEPARTMENT

January 12, 2001

Kelly Lavery
National Collocation Coordinator
3650 131st Avenue, SE, Suite 400
Bellevue, WA 98006

RE: Co-location

Dear Ms. Lavery:

On January 2, 2001, Jennifer Dam of the Lincoln/Lancaster County Planning Department, told us that she had spoken to you and you informed her our co-location application for the site on 12th and Fletcher in Lincoln, Nebraska would be processed in three weeks. On January 10, Ms. Dam said you informed her that we should be having a site walk next week, and the application is being pushed through.

In October, we requested some information from you regarding the tower, but had not received anything. Again on January 3, 2001, we requested the same information regarding the tower and lease details. On Tuesday, January 9, 2001, I talked with Craig Vogt, who was surprised to learn we had not received any information. He said he would look into for me and let me know. I spoke with him again on Wednesday, January 10, 2001, when he told me he found the information I need on the tower and will priority overnight it to me. I now have the tower information I need to proceed, but no lease information. I did talk with Dorothy Kelly, but she can not forward any lease information to me.

If Qwest does not receive any lease information on this site by Friday, January 19, 2001, we will consider Western Wireless unwilling to negotiate a lease with us and will go elsewhere for a site.

Thank you,

Jill Bazzell
Real Estate Consultant
Qwest Wireless, L.L.C.

Bcc: Jennifer Dam, Lincoln/Lancaster County Planning Department

LAA LINCOLN AIRPORT AUTHORITY

January 24, 2001

Ms. Jennifer Dam
Planning Department
555 South 10th Street, #213
Lincoln, NE 68508

RE: Special Permit – #1892

Ms. Dam:

The Lincoln Airport Authority is not opposed, based upon information provided, to the proposed structure as specified in the material provided.

Thank you for the notice. Please call if you have any questions.

Sincerely,
AIRPORT AUTHORITY

Robert P. McNally
Deputy Director, Operations

MISC/Dam SP#1892 APPROVAL

Lincoln Municipal Airport P.O. Box 80407 Lincoln, NE 68501 (402) 474-2770 FAX: (402) 474-5917

AERONAUTICAL STUDY
No: 00-ACE-2626-OE

Federal Aviation Administration
Central Region, ACE-530
901 Locust
Kansas City, MO 64106

ISSUED DATE: 01/18/01

GARY E ALCHIN
QWEST WIRELESS LLC
1860 LINCOLN ST, 11TH FLOOR
DENVER, CO 80295

** DETERMINATION OF NO HAZARD TO AIR NAVIGATION **

The Federal Aviation Administration has completed an aeronautical study under the provisions of 49 U.S.C., Section 44718 and, if applicable, Title 14 of the Code of Federal Regulations, part 77, concerning:

Description: ANTENNA TOWER, FREQ/ERP 1.8625-1.970 GHZ AT 200 W

Location: LINCOLN NE
Latitude: 40-52-22.11 NAD 83
Longitude: 096-42-40.52
Heights: 125 feet above ground level (AGL)
1397 feet above mean sea level (AMSL)

This aeronautical study revealed that the structure does not exceed obstruction standards and would not be a hazard to air navigation provided the following condition(s), if any, is(are) met:

Based on this evaluation, marking and lighting are not necessary for aviation safety. However, if marking and/or lighting are accomplished on a voluntary basis, we recommend it be installed and maintained in accordance with FAA Advisory Circular 70/7460-1K.

This determination expires on 07/18/02 unless:

(a) extended, revised or terminated by the issuing office or
(b) the construction is subject to the licensing authority of the Federal Communications Commission (FCC) and an application for a construction permit has been filed, as required by the FCC, within 6 months of the date of this determination. In such case the determination expires on the date prescribed by the FCC for completion of construction or on the date the FCC denies the application.

NOTE: REQUEST FOR EXTENSION OF THE EFFECTIVE PERIOD OF THIS DETERMINATION MUST BE POSTMARKED OR DELIVERED TO THIS OFFICE AT LEAST 15 DAYS PRIOR TO THE EXPIRATION DATE.

This determination is based, in part, on the foregoing description which includes specific coordinates, heights, frequency(ies) and power. Any changes in coordinates, heights, frequency(ies) or use of greater power will void this determination. Any future construction or alteration,

including increase in heights, power, or the addition of other transmitters, requires separate notice to the FAA.

This determination does include temporary construction equipment such as cranes, derricks, etc., which may be used during actual construction of the structure. However, this equipment shall not exceed the overall heights as indicated above. Equipment which has a height greater than the studied structure requires separate notice to the FAA.

This determination concerns the effect of this structure on the safe and efficient use of navigable airspace by aircraft and does not relieve the sponsor of compliance responsibilities relating to any law, ordinance, or regulation of any Federal, State, or local government body.

A copy of this determination will be forwarded to the Federal Communications Commission if the structure is subject to their licensing authority.

If we can be of further assistance, please contact our office at 816-329-2524. On any future correspondence concerning this matter, please refer to Aeronautical Study Number 00-ACE-2626-OE.

Brenda S. Mumper (DNE)
Brenda S. Mumper
Specialist, Operations & Airspace Branch

SUBMITTED AT CONTINUED PUBLIC HEARING
BEFORE PLANNING COMMISSION BY
QWEST WIRELESS on 1/24/01

SPECIAL PERMIT NO. 1892

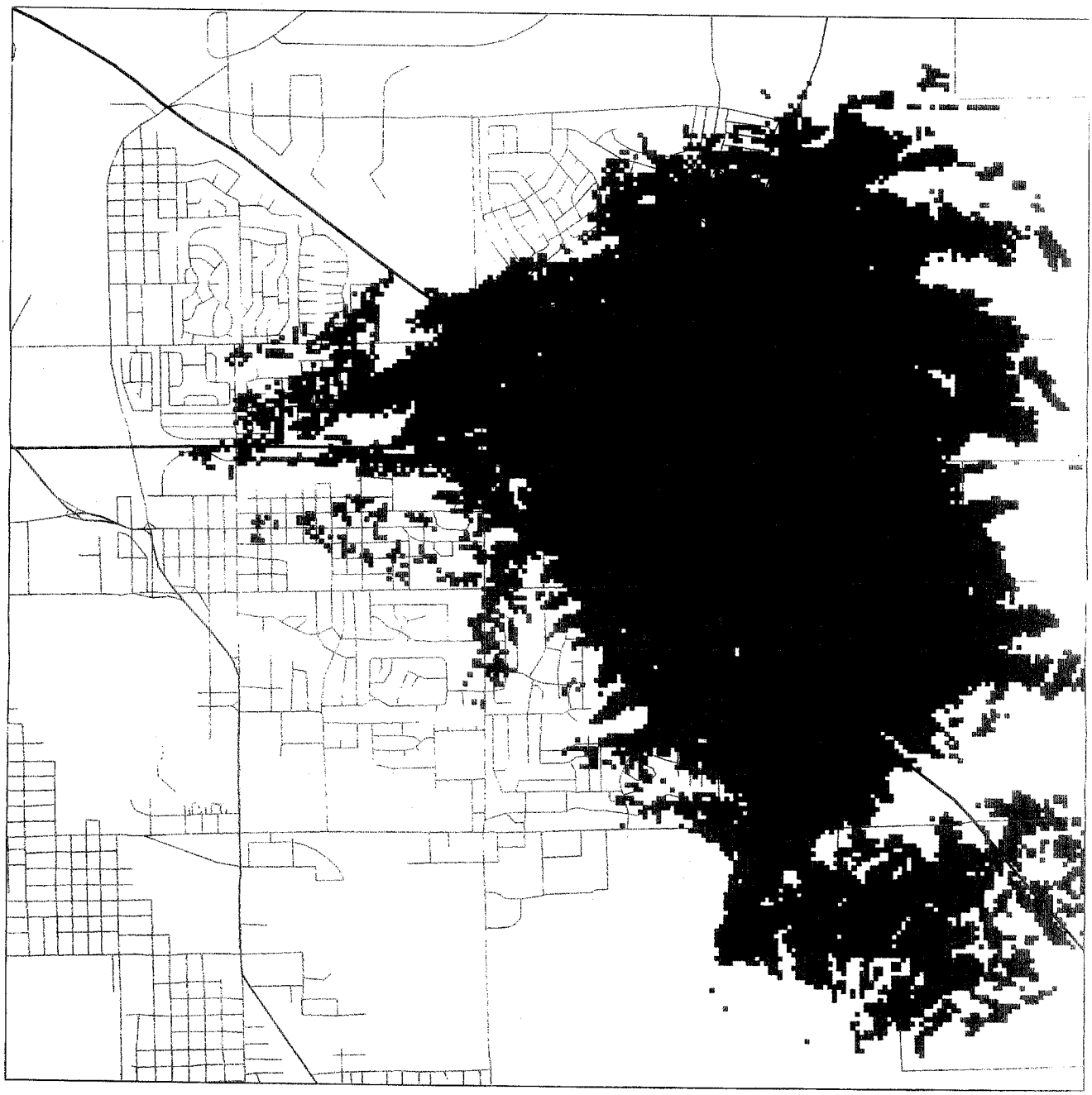

PLANET V2.8
Metapath Software International Inc
Tue Jan 23 10:21:38 2001
Qwest proposed site coverage

Centre Long: 96 42'15.0"W Lat: 40 51'40.9"N
Scale: 1:26579
Other_Road_Feature
Connecting_Road
Neighborhood_Road
Primary_Road
Secondary_Road
Coverage
Coverage Level: -82dBm

LIN021

SUBMITTED AT CONTINUED PUBLIC HEARING
BEFORE PLANNING COMMISSION BY
QWEST WIRELESS on 01/24/01

SPECIAL PERMIT NO. 1892

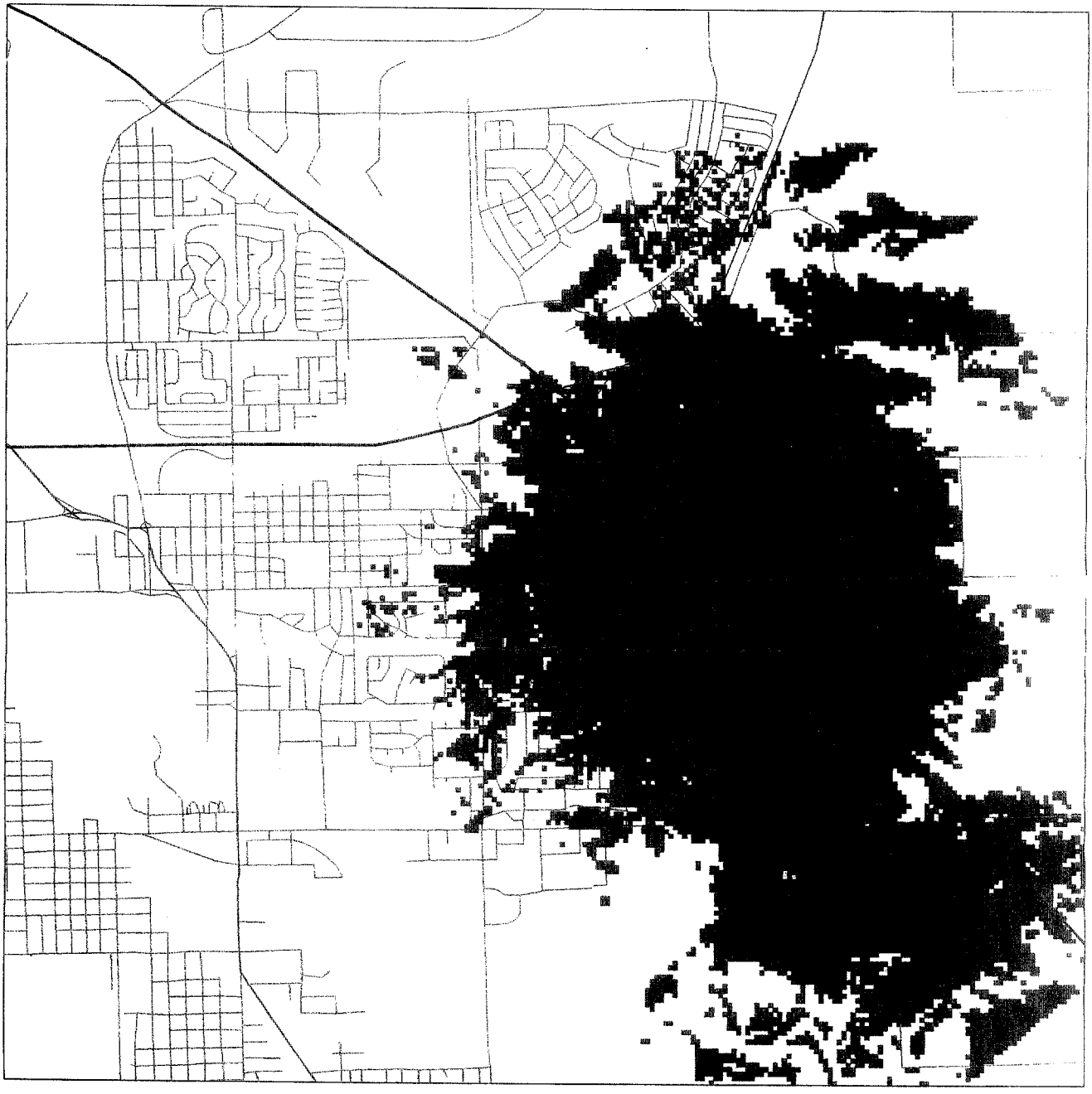

PLANET V2.8
Metapath Software International Inc
Tue Jan 23 10:20:22 2001
Western Wireless Colocation coverage

Centre Long: 96 42'15.0"W Lat: 40 51'40.9"N
Scale: 1:26579
Other_Road_Feature
Connecting_Road
Neighborhood_Road
Primary_Road
Secondary_Road
Coverage
Coverage Level: -82dBm

LN0277

085

IN OPPOSITION

ITEM NO. 3.2: ~~SPECIAL PERMIT NO. 1892~~
(p.57 - Public Hearing - 01/10/01)

January 10, 2001

RE: Permit 1892 to be reviewed at 1:00pm on January 10, 2001
Lot 32, Cumberland Heights, T11N, R6E at 7th & Fletcher Ave.

Attention: Lincoln Lancaster County Planning Department

We are property owners at 535 Pennsylvania Avenue and would like to express our arguments against permit 1892, which permits a new Qwest wireless facility at the location of Lot 32 Cumberland Heights located in the SW quarter of Sec 35.

We believe that the Qwest wireless facility should be placed on an already existing tower rather than destroy our landscape with several different towers for each individual company. We feel they should combine them for the good of the city and also the good of our neighborhood. We already have three large towers within a mile of each other in our area and we do not need another one to look at within blocks of each other. There should be another alternative to this and our suggestion is to combine more than one cellular service on an existing tower. We are property owners and we feel that more cellular towers will not enhance the beauty of our neighborhood. As taxpayers and good citizens, we wish for our voices to be heard. Please keep the City of Lincoln a good place to make our home and keep the towers to a minimum.

Larry and Denise Maack
535 Pennsylvania Ave.
Lincoln NE 68521

Larry & Denise Maack

RECEIVED
JAN 10 2001
LINCOLN CITY/LANCASTER COUNTY
PLANNING DEPARTMENT

IN OPPOSITION:

ITEM NO. 4.1: SPECIAL PERMIT NO. 1892
(p.57 - Cont'd Public Hearing - 1/24/01)

January 18, 2001

RE: Permit 1892 to be reviewed at 1:00pm on January ~~10~~ 24, 2001
Lot 32, Cumberland Heights, T11N, R6E at 7th & Fletcher Ave.

Attention: Lincoln Lancaster County Planning Department

We are property owners in the area of 7th and Fletcher and would like to express our arguments against permit 1892, which permits a new Qwest wireless facility at the location of Lot 32 Cumberland Heights located in the SW quarter of Sec 35.

We believe that the Qwest wireless facility should be placed on an already existing tower rather than destroy our landscape with several different towers for each individual company. We feel they should combine them for the good of the city and also the good of our neighborhood. We already have three large towers within a mile of each other in our area and we do not need another one to look at within blocks of each other. There should be another alternative to this and our suggestion is to combine more than one cellular service on an existing tower. We are property owners and we feel that more cellular towers will not enhance the beauty of our neighborhood. As taxpayers and good citizens, we wish for our voices to be heard. Please keep the City of Lincoln a good place to make our home and keep the towers to a minimum.

Larry + Denise Maack - 535 Pennsylvania Ave.
Mary Munigaard, 6320 N. 7th St.
Jeanne Munigaard 6320 No. 7th St.
[illegible] 6500 No. 7th
James E. Olston 6401 No 7 ST
Vern K & Rosetta Agena
Glenn and Lois Umberger
Joan Shirley Swift
Arlon E. Bartels
Jim & Kathi Nuttleman
Erin Pettig
[illegible] & Dora Johnson

RECEIVED
JAN 24 2001
LINCOLN CITY/LANCASTER COUNTY
PLANNING DEPARTMENT

087

January 18, 2001

RE: Permit 1892 to be reviewed at 1:00pm on January ~~10~~, 2001
Lot 32, Cumberland Heights, T11N, R6E at 7th & Fletcher Ave.

Attention: Lincoln Lancaster County Planning Department

We are property owners in the area of 7th and Fletcher and would like to express our arguments against permit 1892, which permits a new Qwest wireless facility at the location of Lot 32 Cumberland Heights located in the SW quarter of Sec 35.

We believe that the Qwest wireless facility should be placed on an already existing tower rather than destroy our landscape with several different towers for each individual company. We feel they should combine them for the good of the city and also the good of our neighborhood. We already have three large towers within a mile of each other in our area and we do not need another one to look at within blocks of each other. There should be another alternative to this and our suggestion is to combine more than one cellular service on an existing tower. We are property owners and we feel that more cellular towers will not enhance the beauty of our neighborhood. As taxpayers and good citizens, we wish for our voices to be heard. Please keep the City of Lincoln a good place to make our home and keep the towers to a minimum.

William M. Wessey
Mary K. Reed
[illegible]
Dougl E [illegible]

Eldon Pettig
300 Pennsylvania Ave

RECEIVED
JAN 24 2001
LINCOLN CITY/LANCASTER COUNTY
PLANNING DEPARTMENT

January 25, 2001

Lincoln-Lancaster Planning Dept.
555 So 10th Street
Lincoln, NE 68508

To whom it may concern:

I OPPOSE the new zoning on 7th and Fletcher, regarding a new Cellular tower being built.

The location requested for the Cellular tower consist of acreages and would be to close to the homes of the adjoining neighbors.

Please try to work with the existing Cellular towers that are already located around this area, but does not affect the acreage homes.

Thank you
Rich & Chris Grundman
Chris Grundman