USER: MEGAN STARNER
DATE: 6/12/2007
DGN: 701014CC01.dgn

THE SCHEMMER ASSOCIATES

PROJECT NO.	SHEET NO.
701781	1
Date: 6/12/2007	Drawn: MDS
Horz. Scale No Scale	Checked: TAC
	Approved: TAC

TSA PROJECT NO. 04552.001 NDOR PROJECT NO. BR-5266(1); CN 12572

117-C-72

CITY OF LINCOLN, NE (2007)
O ST., 2nd ST. TO 9th ST. (HARRIS OVERPASS)
BRIDGE C.I.P. #701781
STATE PROJECT #BR-5266(1); C.N. 12572

Diggers Hotline Of Nebraska
Statewide (800) 331-5666
Call Before You Dig... Its The Law

PRIOR TO CONSTRUCTION:

CALL : 1-800-331-5666 FOR LOCATION OF UNDERGROUND TELEPHONE, ELECTRIC, GAS MAINS, CABLEVISION AND CITY OF LINCOLN UTILITIES.

NOTE: EXISTING UNDERGROUND AND OVERHEAD UTILITIES AND DRAINAGE STRUCTURES HAVE BEEN PLOTTED FROM AVAILABLE INFORMATION AND THEREFORE, THEIR LOCATIONS MUST BE CONSIDERED APPROXIMATE ONLY. IT IS THE RESPONSIBILITY OF THE INDIVIDUAL CONTRACTORS TO EXACTLY LOCATE AND PROTECT EACH EXISTING UTILITY BEFORE AND DURING ACTUAL CONSTRUCTION.

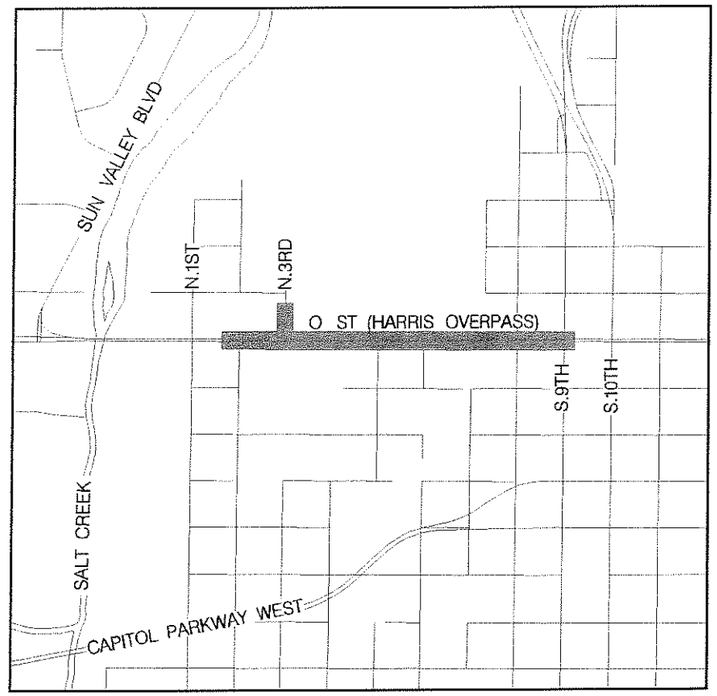

NOT TO SCALE

SHT NO.	SHEET INDEX
1	COVER
2-3	SUMMARY OF QUANTITES
4-5	TYPICAL SECTIONS
6	GENERAL NOTES
7-22	DETAILS
23	HORIZONTAL CONTROL
24-28	GEOMETRICS
29-31	DETOUR
32-36	SEDIMENT AND EROSION CONTROL
37-40	JOINTS AND GRADES
41-46	ROADWAY PLAN AND PROFILE
47-51	CONSTRUCTION
52-56	REMOVAL
57-60	STORM DRAINAGE PLAN
61-63	STORM DRAINAGE PROFILE
64	WASTE WATER PLAN AND PROFILE
65-71	WATER MAIN PLAN
72-79	TRAFFIC SIGNAL AND LIGHTING (CONCRETE)
80-87	TRAFFIC SIGNAL AND LIGHTING (STEEL)
88-95	TRAFFIC SIGNAL AND LIGHTING DETAILS
96-102	PAVEMENT MARKING AND SIGNING
103-109	RIGHT-OF-WAY
110-117	ROADWAY CROSS SECTIONS
118-179	BRIDGE (PRESTRESSED CONCRETE "I" GIRDER)
180-248	BRIDGE (WELDED PLATE GIRDER)
249-259	ARCHITECTURAL DETAILS

PROJECT CONTACT

ENGINEERING SERVICES:
531 WESTGATE BLVD.
LINCOLN, NE 68528
ATTN: KRIS HUMPHREY....441-7592

ENGINEERING SERVICES:
TRAFFIC OPERATIONS
531 WESTGATE BLVD.
LINCOLN, NE 68528
ATTN: SCOTT OPFER....441-7851

PARKS DEPARTMENT
2740 'A' ST.
LINCOLN, NE 68502
ATTN: MARK CANNEY....441-8248

UNITE
3310 N. 56TH STREET
LINCOLN, NE 68504
ATTN: JOE MELVIN....402-617-4787

WINDSTREAM
401 S. 21ST ST.
LINCOLN, NE 68510
ATTN: KEN ADAMS...436-5794

AQUILA
1600 WINDHOEK DR.
LINCOLN, NE 68512
ATTN: PAT BARTEK....437-1787

LINCOLN ELECTRIC SYSTEM
P.O. BOX 80869
LINCOLN, NE 68501
ATTN: PAUL CEPURE....467-7618

TIME WARNER CABLE
5400 SO. 16TH ST.
LINCOLN, NE 68512
ATTN: LOU KIPPER....421-0393

NDOR
1500 HIGHWAY 2
PO BOX 94759
LINCOLN, NE 68509
MARK TRAYNOWICZ...471-0850 EXT 1069

QWEST COMMUNICATIONS
5799 BROADMOOR ST.
MISSION, KS 66202-2403
ATTN: BRIAN CORNISH....(913) 676-3927

MCI, INC.
5857 N. 60TH STREET
OMAHA, NE 68104
BOB WARMAN....(402) 573-2043

BURLINGTON NORTHERN/SANTA FE RAILROAD
201 N. 7TH STREET
LINCOLN, NE 68050
ATTN: MIKE SCHAEFER....(402) 458-7379 OFFICE
304-1437 CELL

UNION PACIFIC RAILROAD COMPANY
1400 DOUGLAS STREET - STOP 0910
OMAHA, NE 68179
ATTN: PAT HALSTEAD....(402) 544-2029

REVISION NO.	PLAN SHEETS	DATE
R1	1, 2, 3, 11, 12, 14, 59 73, 81	12 JUN 07

OTHER PROFESSIONALS WITH SEALS WITHIN
JEFFREY J. HAASE - TRAFFIC AND LIGHTING
TODD A. COCHRAN - ROADWAY
DOUGLAS G. HOLLE - RIGHT-OF-WAY
ROGER J. WOZNY - ELECTRICAL
RICHARD B. TOREN - ARCHITECT

PROFESSIONAL STRUCTURAL ENGINEER
STEPHEN D. KATHOL
E-9095
STATE OF NEBRASKA

6/14/07
COORDINATING PROFESSIONAL

APPROVED FOR CONSTRUCTION

Thomas S. Shafer 6/19/07
CITY ENGINEER'S OFFICE DATE

117-C-72

USER: MEGAN STARNER
DATE: 6/14/2007
DGN: 701045C01.dgn

GENERAL ITEMS

0.2000	CONSTRUCTION STAKING	L. S.	1
0.4000	MOBILIZATION	L. S.	1
15.0001	TRAFFIC CTRL FOR CONST	L. S.	1
50.0060	DYNAMIC MESSAGE SIGN	CDAY	150

GRADING ITEMS

1.0100	PAVT & SIDEWALK REM	CU. YD.	4,523
1.0170	ADJ MH TO GRADE, CMPL	EA.	11
1.0180	ADJ WATER VALVE BOX TO GRADE, COMPLETE	EA.	5
1.0190	STD MONUMENT BOX, (IN PLACE)	EA.	2
1.0210	TY 'A' SAWING	L.F.	1,070
1.0220	TY 'B' SAWING	L.F.	704
1.0230	TY 'C' SAWING	L.F.	611
2.0010	GEN CLEARING & GRUBBING	L. S.	1
2.0100	EARTH EXCAVATION	CU. YD.	2,869
2.0110	EARTH BORROW MEASURED IN EMBANKMENT (E.Q.)	CU. YD.	3,892
50.0001	REM DECORATIVE POST	EA.	4
50.0001	REM BOLLARD	EA.	8
50.0005	REMOVE RETAINING WALL	L.F.	751
50.0010	EXCAVATION BORROW	CU. YD.	1,023
50.0015	REMOVE AND RESET BUS BENCH	L.S.	1
50.0015	REMOVE BRIDGE STRUCTURE AND PIERS	L.S.	1
50.0015	INTERMEDIATE FOUNDATION IMPROVEMENTS	L.S.	1
50.0015	INTERMEDIATE FOUNDATION IMPROVEMENTS VERIFICATION PROGRAM	L.S.	1
50.0035	HAULING CONTAMINATED SOIL	TON	735 R1

PAVING ITEMS

1.0160	ASPH CONC FOR PARKING AREA	TON	310
3.0060	9" PCC PAVT W/INT CURB	SQ. YD.	10,632
3.0140	9" RPCC PAVT	SQ. YD.	1,563
6.0020	COMBINED CURB & GUTTER	L.F.	873
6.0030	CONC BARRIER CURB (9"x20")	L.F.	106
6.0050	CONC MEDIAN NOSE, (IN PLACE)	EA.	2
6.0060	CONC MEDIAN SURFACING	L.F.	398
7.0020	4" CONC SIDEWALK	SQ. FT.	31,828
7.0030	6" CONC DRIVEWAY	SQ. FT.	5,200
7.0045	5" CONC BIKEWAY	SQ. FT.	4,867
7.0100	BUILD DETECTABLE WARNING PANELS	SQ. FT.	256
10.0010	CRUSHED ROCK SURFACING, (IN PLACE)	TON	48
50.0010	REM AND REPL 18" CONCRETE SLAB	C.Y.	20
50.0035	6" AC PAVT, CLASS 2	TON	262
50.0035	TEMPORARY ASPHALT	TON	232
50.0045	4" STAMPED CONC MEDIAN SURFACING	SQ. FT.	2,908
50.0045	6" CONC DRIVEWAY (L5500)	S.F.	629
50.0045	REM AND REPL BRICK SIDEWALK	S.F.	443

STORM DRAINAGE ITEMS

21.0090	24" RCP STORM SEWER, CL. III	L. F.	385
21.0095	21" RCP STORM SEWER, CL. III	L. F.	79
21.0100	18" RCP STORM SEWER, CL. III	L. F.	~~445~~ 484 R1
21.0110	15" RCP STORM SEWER, CL. III	L. F.	~~255~~ 66 R1
21.0770	72" STORM SEWER INLET, (CMPL)	EA.	7
21.0780	72" CANTED STORM SEWER INLET, (CMPL)	EA.	4
21.0850	GRATE INLET, TY "H" (CMPL)	EA.	2
21.0895	STORM SEWER MANHOLE, 15"-30", (CMPL)	EA.	6
21.1040	CONVERT INLET TO MH (CMPL)	EA.	2
21.1050	TAP EX STORM SEWER MH AND REPLACE	EA.	1
21.1060	TAP EX STORM SEWER INLET AND REPLACE	EA.	2
21.1080	TAP EX RC BOX	EA.	1
21.1290	REM 24" STORM SEWER PIPE	L.F.	103
21.1310	REM 18" STORM SEWER PIPE	L.F.	40
21.1325	REM 12" STORM SEWER PIPE	L.F.	296
21.1700	REM STORM SEWER MH (CMPL)	EA.	2
21.1710	REM EX INLET (CMPL)	EA.	3
21.1870	2' RC LOW FLOW LINER	L.F.	6
22.0740	CONC FOR PLUGS AND COLLARS (IN PLACE)	C.Y.	0.82
22.0790	FILL AND ABANDON EX MH (CMPL)	EA.	2
50.0001	SPECIAL GRATE INLET AT STA. 9+66.50	EA.	1
50.0005	12" PVC STORM SEWER	L.F.	56
50.0005	12" RCP STORM SEWER, CL. III	L.F.	150 R1

TRAFFIC SIGNAL ITEMS

24.0157	REM CABINET, CMPL.	EA.	1
24.0807	PB-9	EA.	5
24.0810	PB-FOR27	EA.	12
24.0823	RISER, 4"	EA.	4
24.0897	CONDUIT, 4" B	L. F.	660
24.0904	CONDUIT, 2" T	L. F.	1,045
24.0905	CONDUIT, 3" T	L. F.	175
24.0906	CONDUIT, 4" T	L. F.	1,748
24.0920	CONDUIT SOCK, 3" 3 CELL	L. F.	4,023
24.0992	CABLE, EMERGENCY DETECTOR	L. F.	1,349
24.1029	JUNCTION BOX, 2'x2'	EA.	1
24.1035	FIBER, 12 SM	L. F.	4,165
24.1050	TRACER WIRE	L. F.	2,667
24.1054	CABLE, NO 6 SERVICE	L. F.	1,070
24.1380	GROUND ROD, 10'	EA.	8
24.1422	SL POLE, SL-A-C-35-6-3	EA.	1
24.5206	INST DMS SUPPORT POLE	EA.	2
24.6003	INST CABINET, B	EA.	3
24.6004	INST CABINET, C	EA.	1
24.6007	INST CABINET, F	EA.	1
24.6020	LOCATE STICK	EA.	3
24.6204	INST AND ADJ EMERGENCY RECEIVER	EA.	1
24.6207	INST WEATHER STATION	EA.	1
24.6209	INSTALL DMS	EA.	2
50.0001	INSTALL PAVEMENT WEATHER SENSOR	EA.	2
50.0001	INSTALL SUBSURFACE TEMP. PROBE	EA.	1
50.0001	JUNCTION BOX, TYPE B	EA.	2
50.0005	INSTALL SURFACE SENSOR EXTENSION CABLE, TYPE V	L.F.	1,304
50.0015	FIBERGLASS CONDUIT SYSTEM	L.S.	1

STREET LIGHT ONLY ITEMS

			CONC.	STEEL
24.0102	REM SL, CMPL	EA.	1	1
24.0223	REL SL POLE, CMPL (REQ FOUND)	EA.	1	1
24.0804	PB-6	EA.	4	4
24.0820	RISER, 1 1/2"	EA.	5	5
24.0821	RISER, 2"	EA.	7	7
24.0894	CONDUIT, 1 1/2" B	L. F.	334	334
24.0903	CONDUIT, 1 1/2" T	L. F.	3,913	3,913
24.1063	CABLE, NO 4 CG	L. F.	1,014	1,014
24.1064	CABLE, NO 6 CG	L. F.	10,614	10,614
24.1065	CABLE, NO 8 CG	L. F.	4,301	4,301
24.1071	CABLE, NO 2 SL	L. F.	2,270	2,270
24.1072	CABLE, NO 4 SL	L. F.	20,800	20,800
24.1073	CABLE, NO 6 SL	L. F.	8,232	8,232
24.1514	INST LUMINAIRE, 400W HPSV-SC	EA.	1	1
50.0001	110V SERVICE ASSEMBLY	EA.	2	2
50.0001	220V SERVICE ASSEMBLY	EA.	1	1
50.0001	SPECIAL STREET LIGHT, TYPE A	EA.	34	34
50.0001	SPECIAL STREET LIGHT, TYPE B	EA.	2	2
50.0001	SPECIAL STREET LIGHT, TYPE C	EA.	44	44
50.0001	SPECIAL STREET LIGHT, TYPE D	EA.	16	16
50.0001	SPECIAL STREET LIGHT, TYPE E	EA.	18	16
50.0001	SPECIAL STREET LIGHT, TYPE F	EA.	34	32
50.0001	SPECIAL STREET LIGHT, TYPE G	EA.	12	12
50.0001	SPECIAL STREET LIGHT, TYPE H	EA.	4	4
50.0001	SPECIAL STREET LIGHT, TYPE J	EA.	24	24
50.0001	SPECIAL STREET LIGHT, TYPE K	EA.	2	2
50.0001	JUNCTION BOX, TYPE A	EA.	141	137
50.0001	JUNCTION BOX, TYPE C	EA.	4	4
50.0001	JUNCTION BOX, TYPE D	EA.	24	24
50.0001	LIGHTING CONTROL SYSTEM	EA.	3	3
50.0001	REL WOOD POLE	EA.	3	3
50.0005	CABLE, NO. 1/0 SL	L.F.	1,880	1,880
50.0005	CABLE, NO. 2 CG	L.F.	619	619
50.0005	CONDUIT, 1 1/2" IN BRIDGE	L.F.	12,104	12,104
50.0005	CONDUIT, 1 1/2" UNDER BRIDGE	L.F.	982	982

R1 12 JUN 07

PROFESSIONAL CIVIL ENGINEER
TODD A. COCHRAN
E-10610
STATE OF NEBRASKA

6-12-07

SUMMARY OF QUANTITIES 117-C-72

USER: MEGAN STARNER
DATE: 6/13/2007
DGN: 701D145C02.dgn

PAVEMENT MARKING & SIGNING ITEMS

13.0275	PAINT MKG, 4" W	L. F.	2,997
13.0280	PAINT MKG, 8" W	L. F.	11
13.0430	POLYUREA MKG, 4" Y	L. F.	893
13.0431	POLYUREA MKG, 4" W	L. F.	2,175
13.0432	POLYUREA MKG, 8" W	L. F.	46
13.0436	POLYUREA MKG, 24" W	L. F.	270
13.0560	RAISED PAVEMENT MARKERS	EA.	2
14.0001	TRAFFIC SIGN, < 4 SQ FT	EA.	29
14.0003	TRAFFIC SIGN, 4 SQ FT < 9 SQ FT	EA.	16
14.0005	TRAFFIC SIGN, 9 SQ FT >	EA.	2
14.0007	"U" CHANNEL SIGN POSTS	L.F.	240
14.0009	STREET NAME (ROUND) POSTS	L.F.	42
14.0017	TUBULAR MARKER	EA.	1

MISCELLANEOUS ITEMS

8.0010	REINF STL FOR STEPS & RETAIN WALLS (IN PLACE)	LBS	1,126
8.0020	CONC FOR STEPS & RETAIN WALLS (IN PLACE)	C.Y.	5
9.0010	72" CHAIN LINK FENCE (IN PLACE)	L.F.	419
9.0070	48" PIPE RAILING FENCE (IN PLACE)	L.F.	312
50.0001	INST 6" BOLLARD	EA.	3
50.0001	FOUNDATION FOR CONCRETE LIGHT PEDESTAL	EA.	4
50.0005	COPING	L.F.	~~971~~ 516 RI
50.0005	CONCRETE LEVELING PAD	L.F.	~~961~~ 872 RI
50.0005	PEDESTRIAN BARRIER RAIL ON ROADWAY	L.F.	244
50.0005	CMP SLEEVES	L.F.	335
50.0005	PEDESTRIAN RAILING ON ROADWAY (SPECIAL TYPE B)	L.F.	233
50.0005	COVERED PEDESTRIAN WALKWAY	L.F.	1,100
50.0010	SELECT GRANULAR BACKFILL FOR MSE WALL	C.Y.	3,832
50.0010	CLASS 47BD-4000 CONCRETE FOR CONCRETE RAIL ON ROADWAY (IN PLACE)	C.Y.	106
50.0015	CONCRETE COATING FOR CONCRETE RAILS ON ROADWAY	L.S.	1
50.0015	CONCRETE COATING FOR MARKERS ON ROADWAY	L.S.	1
50.0015	CONCRETE COATING FOR LIGHT PEDESTALS ON ROADWAY	L.S.	1
50.0015	CONCRETE COATING FOR MSE WALLS ON ROADWAY	L.S.	1
50.0015	CONCRETE COATING FOR COPING ON ROADWAY	L.S.	1
50.0015	CONCRETE COATING FOR STAMPED MEDIAN ON ROADWAY	L.S.	1
50.0025	EPOXY COATED REINF STL FOR CONCRETE RAIL ON ROADWAY (IN PLACE)	LBS	34,315
50.0045	CONCRETE FACE PANELS	S.F.	11,655

EROSION CONTROL ITEMS

30.0050	SEEDING, TY "B"	AC.	0.83
32.0040	SYNTHETIC FABRIC SILT FENCE INST	L. F.	2,415
32.0050	SYNTHETIC FABRIC SILT FENCE MAINT	L. F.	2,415
32.0070	INST STORM DRAIN INLET PROTECTION	EA.	15
32.0080	STORM DRAIN INLET PROTECTION MAINT	EA.	15
50.0035	TEMPORARY CRUSHED ROCK SURFACING	TON	247

ARCHITECTURAL ELEMENTS

50.0001	LANDING MARKER CAST CAP STONE	EA.	2
50.0001	BRIDGE ENTRANCE MARKER CAST CAP STONE	EA.	2
50.0001	BRIDGE ENTRANCE MARKER CAST CAP STONE CORNICE	EA.	2
50.0010	47BD-4000 CONCRETE FOR MARKERS AND LIGHT PEDESTALS	C.Y.	81
50.0025	EPOXY COATED STEEL FOR MARKERS AND LIGHT PEDESTALS	LB.	9,931
50.0045	LIMESTONE VENEER	S.F.	16

WATER MAIN REPLACEMENT ITEMS

23.0008	6" WATER MAIN	L. F.	111
23.0350	6"x6" TAPPING SLEEVE & VALVE, M.J.	EA.	1
23.0460	6" GATE VALVE, M.J.	EA.	5
23.0490	HYDRANT, CMPL L=5.5'	EA.	3
23.0492	HYDRANT, CMPL L=6.5'	EA.	2
23.0530	6" RETAINER GLANDS, M.J.	EA.	5
23.0538	6" x 90 DEG BEND, M.J.	EA.	1
23.0546	6" x 45 DEG BEND, M.J.	EA.	1
23.0594	6" ANCHORING COUPLING, M. J. (L=18")	EA.	5
23.0665	CONC FOR THRUST BLOCKS & ANCHORAGES (IN PLACE)	CU. YD.	1.64
23.0670	REINF STL FOR THRUST BLOCKS & ANCHORAGES	LBS	50
23.0685	RECONSTRUCT WATER SERVICE	EA.	2
23.0690	LOOP WATER SERVICE	EA.	2
23.0695	2" COPPER WATER SERVICE PIPE	L.F.	20
23.0710	1" COPPER WATER SERVICE PIPE	L.F.	20
23.0715	0.75" COPPER WATER SERVICE PIPE	L.F.	30
23.0935	REM 10" WATER MAIN	L.F.	242
23.0960	REM & SALVAGE HYDRANT (CMPL)	EA.	2
23.1000	REM & SALVAGE GATE VALVE & BOX (CMPL)	EA.	2
23.1020	REM & SALVAGE BEND	EA.	1
23.1030	REM & RESET HYDRANT (CMPL)	EA.	1
23.1050	REM & RESET ANCHORING COUPLING	EA.	1
23.1070	REM & RESET GATE VALVE & BOX (CMPL)	EA.	1
23.1170	ABANDONMENT OF WATER MAIN (IN PLACE)	L.S.	1
50.0001	10"x11.25° BEND, M.J.	EA.	4
50.0001	10"x6" TEE, M.J.	EA.	1
50.0001	10"x6" TAPPING SLEEVE AND VALVE, M.J.	EA.	1
50.0001	10" SOLID SLEEVE, M.J.	EA.	1
50.0001	10" RETAINER GLAND, M.J. (L=12")	EA.	10
50.0001	10" GATE VALVE, M.J.	EA.	1
50.0005	10" D.I. WATER MAIN PIPE, CLASS 52	L.F.	239

WASTE WATER ITEMS

20.0389	BORING FOR 10" SANITARY SEWER PIPE	L.F.	12
22.0070	10" SANITARY SEWER PIPE	L.F.	97
22.0700	STD MH, TY "S"	EA.	2
22.0710	STD MH, TY "S"	V.F.	21
50.0005	10" SANITARY SEWER PIPE (C900 PVC)	L.F.	80
50.0005	REMOVE 10" SANITARY SEWER PIPE	L.F.	80
50.0015	ABANDON SANITARY SEWER PIPE	L.S.	1

BRIDGE ITEMS

SEE BRIDGE SUMMARY OF QUANTITIES SHEETS 119 AND 181

RI 12 JUN 07

PROFESSIONAL CIVIL ENGINEER
TODD A. COCHRAN
E-10610
STATE OF NEBRASKA

6-12-07

USER: MEGAN STARNER
DATE: 6/13/2007
DGN: 701014D705.dgn

47-BD4000 CONCRETE & EPOXY COATED STEEL FOR CONCRETE RAIL ON ROADWAY (IN PLACE) 50.0010 – 50.0025					
STATION RANGE	SIDE	RAIL	STEEL Lb	CY	DETAIL SHT
9+95.00 – 11+56.44	LT.	34"	3242	16.5	SHT 16
10+05.00 – 11+56.44	LT.	42"	8350	20.3	SHT 15
9+63.66 – 11+56.44	RT.	42"	10433	25.8	SHT 15
31+44.44 – 32+37.91	LT.	34"	1816	9.4	SHT 16
31+44.44 – 32+27.91	LT.	42"	4970	11.1	SHT 15
31+44.44 – 32+39.03	RT.	42"	5504	12.7	SHT 15

INTEGRAL COPING (SUBSIDIARY) R1			
STATION RANGE	SIDE	LF	DETAIL SHT
9+95.00 – 10+34.54	LT.	40	SHT 13 & 14
10+38.03 – 11+56.44	LT.	119	SHT 13 & 14
31+44.44 – 32+64.03	RT.	120	SHT 12 & 14
31+44.44 – 31+82.24	LT.	37	SHT 12 & 14
31+85.73 – 32+37.91	LT.	42	SHT 12 & 14

COPING 50.0005			
STATION RANGE	SIDE	LF	DETAIL SHT
9+38.66 – 12+12.44	RT.	274	SHT ~~12~~ & 14 13
~~9+05.00 – 10+34.54~~	~~LT.~~	~~40~~	~~SHT 12 & 14~~
~~10+38.03~~ – 12+13.24 11+56.44	LT.	~~274~~ 57	SHT ~~12~~ & 14 13
12+12.44 – 12+13.24	RT./LT.	77	SHT ~~12~~ & 14 13
12+12.44 – 12+12.44	LT.	8	SHT ~~12~~ & 14 13
30+94.94 – ~~32+64.03~~ 31+44.44	RT.	~~169~~ 50	SHT ~~13~~ & 14 12
30+94.94 – ~~31+82.24~~ 31+44.44	LT.	~~87~~ 50	SHT ~~13~~ & 14 12
~~31+85.73 – 32+27.91~~	~~LT.~~	~~42~~	~~SHT 13 & 14~~

R1

CONCRETE LEVELING PAD 50.0005			
STATION RANGE	SIDE	LF	DETAIL SHT
9+38.66 – 12+12.44	RT.	274	SHT ~~12~~ 13
9+95.00 – 10+31.78	LT.	37	SHT ~~12~~ 13
10+40.28 – 12+13.24	LT.	~~272~~ 173	SHT ~~12~~ 13
12+12.44 – 12+13.24	RT./LT.	77	SHT ~~12~~ 13
12+12.44 – 12+12.44	LT.	8	SHT ~~12~~ 13
30+94.94 – 32+64.03	RT.	169	SHT ~~13~~ 12
30+94.94 – 31+80.00	LT.	85	SHT ~~13~~ 12
31+88.50 – 32+~~27.91~~ 37.91	LT.	~~39~~ 49	SHT ~~13~~ 12

R1

CONCRETE FACE PANELS 50.0045			
STATION RANGE	SIDE	SF	DETAIL SHT
9+95.00 – 12+12.44*	LT.	2925	SHT 12
12+12.44 * – 12+12.44	LT. – RT.	1350	SHT 12
9+38.66 – 12+12.44	RT.	4875	SHT 12
12+12.44 – 12+12.44	RT.	46	SHT 12
30+94.94 – 32+37.91	LT.	1105	SHT 13
30+94.94 – 32+64.03	RT.	1354	SHT 13

* BASED ON O STREET STATIONING

PEDESTRIAN RAILING ON ROADWAY (SPECIAL TYPE B) 50.0005			
STATION RANGE	SIDE	LF	DETAIL SHT
9+98.00 – 10+34.54	LT.	36	SHT 16
10+38.03 – 10+75.72	LT.	37	SHT 16
10+78.05 – 11+51.36	LT.	73	SHT 16
11+53.69 – 11+57.19	LT.	3	SHT 16
31+46.77 – 31+82.24	LT.	35	SHT 16
31+85.73 – 32+22.25	LT.	36	SHT 16
32+24.58 – 32+37.91	LT.	13	SHT 16

PEDESTRIAN BARRIER RAIL ON ROADWAY 50.0005			
STATION RANGE	SIDE	LF	DETAIL SHT
10+00.50 – 11+56.69	LT.	156	SHT 18
31+44.94 – 32+32.41	LT.	88	SHT 18

0 20 40

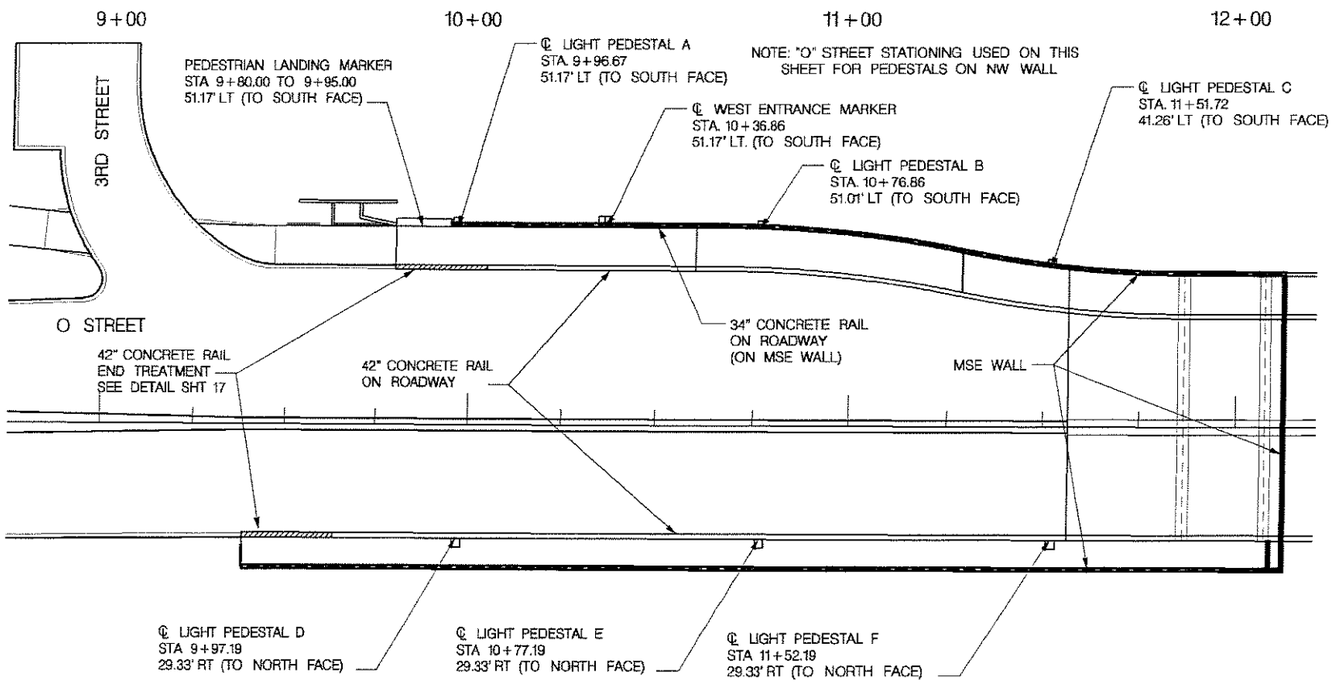

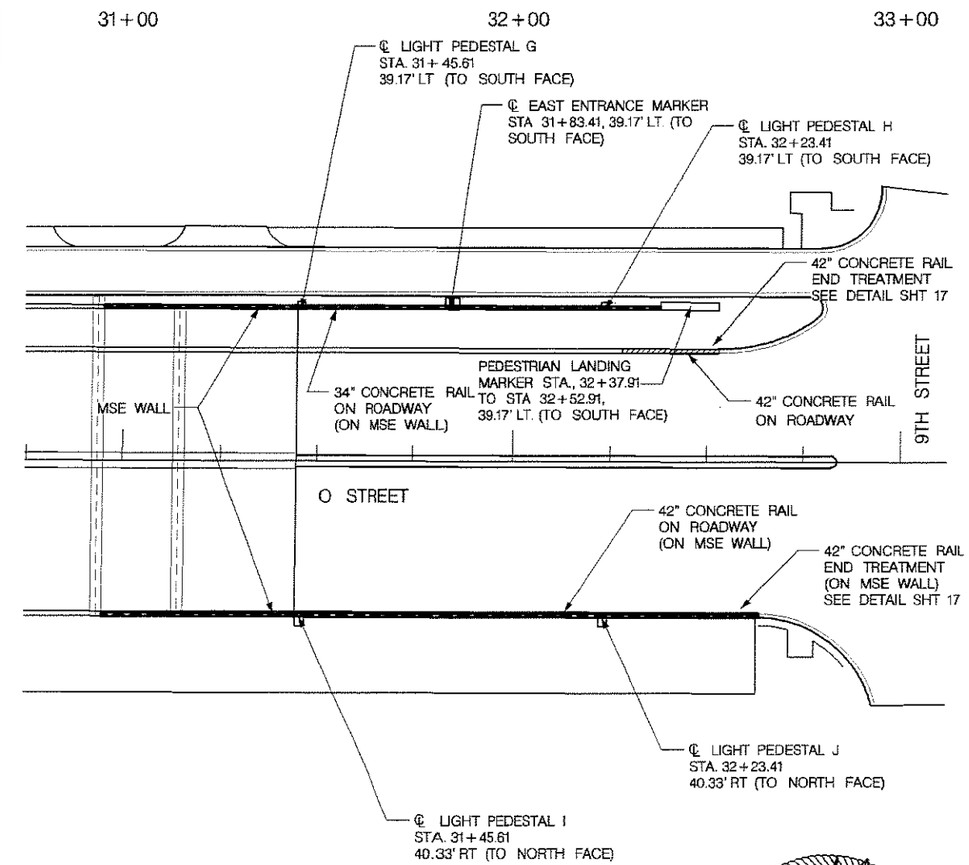

47-BD4000 CONCRETE & EPOXY COATED STEEL FOR MARKERS AND LIGHT PEDESTALS (IN PLACE) 50.0010 – 50.0025			
STRUCTURE	STEEL Lb	CY	DETAIL SHT
LIGHT PEDESTALS A – C	1278	4	SHT 19
LIGHT PEDESTALS D – F	1561	4	SHT 19
LIGHT PEDESTALS G & H	1196	7	SHT 19
LIGHT PEDESTALS I & J	1429	7	SHT 19
W. ENTRANCE MARKER	1175	13	SHT 20
E. ENTRANCE MARKER	1256	14	SHT 20
W. PED LANDING MARKER	1032	18	SHT 20
E. PED LANDING MARKER	1004	15	SHT 20

FOUNDATION FOR CONCRETE LIGHT PEDESTAL 50.0001	
STRUCTURE	EA
LIGHT PEDESTAL G	1
LIGHT PEDESTAL H	1
LIGHT PEDESTAL I	1
LIGHT PEDESTAL J	1

R1 12 JUN 07

PROFESSIONAL CIVIL ENGINEER
TODD A. COCHRAN
E-10610
STATE OF NEBRASKA

6-12-07

MARKER, CONC. RAIL, AND LIGHT PEDESTAL LOCATIONS DETAILS

117-C-72

USER: MEGAN STARNER
DATE: 6/12/2007
DGN: 701781ET07.dgn

THE SCHEMMER ASSOCIATES

PROJECT NO.	SHEET NO.
701781	12
Date: 6/12/2007	Drawn: MDS
Horz. Scale No Scale	Checked: TAC
	Approved: TAC

TSA PROJECT NO. 04552.001 NDOR PROJECT NO. BR-5266(1); CN 12572

117-C-72

PROFILE OF NE MSE WALL (BACKSIDE OF WALL)

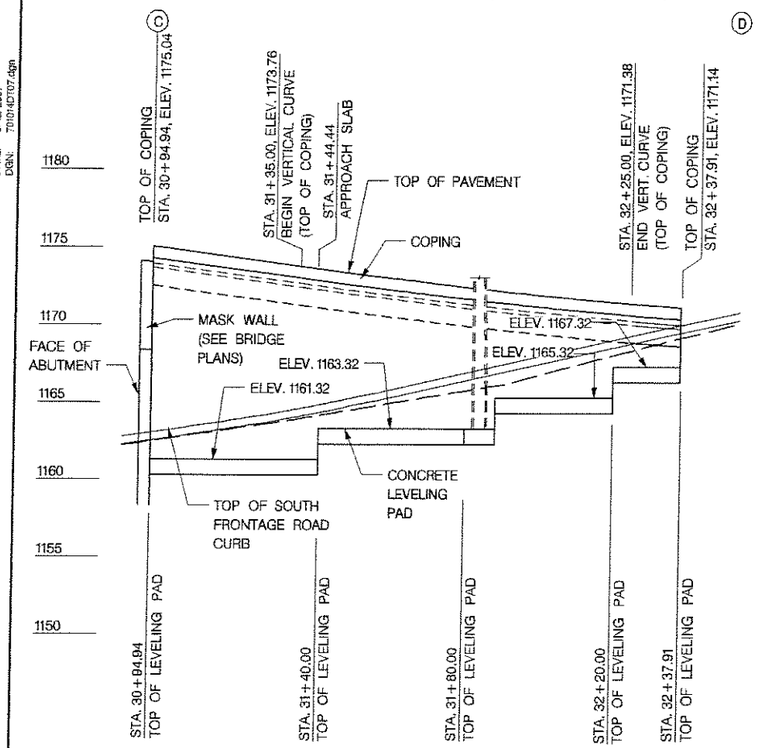

PROFILE OF SE MSE WALL (FACE OF WALL)

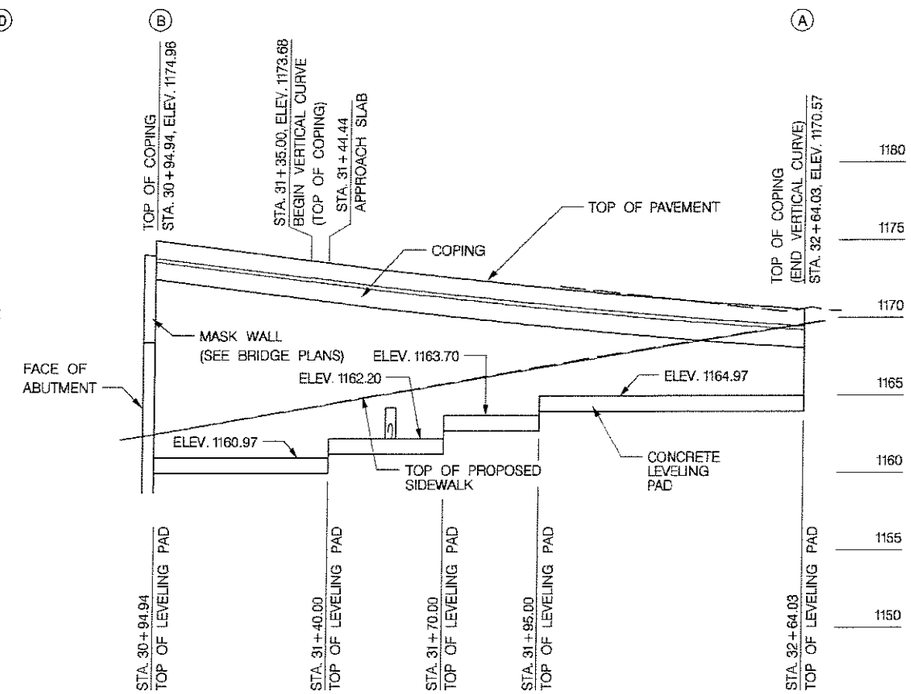

NOTE:

SEE SHEET 7 FOR COPING DETAIL

COLOR FACING PANELS AND COPING COLOR 1 - SEE SPECIAL PROVISIONS SECTION "MECHANICALLY STABILIZED EARTH WALLS WITH CONCRETE FACING PANELS."

PROPOSED ASHLAR STONE
MSE WALL PANEL TEXTURE PATTERN

NOT TO SCALE

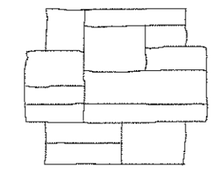

TYPICAL SECTION OF WALL PARALLEL TO ROADWAY

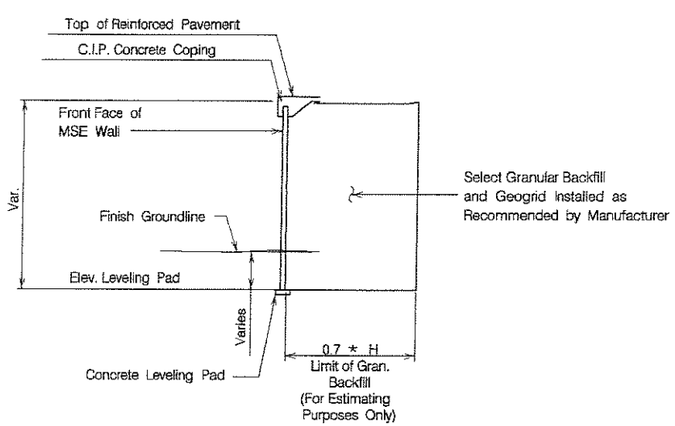

R1

MSE WALL
STAKING GEOMETRICS
(FACE OF ~~COPING~~)
MSE WALL

(A) STA. 32+64.03, 40.00 RT
(B) STA. 30+94.94, 40.00 RT
(C) STA. 30+94.94, 39.84 LT
(D) STA. 32+37.91, 39.84 LT

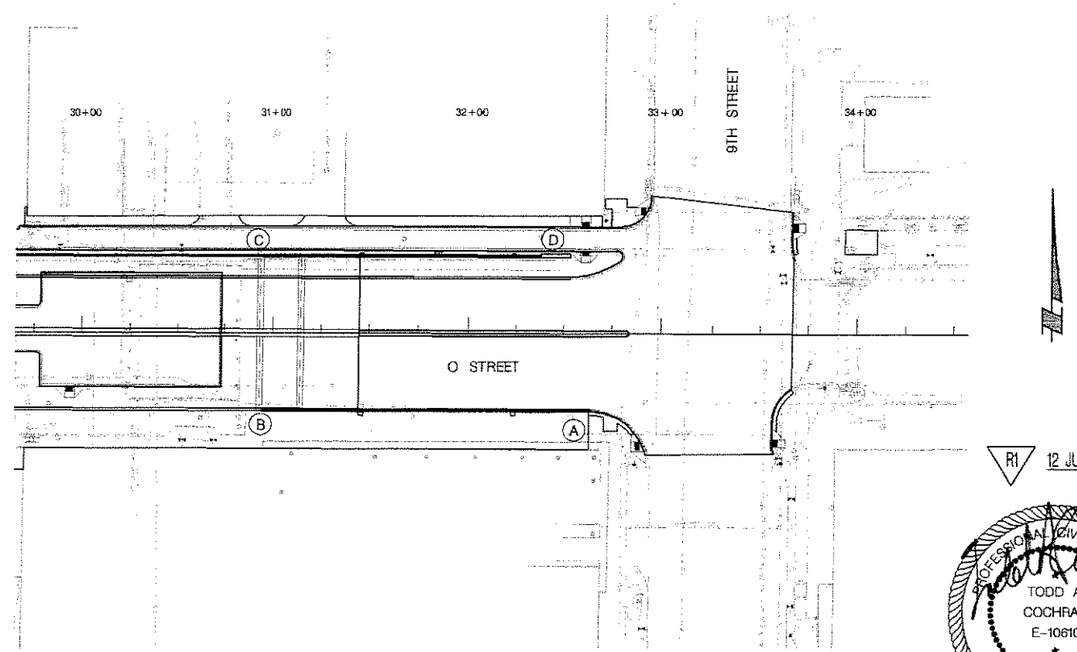

MSE WALL PLAN LAYOUT

R1 12 JUN 07

PROFESSIONAL CIVIL ENGINEER
TODD A. COCHRAN
E-10610
STATE OF NEBRASKA
6-12-07

EAST MSE WALL DETAILS

117-C-72

USER: MEGAN STARNER
DATE: 6/13/2007
DGN: 701014CT08.dgn

THE SCHEMMER ASSOCIATES

PROJECT NO.	SHEET NO.
701781	14
Date: 6/15/2007	Drawn: MDS
No Scale	Checked: TAC
	Approved: TAC

TSA PROJECT NO. 04852.001 NDOR PROJECT NO. BR-5269(1); CN 12572

117-C-72

NOTE:
LONGITUDINAL REINFORCING IN CONCRETE RAILS NOT SHOWN FOR CLARITY.

4 LONGITUDINAL BAR SPLICES SHALL BE A MINIMUM OF 2 FEET.

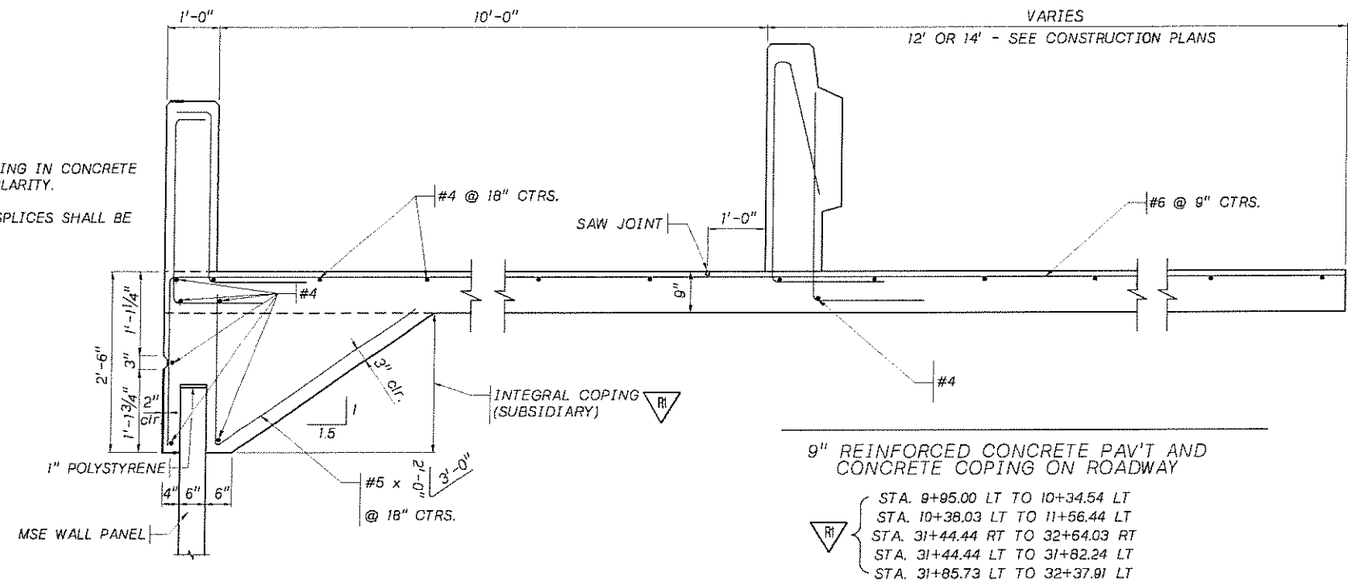

9" REINFORCED CONCRETE PAV'T AND CONCRETE COPING ON ROADWAY

R1
STA. 9+95.00 LT TO 10+34.54 LT
STA. 10+38.03 LT TO 11+56.44 LT
STA. 31+44.44 RT TO 32+64.03 RT
STA. 31+44.44 LT TO 31+82.24 LT
STA. 31+85.73 LT TO 32+37.91 LT

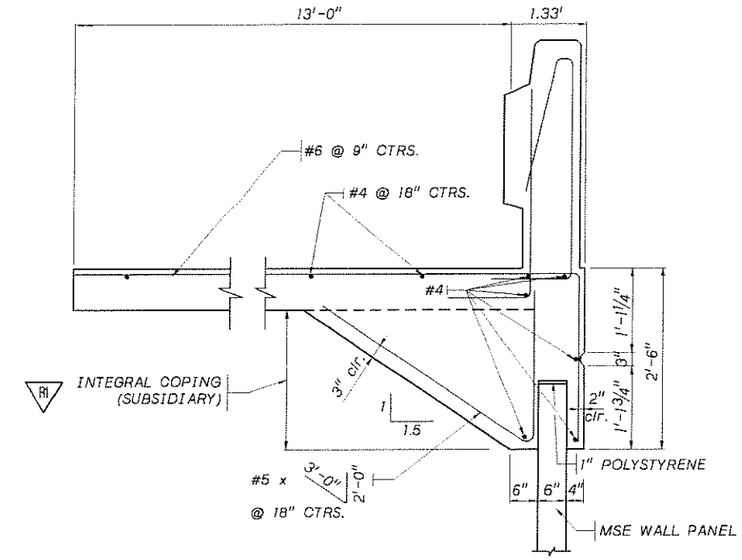

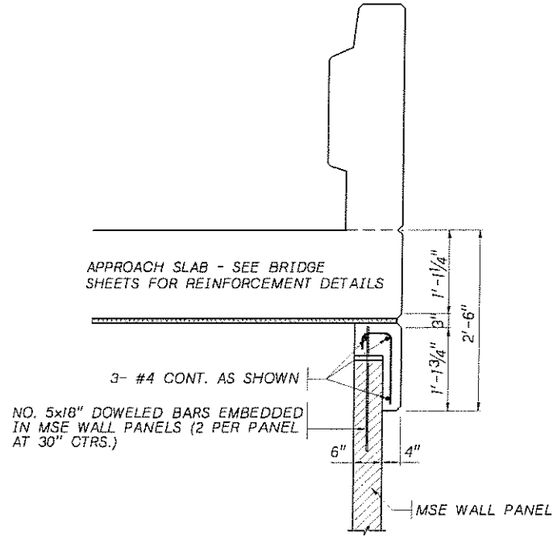

CONCRETE COPING ON APPROACH SLAB

R1
STA. 11+56.44 LT TO 12+12.44 LT
STA. 11+56.44 RT TO 12+12.44 RT
STA. 30+94.44 LT TO 31+44.44 LT.
STA. 30+94.44 RT TO 31+44.44 RT.

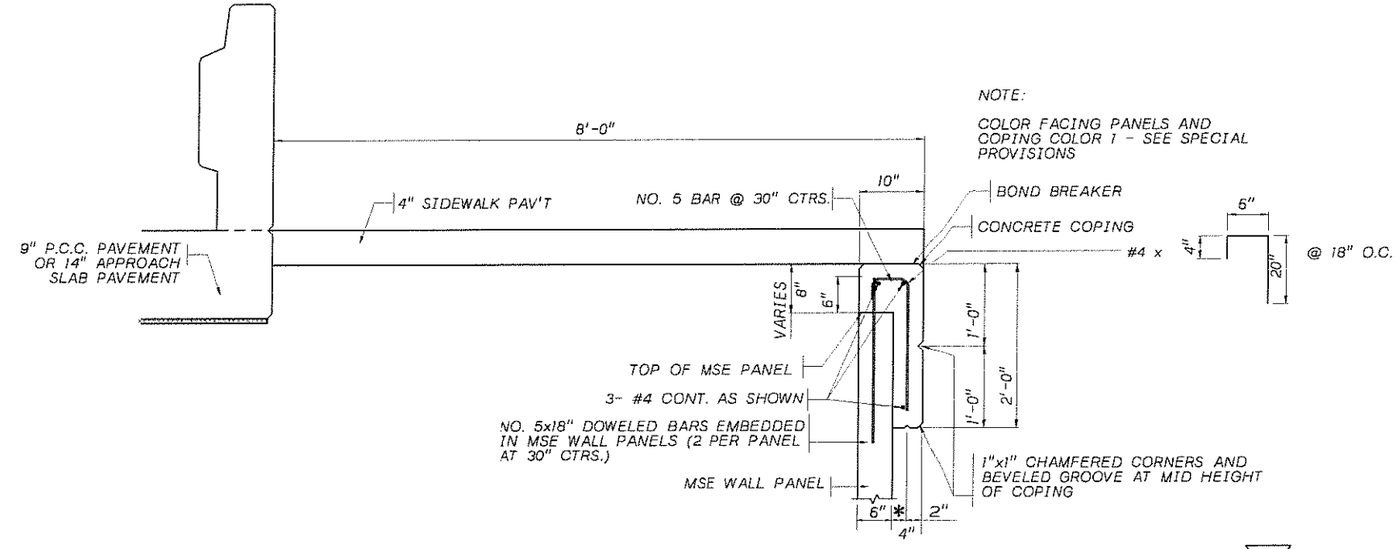

NOTE:
COLOR FACING PANELS AND COPING COLOR 1 - SEE SPECIAL PROVISIONS

R1 12 JUN 07

* ½ DRIP BEAD

CONCRETE COPING ADJACENT TO 4" SIDEWALK (SOUTHWEST RETAINING WALL)

R1
STA. 9+38.66, 37.00 RT TO 11+56.44, 37.00 RT
STA. 12+12.44, 37.00 RT TO 12+12.44, 29.33 RT
STA. 12+12.44, 37.00 RT TO 12+13.24, 39.84 LT

PROFESSIONAL STRUCTURAL ENGINEER
STEPHEN D. KATNOL
E-9095
STATE OF NEBRASKA

6/14/07

CONCRETE COPING REINFORCEMENT DETAIL 117-C-72

117-C-72

USER: MEGAN STARNER
DATE: 6/12/2007
DGN: 701314PD03.dgn

THE SCHEMMER ASSOCIATES

PROJECT NO.	SHEET NO.
701781	59
Date: 6/12/2007	Drawn: MDS
Horz. Scale 1: 40	Checked: TAC
	Approved: TAC

TSA PROJECT NO. 04552.001 NDOR PROJECT NO. BR-5266(1); CN 12572

117-C-72

26+00 27+00 28+00 29+00 30+00 31+00

TAP EX. STORM SEWER MH. & REPLACE INVERT				21.1050
NO.	STATION	OFFSET	TAP FL	PROP FL
60	25+54.11	46.28' RT.	EX. 24" 1145.46 EX. 30" 1145.46	18" 1145.71

BUILD CURB INLET					21.0770 – 21.0790
NO.	STATION	OFFSET	TYPE	RIM EL	FL
60	25+80.49	9.44' RT	STRAIGHT	1152.50	15" 1148.90
61	25+84.04	19.67' RT.	STRAIGHT	1152.85	12" 1149.05 15" 1148.80 18" 1148.55
70	28+97.82	60.45' LT.	STRAIGHT	1157.60	15" 1154.27
80	29+72.97	55.77' LT.	STRAIGHT	1158.86	18" 1154.35

R.C.P. STORM SEWER					21.0010 – 21.0370
NO.	SIZE	LF	CLASS	DESCRIPTION	
60	15"x18"	39	III	INLET 61 TO TAP 60	
62	15"	7	III	INLET 61 TO INLET 60	
70	15"x12"	89	III	MH 7 TO MH 8	

R1 R1

REM. STORM SEWER PIPE				21.1210 – 21.1325
STATION TO STATION		OFFSET	SIZE	LF
25+55.54 – 25+80.20		47'–55' RT.	18"	26
25+84.79 – 25+93.90		56'–29' RT.	12"	25
25+79.46 – 25+92.66		37'–30' LT.	12"	15
28+20.96 – 28+26.56		47' LT–26' RT.	12"	75
28+95.82 – 28+99.52		65'–60' LT.	12"	6
29+55.03 – 29+71.72		34'–50' RT.	12"	23
29+72.42 – 29+72.51		28'–49' RT.	12"	21
29+56.97 – 29+71.04		38'–50' LT.	12"	18
29+72.42– 29+72.49		49'–35' LT.	18"	14
29+73.64– 30+75.23		51'–30' LT.	12"	113

R1 12 JUN 07

REM. INLET (CMPL.)		21.1710
STATION	OFFSET	EA
25+83.21	55.48' RT.	1
28+94.21	66.69' LT.	1
29+73.45	55.12' LT.	1

0 20 40

PIPE CURVE DATA

A
P.I. STA. 25+73.03, 39.49 RT
Δ=37° 2' 40"
R=60.00
T=20.10
L=38.79
P.C. STA. 25+54.11, 46.28 RT
P.T. STA. 25+84.04, 22.67 RT

B
P.I. STA. 30+88.17, 46.94 RT
Δ=39° 49' 44"
R=60.00
T=21.74
L=41.71
P.C. STA. 30+71.42, 33.09 RT
P.T. STA. 31+09.91, 46.84 RT

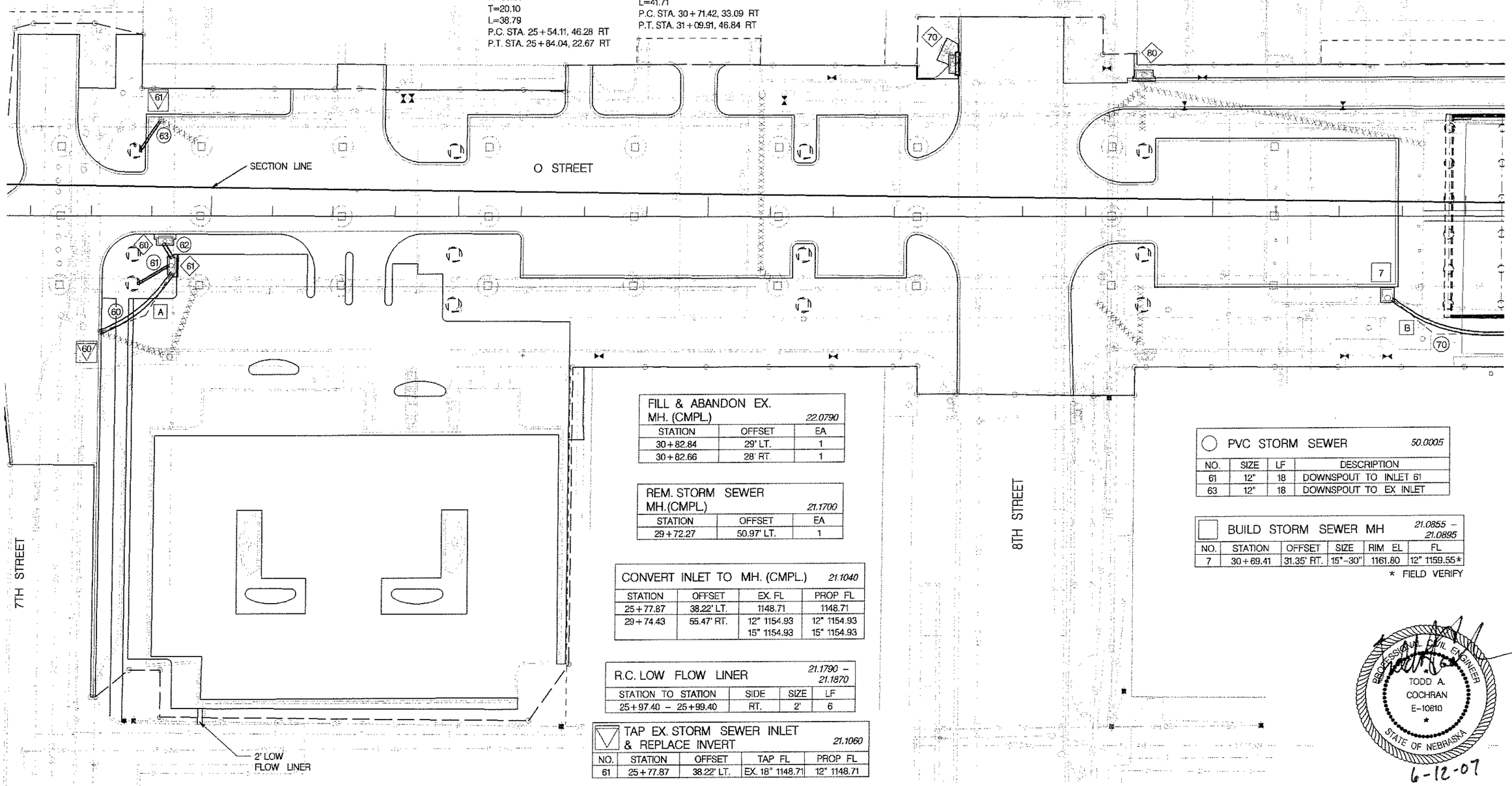

FILL & ABANDON EX. MH. (CMPL.)		22.0790
STATION	OFFSET	EA
30+82.84	29' LT.	1
30+82.66	28' RT.	1

REM. STORM SEWER MH.(CMPL.)		21.1700
STATION	OFFSET	EA
29+72.27	50.97' LT.	1

CONVERT INLET TO MH. (CMPL.)			21.1040
STATION	OFFSET	EX. FL	PROP FL
25+77.87	38.22' LT.	1148.71	1148.71
29+74.43	55.47' RT.	12" 1154.93 15" 1154.93	12" 1154.93 15" 1154.93

R.C. LOW FLOW LINER			21.1790 – 21.1870
STATION TO STATION	SIDE	SIZE	LF
25+97.40 – 25+99.40	RT.	2'	6

TAP EX. STORM SEWER INLET & REPLACE INVERT				21.1060
NO.	STATION	OFFSET	TAP FL	PROP FL
61	25+77.87	38.22' LT.	EX. 18" 1148.71	12" 1148.71

PVC STORM SEWER			50.0905
NO.	SIZE	LF	DESCRIPTION
61	12"	18	DOWNSPOUT TO INLET 61
63	12"	18	DOWNSPOUT TO EX INLET

BUILD STORM SEWER MH					21.0855 – 21.0895
NO.	STATION	OFFSET	SIZE	RIM EL	FL
7	30+69.41	31.35' RT.	15"–30"	1161.80	12" 1159.55*

* FIELD VERIFY

PROFESSIONAL CIVIL ENGINEER
TODD A. COCHRAN
E-10610
STATE OF NEBRASKA
6-12-07

STORM DRAINAGE 117-C-72

117-C-72

THE SCHEMMER ASSOCIATES

PROJECT NO.	SHEET NO.
701781	73

Date: 6/15/2007 Horz. Scale 1 : 40
Drawn: MDS Checked: TAC Approved: TAC

TSA PROJECT NO. 04652.001 NDOR PROJECT NO. BR-5286(1); CN 12572

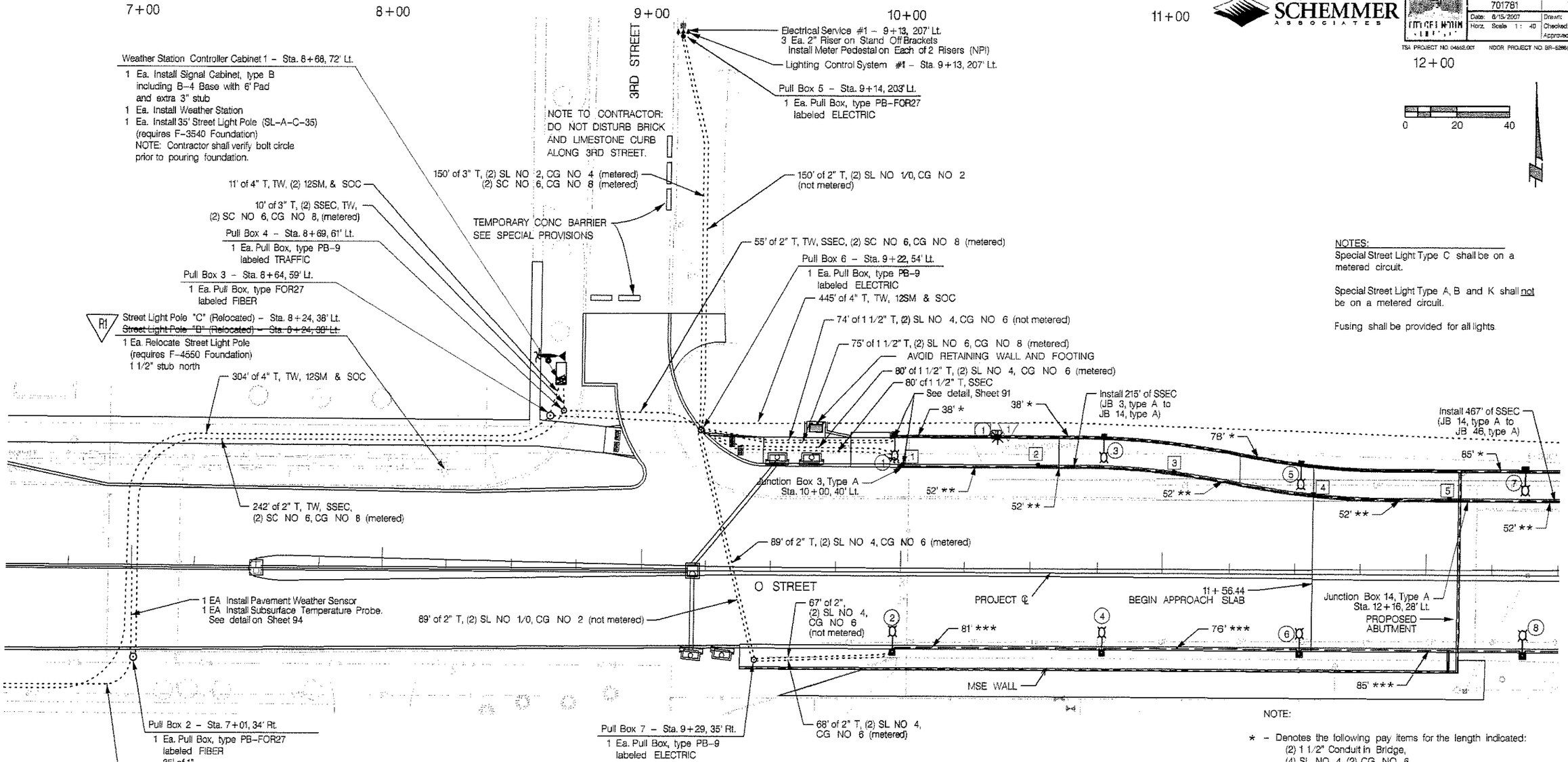

NOTES:
Special Street Light Type C shall be on a metered circuit.

Special Street Light Type A, B and K shall not be on a metered circuit.

Fusing shall be provided for all lights.

NOTE:

* – Denotes the following pay items for the length indicated:
(2) 1 1/2" Conduit in Bridge,
(4) SL NO 4, (2) CG NO 6,
See "Pedestrian Barrier Rail Conduit Detail" on sheet 91.

** – Denotes the following pay items for the length indicated:
(2) 1 1/2" Conduit in Bridge,
(2) SL NO 4, CG NO 6,
See "North Vehicle Barrier Rail Detail" on sheet 91.

*** – Denotes the following pay items for the length indicated:
(2) 1 1/2" Conduit in Bridge,
(4) SL NO 4, (2) CG NO 6,
See "South Vehicle Barrier Rail Conduit Detail" on sheet 91.

Lighting Schedule:
Special Street Light Type A Includes:
Post: Z PT 14 F418 CA DG
Arm: C30 CA DG (Half arm)
Luminaire: GVU 175 MH 24 N 3 N S N
Manufacturer: Holophane

Special Street Light Type B Includes:
AAL: SL CS14W 70MH (Luminaire, excluding arm)

Special Street Light Type C Includes:
Luminaire: LTD 24 4WH SPEC-LT3WRS
Manufacturer: Holophane

Special Street Light Type K Includes:
Luminaire: LT 24 9WH 06D RD VC-LT6912GRS
Manufacturer: Holophane

BUILD SPECIAL STREET LIGHT, TYPE A (ROADWAY LIGHTING)

NO.	STATION	OFFSET	LAMP
1	9+97	53' LT.	175W, MH
2	9+96	30' RT.	175W, MH
3	10+77	53' LT.	175W, MH
4	10+77	30' RT.	175W, MH
5	11+52	43' LT.	175W, MH
6	11+52	30' RT.	175W, MH
7	12+37	41' LT.	175W, MH
8	12+37	30' RT.	175W, MH

BUILD SPECIAL STREET LIGHT, TYPE C (PEDESTRIAN LIGHTING)

NO.	STATION	OFFSET	LAMP
1	10+01	41' LT.	4 x 1.2W, LED
2	10+53	41' LT	4 x 1.2W, LED
3	11+05	39' LT	4 x 1.2W, LED
4	11+57	31' LT	4 x 1.2W, LED
5	12+09	29' LT	4 x 1.2W, LED

JUNCTION BOX, TYPE A

NO.	STATION	OFFSET	DESCRIPTION
1	9+97	53' LT.	BASE OF SPECIAL SL A, NO 1
2	9+97	30' RT.	BASE OF SPECIAL SL A, NO 2
3	10+00	40' LT.	IN VEHICLE BARRIER
4	10+01	41' LT.	BELOW SPECIAL SL C, NO 1
5	10+37	52' Lt.	BASE OF SPECIAL SL B, NO 1
6	10+53	41' LT	BELOW SPECIAL SL C, NO 2
7	10+77	53' LT.	BASE OF SPECIAL SL A, NO 3
8	10+77	30' RT.	BASE OF SPECIAL SL A, NO 4
9	11+05	39' LT	BELOW SPECIAL SL C, NO 3
10	11+52	43' LT.	BASE OF SPECIAL SL A, NO 5
11	11+52	30' RT.	BASE OF SPECIAL SL A, NO 6
12	11+57	31' LT	BELOW SPECIAL SL C, NO 4
13	12+09	29' LT	BELOW SPECIAL SL C, NO 5
14	12+16	28' LT.	IN VEHICLE BARRIER
15	12+37	41' LT.	BASE OF SPECIAL SL A, NO 7
16	12+37	30' RT.	BASE OF SPECIAL SL A, NO 8

BUILD SPECIAL STREET LIGHT, TYPE B (ROADWAY LIGHTING)

NO.	STATION	OFFSET	LAMP
1	10+37	52' Lt.	70W, MH

BUILD SPECIAL STREET LIGHT, TYPE K (ROADWAY LIGHTING)

NO.	STATION	OFFSET	LAMP
1	10+37	52' Lt.	9 x 1.2W, LED

Refer to 2006 City of Lincoln Standard Specifications, Section 24.20 for riser construction.

R1 6-15-07 REVISIONS

PROFESSIONAL CIVIL ENGINEER
JEFFERY J. HAASE
E-10652
STATE OF NEBRASKA

June 15, 2007

USER: JEFF HAASE
DATE: 6/15/2007
DGN: 701761TS2-sl.dgn

THE SCHEMMER ASSOCIATES

PROJECT NO.	SHEET NO.
701761	81
Date: 6-15-2007	Drawn: MDS
Horz. Scale 1 : 40	Checked: TAC
	Approved: TAC

TSA PROJECT NO. 04662.001 NDOR PROJECT NO. BR-5(69)(1); CN 12b/2

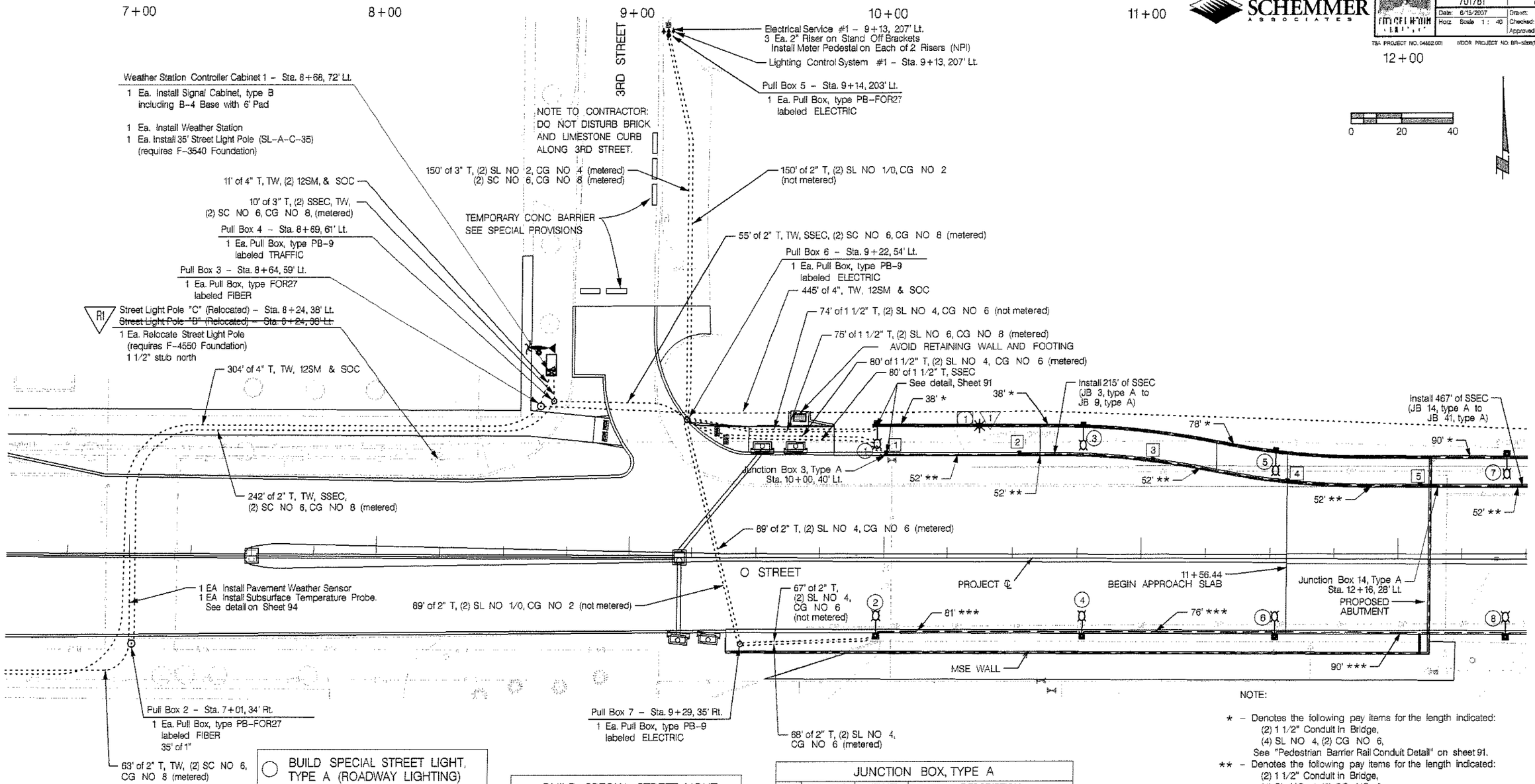

NOTE:

* – Denotes the following pay items for the length indicated:
(2) 1 1/2" Conduit in Bridge,
(4) SL NO 4, (2) CG NO 6,
See "Pedestrian Barrier Rail Conduit Detail" on sheet 91.

** – Denotes the following pay items for the length indicated:
(2) 1 1/2" Conduit in Bridge,
(4) SL NO 4, (2) CG NO 6,
See "North Vehicle Barrier Rail Detail" on sheet 91.

*** – Denotes the following pay items for the length indicated:
(2) 1 1/2" Conduit in Bridge,
(4) SL NO 4, (2) CG NO 6,
See "South Vehicle Barrier Rail Conduit Detail" on sheet 91.

Refer to 2006 City of Lincoln Standard Specifications, Section 24.20 for riser construction.

R1 6-15-07 REVISIONS

PROFESSIONAL ENGINEER
JEFFERY J. HAASE
E-10652
STATE OF NEBRASKA

June 15, 2007

Lighting Schedule:
Special Street Light Type A Includes:
Post: Z PT 14 F418 CA DG
Arm: C30 CA DG (Half arm)
Luminaire: GVU 175 MH 24 N 3 N S N
Manufacturer: Holophane

Special Street Light Type B Includes:
AAL: SL CS14W 70MH (Luminaire, excluding arm)

Special Street Light Type C Includes:
Luminaire: SQS C 100 MH 240 EB FR BK TP
Manufacturer: Cooper Lighting (Invue)

NOTES:
Special Street Light Type C shall be on a metered circuit.

Special Street Light Type A, B and K shall not be on a metered circuit.

Fusing shall be provided for all lights.

BUILD SPECIAL STREET LIGHT, TYPE A (ROADWAY LIGHTING)

NO.	STATION	OFFSET	LAMP
1	9+97	53' LT.	175W, MH
2	9+97	30' RT.	175W, MH
3	10+77	53' LT.	175W, MH
4	10+77	30' RT.	175W, MH
5	11+52	43' LT.	175W, MH
6	11+52	30' RT.	175W, MH
7	12+42	41' LT.	175W, MH
8	12+42	30' RT.	175W, MH

BUILD SPECIAL STREET LIGHT, TYPE B (ROADWAY LIGHTING)

NO.	STATION	OFFSET	LAMP
1	10+37	52' Lt.	70W, MH

BUILD SPECIAL STREET LIGHT, TYPE C (PEDESTRIAN LIGHTING)

NO.	STATION	OFFSET	LAMP
1	10+01	41' LT.	4 x 1.2W, LED
2	10+53	41' LT	4 x 1.2W, LED
3	11+05	39' LT	4 x 1.2W, LED
4	11+57	31' LT	4 x 1.2W, LED
5	12+09	29' LT	4 x 1.2W, LED

BUILD SPECIAL STREET LIGHT, TYPE K (ROADWAY LIGHTING)

NO.	STATION	OFFSET	LAMP
1	10+37	52' Lt.	9 x 1.2W, LED

JUNCTION BOX, TYPE A

NO.	STATION	OFFSET	DESCRIPTION
1	9+97	53' LT.	BASE OF SPECIAL SL A, NO 1
2	9+97	30' RT.	BASE OF SPECIAL SL A, NO 2
3	10+00	40' LT.	IN VEHICLE BARRIER
4	10+01	41' LT.	BELOW SPECIAL SL C, NO 1
5	10+37	52' Lt.	BASE OF SPECIAL SL B, NO 1
6	10+53	41' LT	BELOW SPECIAL SL C, NO 2
7	10+77	53' LT.	BASE OF SPECIAL SL A, NO 3
8	10+77	30' RT.	BASE OF SPECIAL SL A, NO 4
9	11+05	39' LT	BELOW SPECIAL SL C, NO 3
10	11+52	43' LT.	BASE OF SPECIAL SL A, NO 5
11	11+52	30' RT.	BASE OF SPECIAL SL A, NO 6
12	11+57	31' LT	BELOW SPECIAL SL C, NO 4
13	12+09	29' LT	BELOW SPECIAL SL C, NO 5
14	12+16	28' LT.	IN VEHICLE BARRIER
15	12+42	41' LT.	BASE OF SPECIAL SL A, NO 7
16	12+42	30' RT.	BASE OF SPECIAL SL A, NO 8

TRAFFIC SIGNAL AND LIGHTING - STEEL 117-C-72

117-C-72