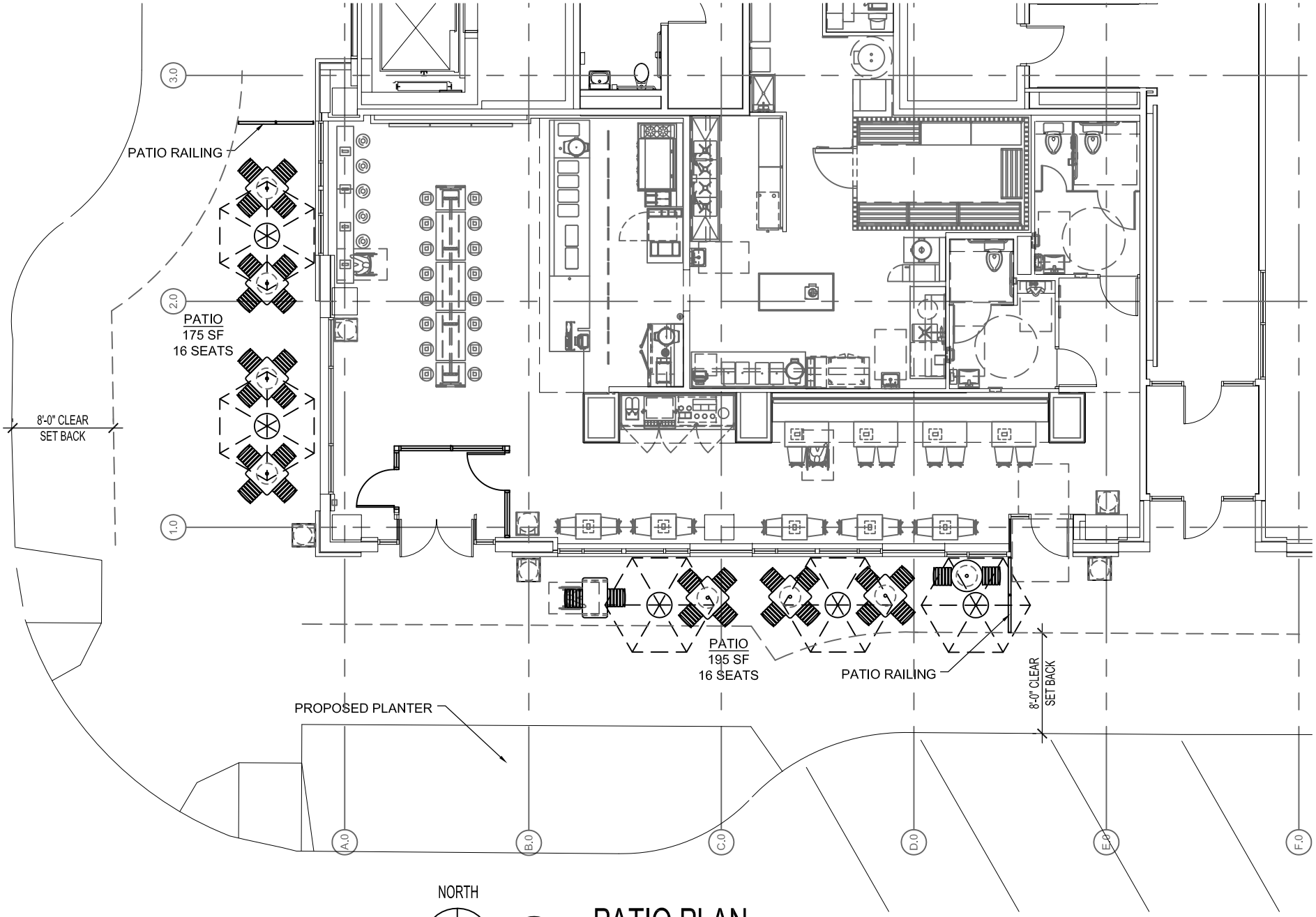

NORTH

1

PATIO PLAN

0 4' 8' 12' 16'

FHA ARCHITECTS

CHIPOTLE MEXICAN GRILL

SIDEWALK CAFE

UNL LINCOLN - BLOCK 38

MAY 24, 2012

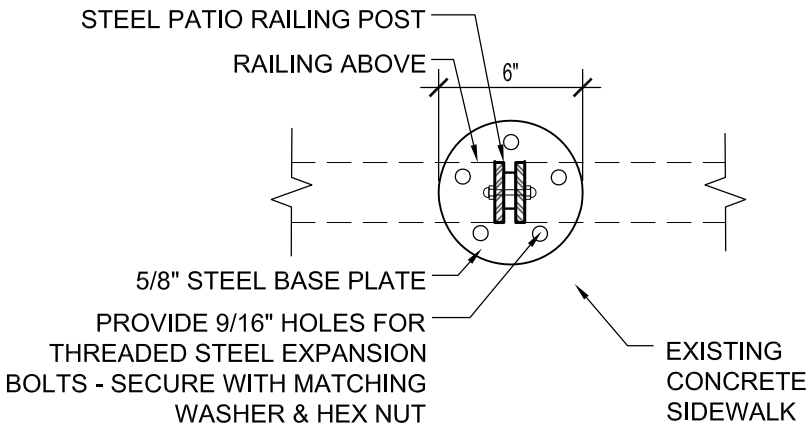

RAILING MOUNTING DETAIL

2/2

SCALE: 1 1/2" = 1'-0"

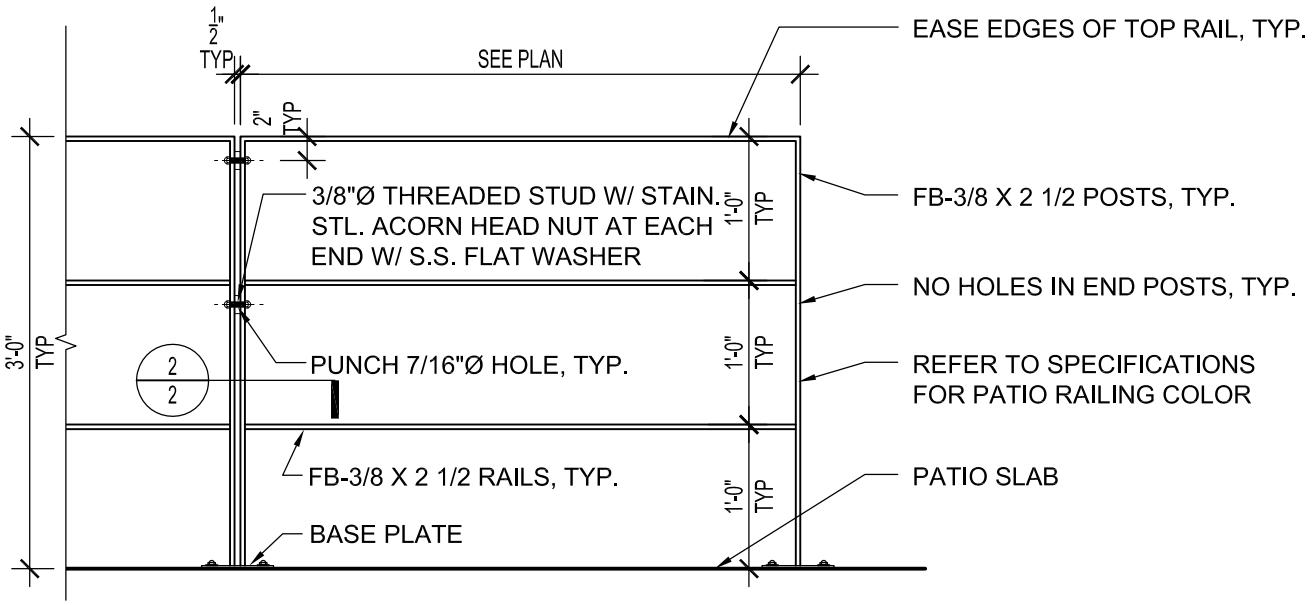

RAILING ELEVATION

1/2

SCALE: 3/4" = 1'-0"

FHA ARCHITECTS

CHIPOTLE MEXICAN GRILL

SIDEWALK CAFE

MAY 24, 2012

UNL LINCOLN - BLOCK 38

CHIPOTLE

MEXICAN GRILL

TYPICAL PATIO VIEW

CHAIR

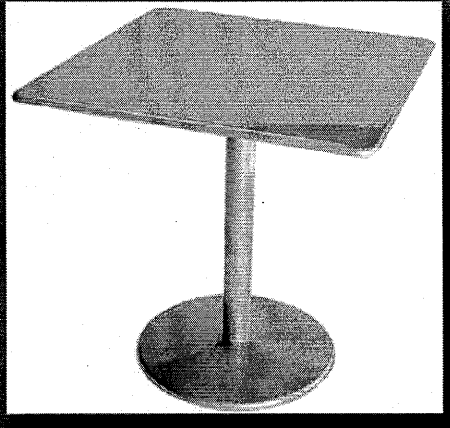

SQUARE TABLE

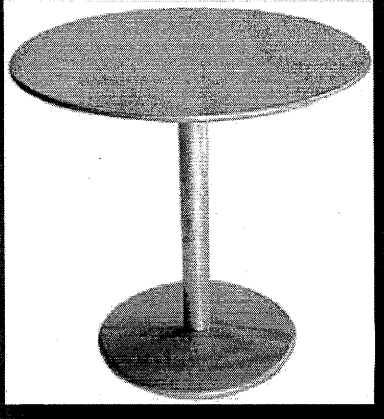

ROUND TABLE

UNL Lincoln - Block 38

Store No #1651

13th & Q Street

Lincoln, NE 68508