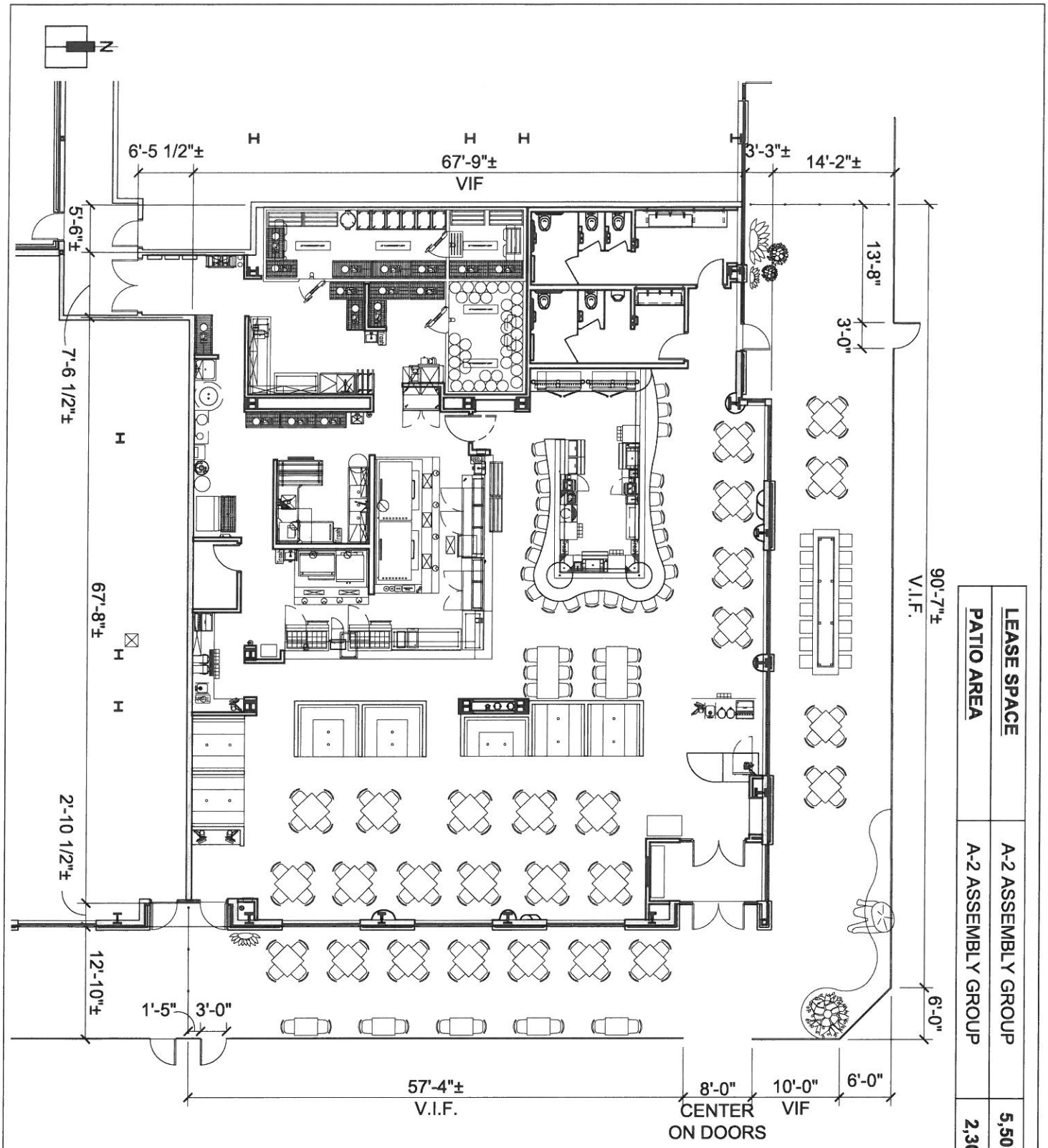

LEASE SPACE	5,503 S.F.
PATIO AREA	A-2 ASSEMBLY GROUP
A-2 ASSEMBLY GROUP	2,307 S.F.

2 FLOOR PLAN

SCALE: 1/16" = 1'-0"

PROJECT NUMBER: 12056

FILE LOCATION: DRAWINGS\CURRENT\XR_LAYOUT

DATE: 04/17/2013

ALLEY•POYNER
MACCHIETTO
ARCHITECTURE
1516 Cuming Street
Omaha, NE 68102
Ph: 402.341.1544
Fx: 402.341.4735
alleypoyner.com

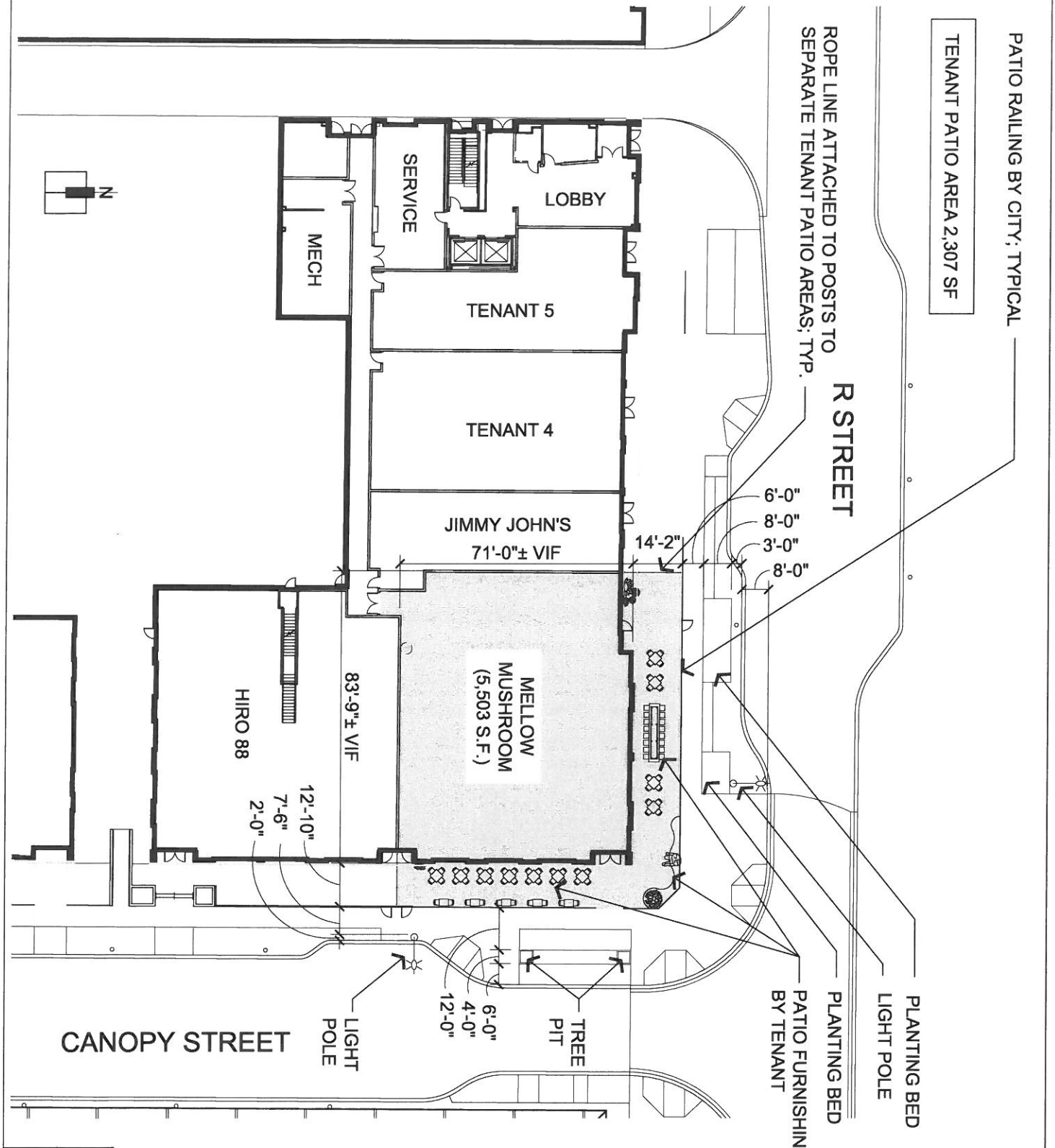

1 SITE PLAN

SCALE: 1" = 40'-0"

PROJECT NUMBER: 12056

FILE LOCATION: DRAWINGS\CURRENT\A0.1

DATE: 04/17/2013

ALLEY • POYNER MACCHIETTO
ARCHITECTURE
1516 Cuming Street
Omaha, NE 68102
Ph: 402.341.1544
Fx: 402.341.4735
alleypoyner.com

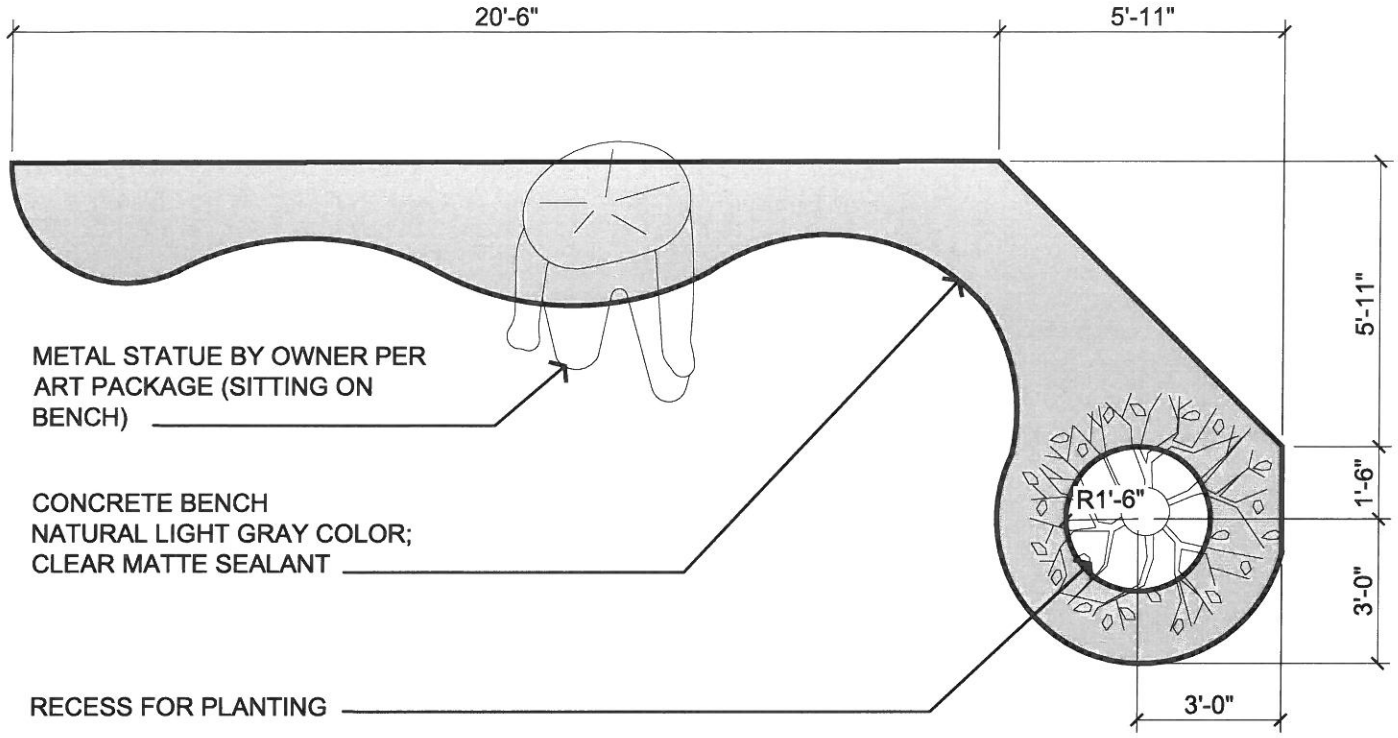

VISUAL REFERENCE OF WHAT THE BENCH SHOULD LOOK LIKE. ARCHITECT WILL WORK WITH CUSTOM CONCRETE VENDOR / GC TO DETERMINE APPROPRIATE CONSTRUCTION METHOD.

A1 CONCRETE BENCH

SCALE: 1/4" = 1'-0"

PROJECT NUMBER: 12118

FILE LOCATION: DRAWINGS\CURRENT\A1.3

DATE: 04/17/2013

DWG. NO.

SD03
A1

ALLEY•POYNER MACCHIETTO
ARCHITECTURE
1516 Cuming Street
Omaha, NE 68102
Ph: 402.341.1544
Fx: 402.341.4735
alleypoyner.com

NOTE:
GALVANIZE ENTIRE
ASSEMBLY

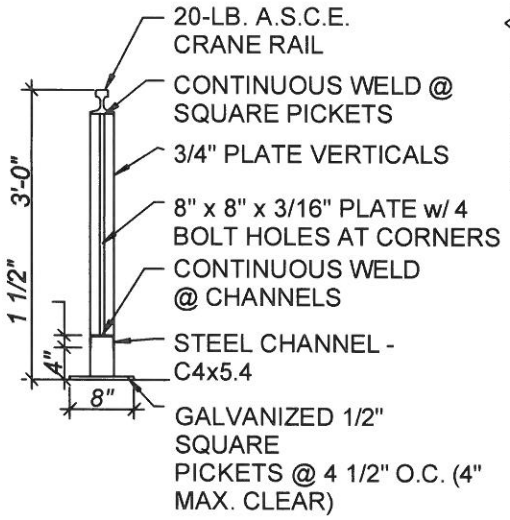

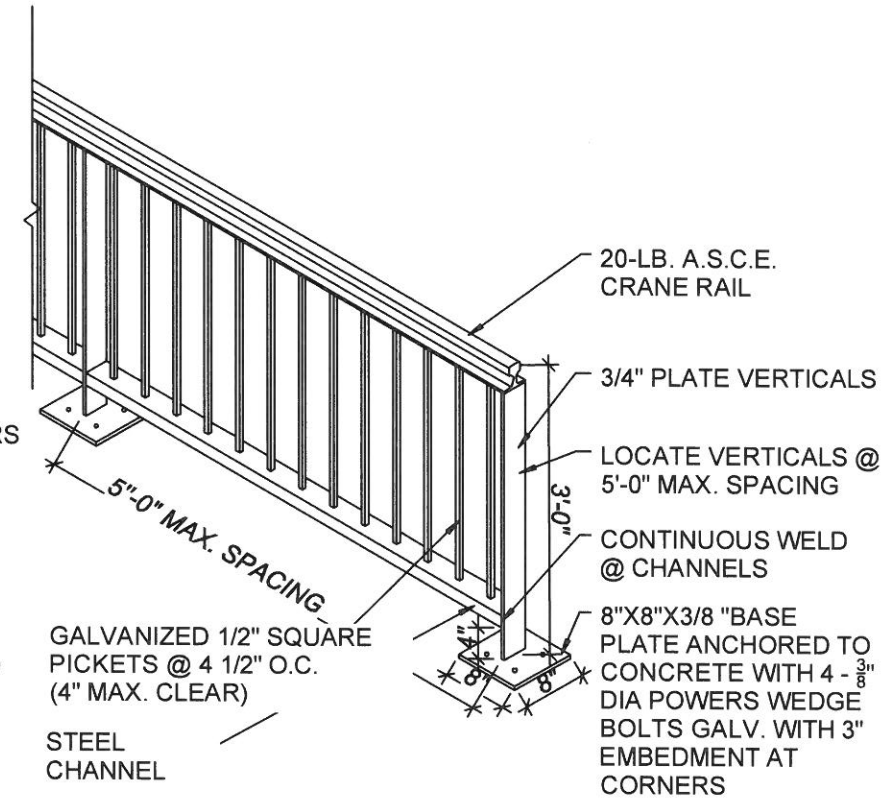

17 DECORATIVE FENCE : BID ALT. L-1

SCALE: ½" = 1'-0"

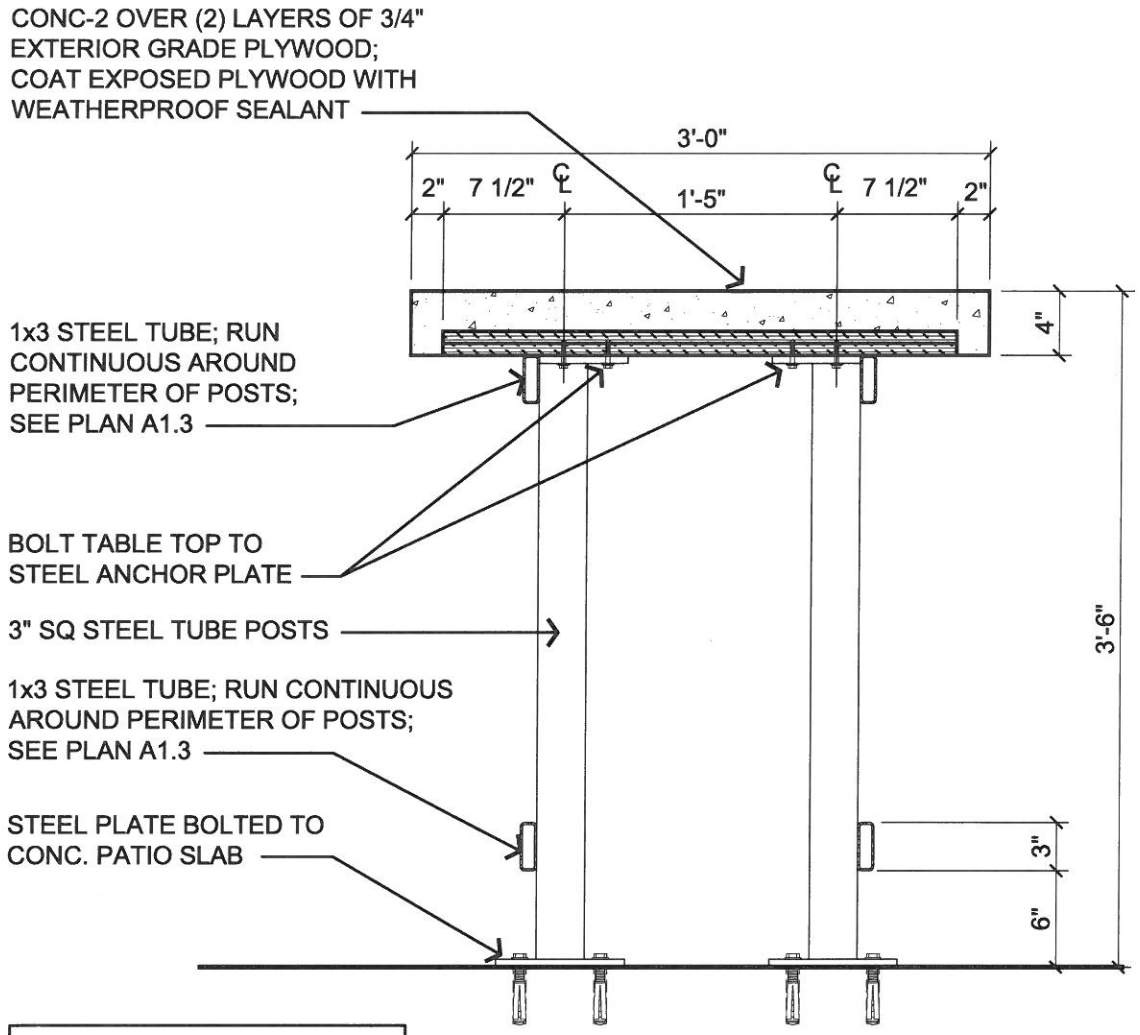

NOTE ALL STEEL MEMBERS AND ATTACHMENTS TO BE PAINTED BENJAMIN MOORE (#1589-KITTY GRAY)

M14	DETAIL - PATIO TABLE
A5.6	SCALE: 1" = 1'-0"

LONG CUSTOM TABLE SHOWN ON PLANS IN NORTH PATIO AREA

CUSTOM CONCRETE TABLE
(BASE CONFIGURATION WILL VARY FROM IMAGE AND BE PAINTED DARK GREY)

BAR STOOLS
(AT CUSTOM CONCRETE TABLE)

STACKABLE OUTDOOR DINING CHAIR

OUTDOOR DINING TABLES
(4-TOP AND 2-TOP)

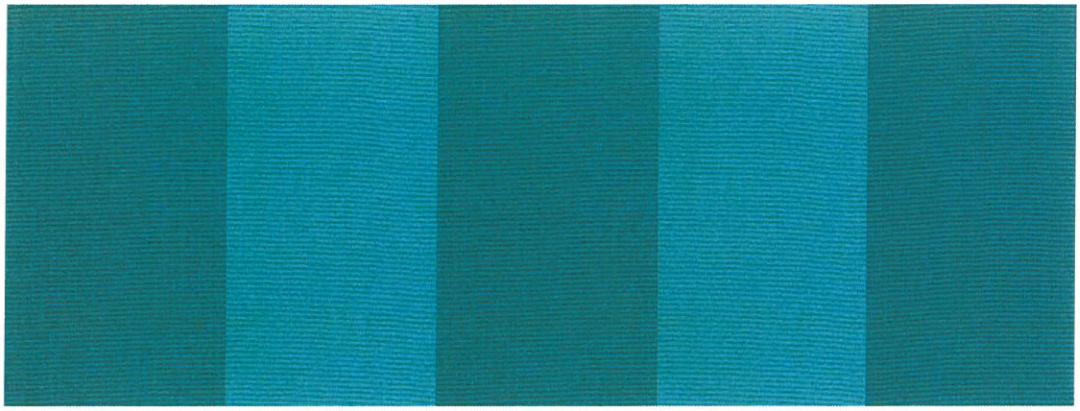

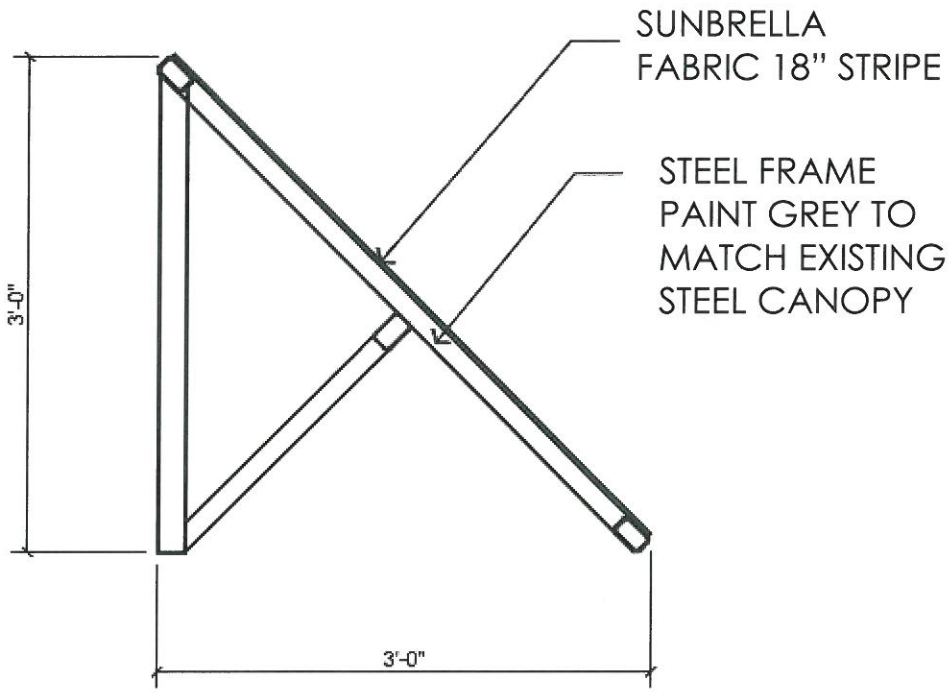
SUNBRELLA
FABRIC 18" STRIPE
STEEL FRAME
PAINT GREY TO
MATCH EXISTING
STEEL CANOPY
3'-0"
3'-0"

AWNINGS

SUNFLOWER SCULPTURES

(3 TOTAL-FREE STANDING)

LARGE AND SMALL ONE ON NORTHWEST END OF PATIO AND MEDIUM ONE ON SOUTHEAST END OF PATIO. WILL VISUALLY ANCHOR TENANT'S PATIO AREA

GEAR PLANTER POTS

(AT NORTH SIDE NEXT TO SUNFLOWERS. WILL BE PAINTED DARK GREY TO MATCH CONCRETE TABLE BASE AND POTTED WITH PLAN/FLOWERS)

MELLOW MUSHROOM

'DUDE' STATUE
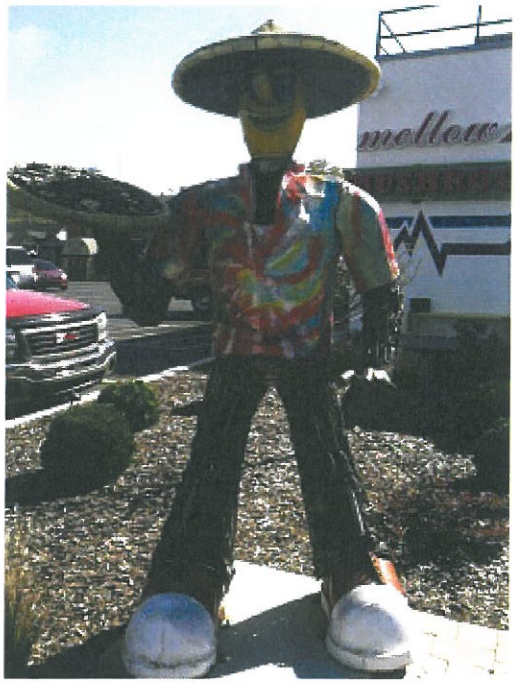
METAL STATUE MORPHED TO WEAR OVERALLS AND SIT ON THE CONCRETE BENCH ON THE NORTH SIDE OF THE PATIO. STATUE CONSTRUCTED LARGELY OF RECLAIMED METAL PARTS FITS RAILROAD THEME OF COMPLEX AND CONTEXT FOR REMAINDER OF PATIO ELEMENTS