PROJ: 7000228 OLD AS OF 070810.cfg
PEN: ...\tables\Pen\GW_PENTABLE.TBL
USER: sleccaw
DATE: 9/27/2011
DGN: ...\STANDARD\Current\lsp162.dgn

CITY OF LINCOLN NEBRASKA	PROJECT NO.	SHEET NO.
	LSP 162	1
	Date: 02/24/2010	Drawn: CAW
		Checked:
		Approved:

LSP 162

STORM SEWER MANHOLE

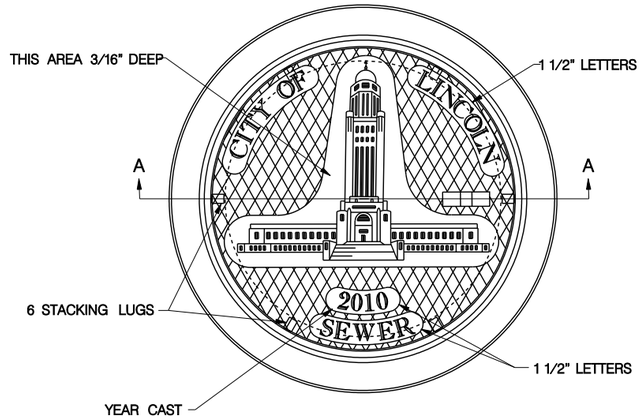

SANITARY SEWER MANHOLE

WATER MANHOLE

STANDARD HEAVY TRAFFIC TYPE MANHOLE COVER AND FRAME

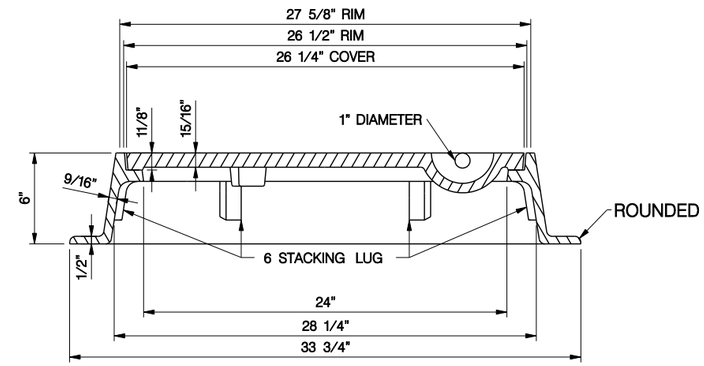

TYPICAL SECTION A-A

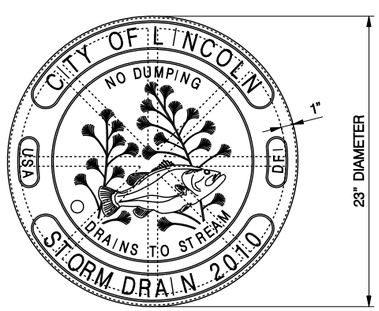

INLET COVER

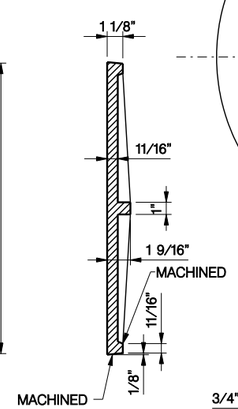

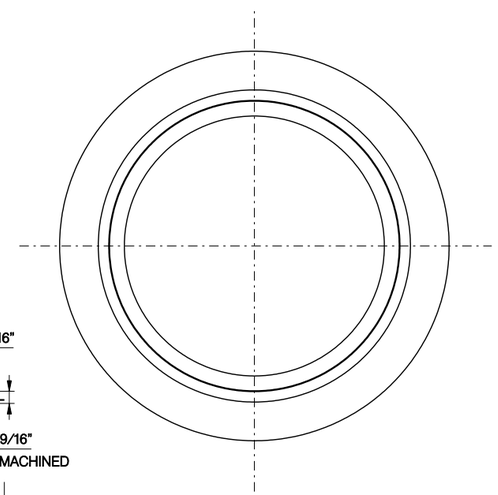

INLET COVER FRAME

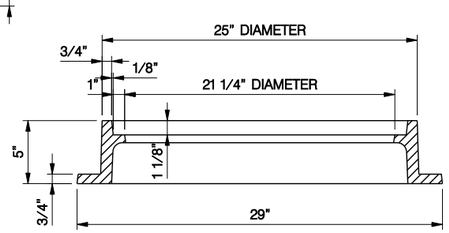

TYPICAL SECTION

STANDARD
CAST IRON INLET COVER AND FRAME

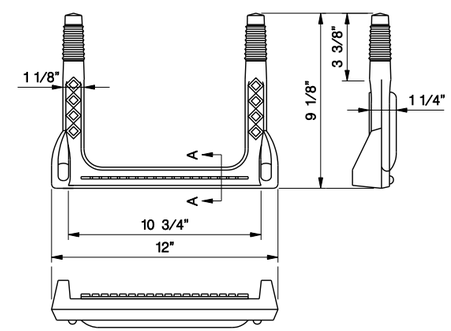

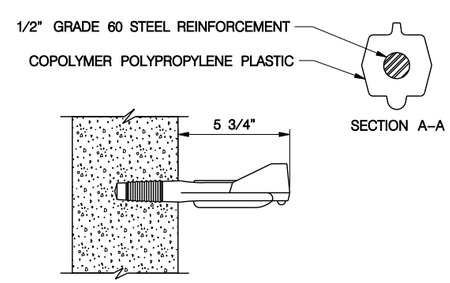

1. STEP SHALL MEET THE REQUIREMENTS OF ASTM C-478, AASHTO M-199 AND OSHA INSTRUCTION STD 1-1.9

2. POLYPROPYLENE PLASTIC SHALL CONFORM TO ASTM D-4101

REINFORCED PLASTIC STEPS

GENERAL NOTES:

1. CASTING SHALL CONFORM TO THE REQUIREMENTS OF 'SPECIFICATIONS FOR GRAY IRON CASTING' IN ACCORDANCE WITH A.S.T.M. DESIGNATION A-48-83, CLASS 35B

2. CASTINGS ARE TO BE MANUFACTURED TRUE TO PATTERN WITH SATISFACTORY FIT OF COMPONENT PARTS. CASTINGS SHALL BE FREE OF DEFECTS. DIMENSIONS AS DETAILED ON PLAN SHALL NOT DEVIATE BY +/- 1/16" PER FOOT.

3. CASTING SHALL BE FURNISHED WITH MACHINED HORIZONTAL BEARING SURFACES.

4. CASTING SHALL BE RATED 'HEAVY DUTY' SUITABLE FOR H-20 TRAFFIC LOADING.

CAST IRON MANHOLE RING, COVER AND STEPS
L.S.P. 162

LSP 162

This document was originally issued and sealed by Thomas S. Shafer, E-10679, on 3-1-10. This media should not be considered a certified document.