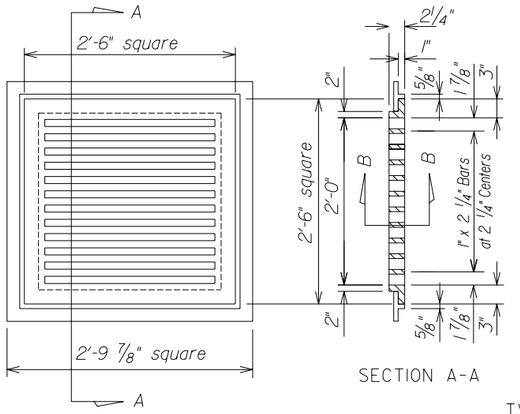


SECTION A-A

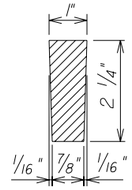


SECTION B-B

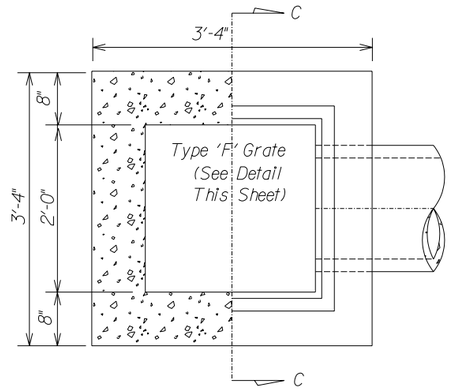


TYPE 'F' GRATE INLET

NOTE:
FOR DETAIL OF
COVER AND FRAME,
SEE L.S.P. 162

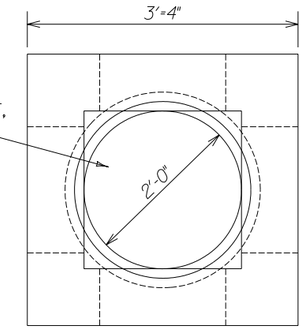


DETAIL OF

TYPE 'F-3' INLET TOP

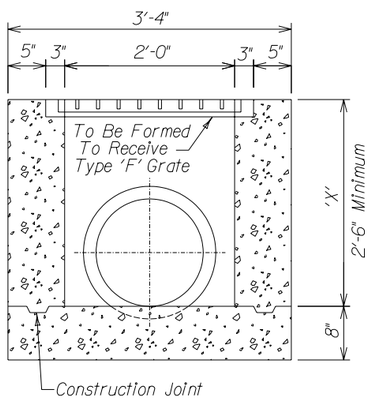


SECTION C-C

TYPE 'F-1A'

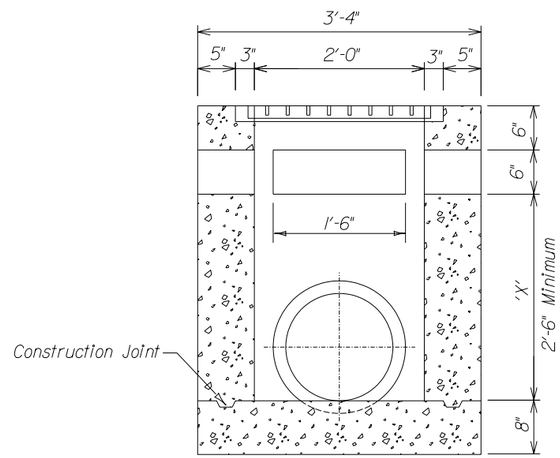


SECTION C-C

TYPE 'F-2A'

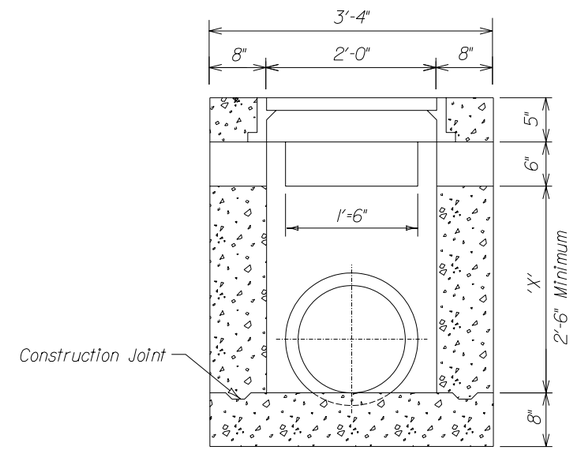


SECTION C-C

TYPE 'F-3A'

| APPROX. QUANTITIES FOR DRAINAGE INLETS | | | |
|---|---|---|---|
| 'X' DEPTH | TYPE 'F-1A' | TYPE 'F-2A' | TYPE 'F-3A' |
| FT. | CONC. CU. YDS. | CONC. CU. YDS. | CONC. CU. YDS. |
| 3.0 | 1.1 | 1.3 | 1.3 |
| 4.0 | 1.3 | 1.5 | 1.5 |
| 5.0 | 1.6 | 1.8 | 1.8 |
| 6.0 | 1.8 | 2.1 | 2.1 |
| 7.0 | 2.1 | 2.3 | 2.3 |
| 8.0 | 2.4 | 2.6 | 2.6 |
| 9.0 | 2.6 | 2.8 | 2.8 |
| ADD 0.1 | 0.03 | 0.026 | 0.026 |
| EACH INLET SHALL INCLUDE A CAST IRON GRATE AND FRAME. | | | |
| TABLE DOES NOT INCLUDE DEDUCTION FOR PIPE OPENING. | | | |

NOTE:

Provide openings in walls of Type F-2 and F-3 inlets as noted on the plans.

Details and quantities reflect openings in 3 walls as typical for Type 'F-2' and Type 'F-3' grate inlets.

All concrete shall be L3500.

All castings are to be coated with Bituminous Paint.

BRICK GRATE INLET SHALL NOT EXCEED 6 FT.

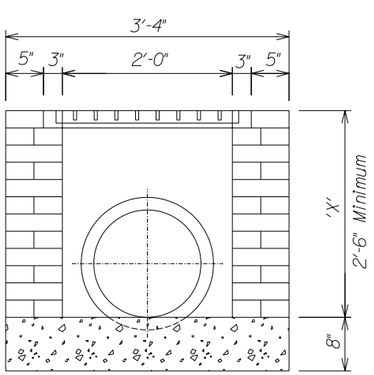


TYPE 'F-1B'

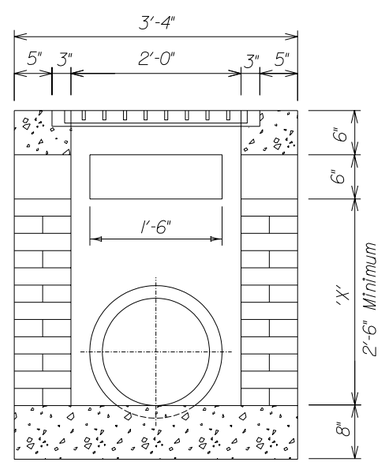


TYPE 'F-2B'

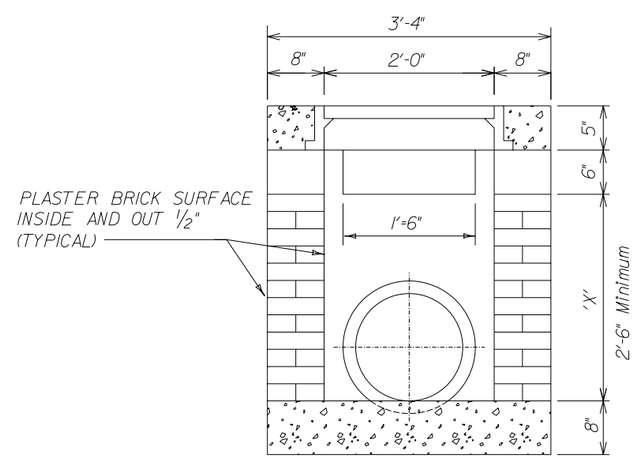


TYPE 'F-3B'

| REVISIONS | | |
|---|---|---|
| NO. | BY | DATE |
| 1 | | |
| 2 | | |
| 3 | | |
| 4 | | |
| 5 | | |
| 6 | | |
| 7 | | |
| 8 | | |
| 9 | | |
| 10 | | |

GRATE INLETS, TYPE 'F'

CITY OF LINCOLN, NEBRASKA
OFFICE OF THE CITY ENGINEER

Date: 5-03 / CAW Scale: None

| No. Sheets | | Sheet No. |
|---|---|---|
| 1 | PLAN NO. L.S.P. 131 | 1 |