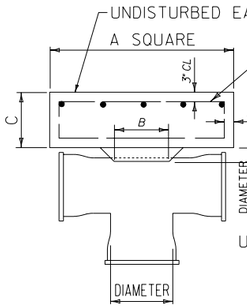

REINFORCED CONCRETE TEE BLOCK

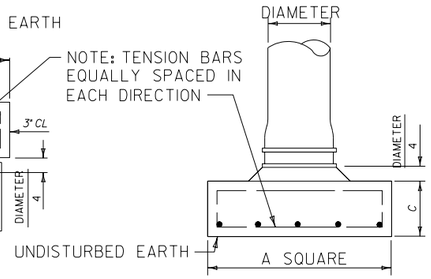

REINFORCED CONCRETE PLUG BLOCK

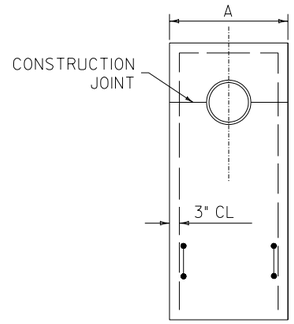

END ELEVATION

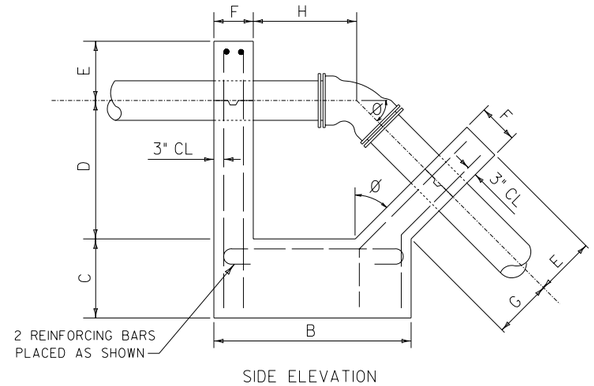

SIDE ELEVATION

REINFORED CONCRETE ANCHORAGE

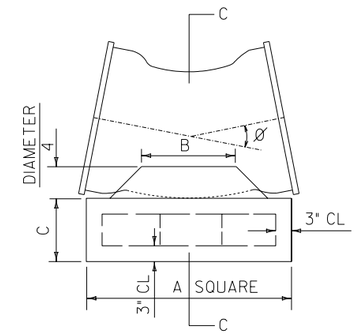

ELEVATION

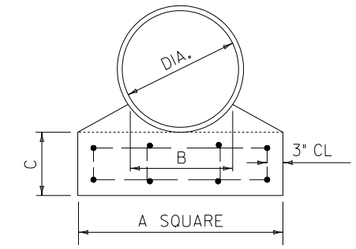

SECTION C-C

REINFORCED CONCRETE THRUST BLOCKS

REINFORCED CONCRETE TEE BLOCK AND PLUG BLOCK							
DIA.	A	B	C	REINF. BAR SIZE	No. OF BARS EACH WAY	STEEL (LBS.)	CONC. CU.YDS.
6	1'-9"	0'-8"	0'-8"	-	-	-	0.1
8	2'-3"	0'-9"	0'-9"	-	-	-	0.2
12	3'-4"	1'-0"	1'-0"	#4	6	22.7	0.4
16	4'-6"	1'-3"	1'-3"	#4	8	42.8	1.0
20	5'-8"	1'-6"	1'-6"	#5	8	86.8	1.9
24	6'-9"	1'-9"	1'-9"	#5	11	143.5	3.1
30	8'-6"	2'-6"	2'-0"	#5	16	267.0	5.5
36	10'-0"	3'-0"	2'-6"	#6	15	428.0	9.5
48	13'-6"	4'-0"	3'-0"	#7	20	1063.0	21.2

REINFORED CONCRETE ANCHORAGE																						
	Ø-45°											Ø-22 1/2°										
DIA.	A	B	C	D	E	F	G	H	CONC. CU.YDS.	REINF. BAR SIZE	STEEL (LBS.)	A	B	C	D	E	F	G	H	CONC. CU.YDS.	REINF. BAR SIZE	STEEL (LBS.)
6&8	2'-0"	4'-6"	1'-6"	2'-6"	1'-0"	1'-0"	0'-8"	1'-11"	0.94	#4	34	2'-0"	4'-6"	0'-9"	1'-6"	1'-0"	1'-0"	0'-8"	1'-7"	0.54	#4	28
10	2'-6"	5'-0"	1'-6"	3'-0"	1'-3"	1'-0"	1'-0"	2'-4"	1.31	#4	42	2'-6"	5'-0"	0'-9"	1'-9"	1'-3"	1'-0"	0'-9"	1'-8"	0.75	#4	32
12	3'-0"	5'-0"	2'-0"	3'-6"	1'-6"	1'-0"	1'-6"	3'-1"	1.98	#4	48	3'-0"	5'-0"	0'-9"	2'-0"	1'-6"	1'-0"	1'-0"	1'-9"	1.05	#4	36
14	3'-0"	6'-0"	2'-6"	4'-0"	1'-6"	1'-0"	1'-6"	3'-1"	2.58	#5	83	3'-0"	5'-6"	1'-3"	2'-3"	1'-6"	1'-0"	1'-3"	2'-3"	1.40	#4	36
16	3'-6"	6'-6"	2'-9"	4'-6"	1'-6"	1'-0"	1'-9"	3'-5"	3.46	#5	92	3'-0"	6'-6"	2'-0"	2'-9"	1'-6"	1'-0"	1'-6"	2'-9"	1.79	#4	47
18	3'-6"	7'-0"	3'-6"	4'-6"	1'-6"	1'-0"	1'-8"	3'-10"	4.29	#5	96	3'-6"	7'-0"	1'-9"	3'-0"	1'-6"	1'-0"	1'-8"	3'-1"	2.44	#4	50
20	4'-0"	7'-6"	3'-6"	5'-0"	1'-6"	1'-0"	2'-0"	4'-4"	5.25	#6	146	4'-0"	7'-0"	2'-0"	3'-0"	1'-6"	1'-0"	1'-8"	3'-1"	3.04	#5	80
24	5'-0"	10'-0"	3'-0"	7'-0"	2'-0"	1'-0"	2'-10"	6'-0"	7.96	#7	250	4'-6"	9'-0"	1'-9"	4'-0"	2'-0"	1'-0"	2'-3"	4'-2"	4.11	#6	143

REINFORCED CONCRETE THRUST BLOCK																			
	Ø-11 1/4"								Ø-22 1/2"										
DIA.	A	B	C	REINF. BAR SIZE	No. OF BARS EACH WAY	STEEL (LBS.)	CONC. CU.YDS.	DIA.	A	B	C	REINF. BAR SIZE	No. OF BARS EACH WAY	STEEL (LBS.)	CONC. CU.YDS.
6	1'-3"	0'-9"	1'-0"	-	-	-	0.1	6	1'-6"	0'-9"	1'-0"	-	-	-	0.1
8	1'-6"	1'-0"	1'-0"	-	-	-	0.1	8	1'-6"	1'-0"	1'-0"	-	-	-	0.1
12	1'-6"	1'-0"	1'-0"	#4	3	4.0	0.1	12	2'-3"	1'-0"	1'-0"	#4	3	7.0	0.2
16	2'-3"	1'-0"	1'-0"	#4	3	7.0	0.2	16	3'-0"	1'-0"	1'-0"	#4	5	16.7	0.4
20	2'-9"	1'-3"	1'-0"	#4	4	12.0	0.4	20	3'-9"	1'-3"	1'-0"	#4	7	30.4	0.6
24	3'-3"	1'-6"	1'-0"	#4	6	22.0	0.5	24	4'-6"	1'-6"	1'-3"	#5	6	50.1	1.1
30	4'-0"	2'-0"	1'-3"	#4	7	32.7	0.9	30	5'-6"	2'-0"	1'-6"	#5	9	93.9	1.9
36	4'-9"	2'-6"	1'-3"	#5	7	62.0	1.3	36	6'-9"	2'-6"	1'-9"	#5	12	169.5	3.3
48	6'-6"	3'-3"	1'-6"	#5	13	162.7	1.9	48	9'-0"	3'-3"	2'-0"	#10	6	438.9	6.7
	Ø-45°								Ø-90°						
DIA.	A	B	C	REINF. BAR SIZE	No. OF BARS EACH WAY	STEEL (LBS.)	CONC. CU.YDS.	DIA.	A	B	C	REINF. BAR SIZE	No. OF BARS EACH WAY	STEEL (LBS.)	CONC. CU.YDS.
6	1'-9"	1'-0"	1'-0"	-	-	-	.02	6	2'-3"	1'-0"	1'-0"	-	-	-	0.2
8	2'-3'	1'-0"	1'-0"	-	-	-	.02	8	3'-0"	1'-0"	1'-0"	-	-	-	0.4
12	3'-3"	1'-0"	1'-0"	#4	6	22.0	0.4	12	4'-3'	1'-0"	1'-3"	#5	6	47.0	0.9
16	4'-3"	1'-0"	1'-3"	#5	6	46.9	0.9	16	5'-9"	1'-0"	1'-6"	#5	10	109.5	2.0
20	5'-3"	1'-3"	1'-6'	#5	8	79.3	1.6	20	7'-0"	1'-3"	1'-9"	#5	15	203.4	3.3
24	6'-3"	1'-6"	1'-6'	#5	11	131.9	2.3	24	8'-6'	1'-6"	2'-0"	#6	15	360.5	5.6
30	7'-9"	2'-0"	1'-9'	#7	9	266.7	4.1	30	10'-6"	2'-0"	2'-3"	#9	10	680.0	9.5
36	9'-3"	2'-6"	2'-0"	#7	14	500.8	6.8	36	12'-6"	2'-6"	2'-9"	#10	11	1136.0	16.3
48	12'-3"	3'-3"	2'-6"	#10	11	1112.3	14.8	48	16'-9"	3'-3"	3'-6"	#11	16	2763.0	37.2

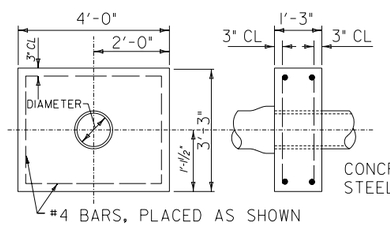

CONCRETE 0.6 CU. YD.
STEEL 16.7 LBS.

12" OR SMALLER WATER MAINS

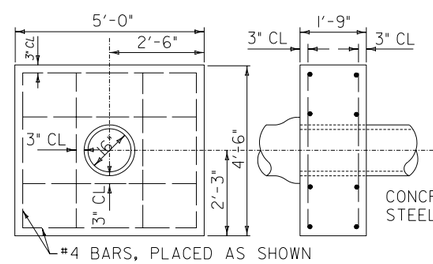

CONCRETE 1.4 CU. YD.
STEEL 45.4 LBS.

16" WATER MAIN

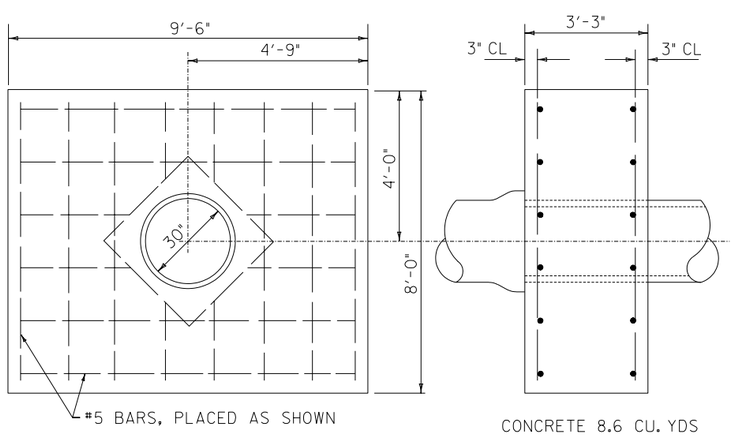

30" WATER MAINS

CONCRETE 8.6 CU. YDS
STEEL 241.3 LBS.

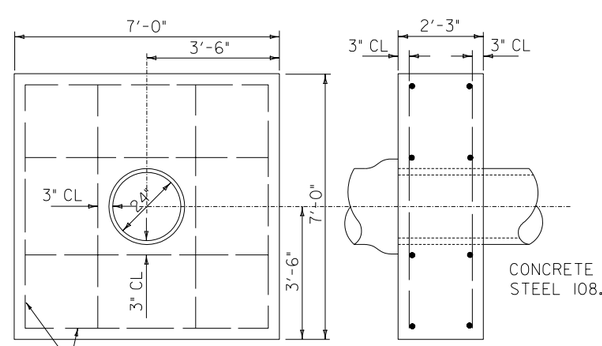

CONCRETE 3.8 CU. YDS.
STEEL 108.5 LBS.

24" WATER MAINS

REINFORCED CONCRETE COLLARS

NOTE: R.C. THRUST COLLARS TO BE BUILT ADJACENT TO VALVES OR AT SPIGOT SIDE OF LAST PIPE CONNECTION.

GENERAL NOTES:

ALL REINFORCING STEEL SHALL BE DEFORMED BARS CONFORMING TO A.S.T.M. SERIAL DESIGNATION A-305-507 AND SHALL SATISFY THE BEND TEST REQUIREMENTS FOR STRUCTURAL GRADE STEEL IN ACCORDANCE WITH THE REQUIREMENTS.

ALL CONCRETE SHALL BE L3500.

MINIMUM DEPTH OF EMBEDMENT FOR REINFORCING STEEL TO BE AS NOTED.

ALL REINFORCING STEEL SHALL BE EPOXY COATED.

REVISIONS		
NO.	BY	DATE
1		
2		
3		
4		
5		
6		
7		
8		
9		
10		

R.C. COLLARS, THRUST BLOCKS ANCHORAGES, TEE BLOCKS AND PLUG BLOCKS

CITY OF LINCOLN, NEBRASKA
OFFICE OF THE CITY ENGINEER

Date: 4-03 / CAW Scale: None

No. Sheets: 1 PLAN NO. L.S.P. 320 Sheet No. 1