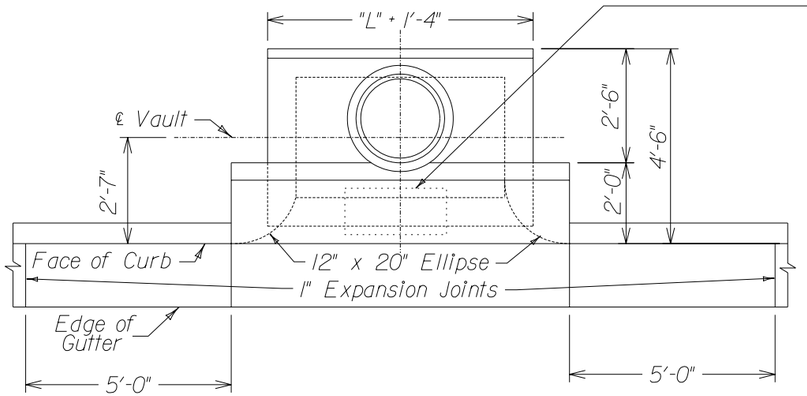

PLAN OF
TYPE "A-2" STORM SEWER INLET

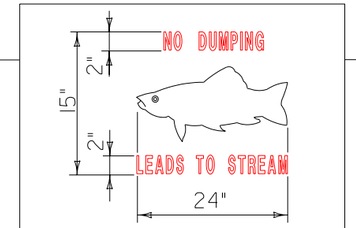

ENVIRONMENT STAMP
IMPRINT TO BE 1/4" DEEP STAMPED
INTO INLET TOP WHEN POURED

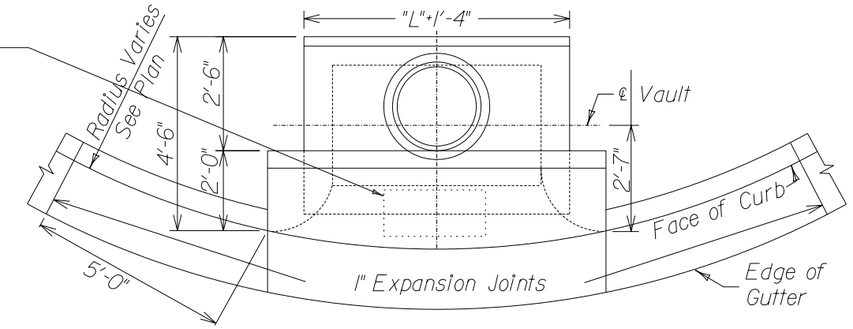

PLAN OF
TYPE "A-2" RADIUS STORM SEWER INLET

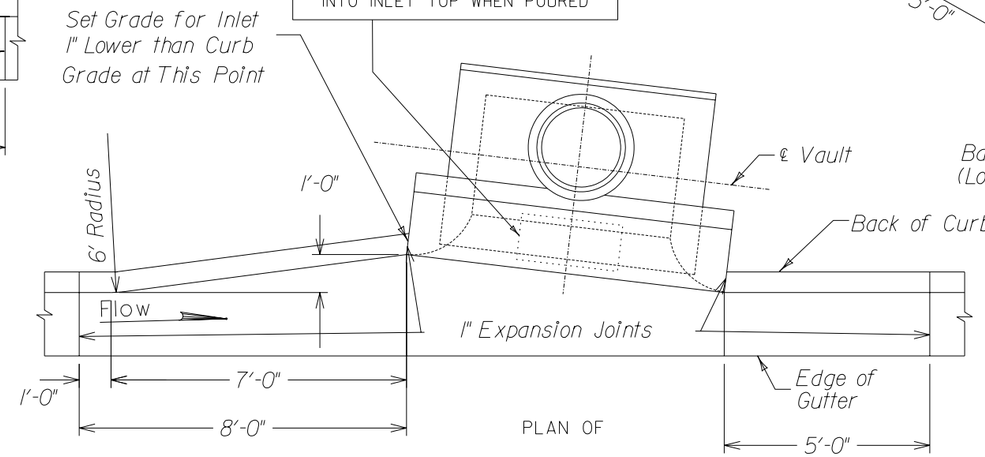

PLAN OF
TYPE "A-2" CANTED STORM SEWER INLET

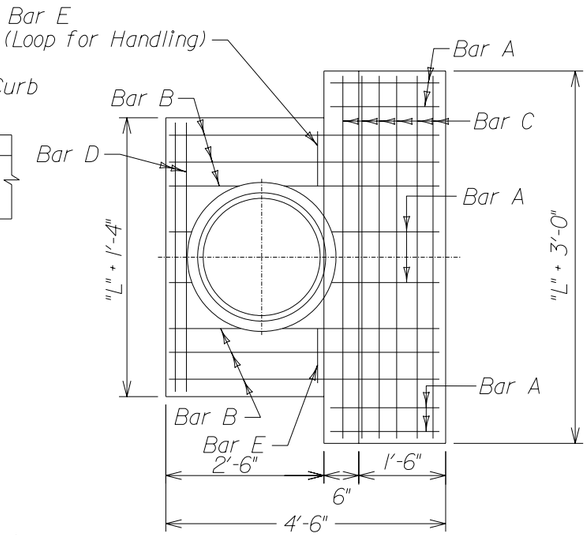

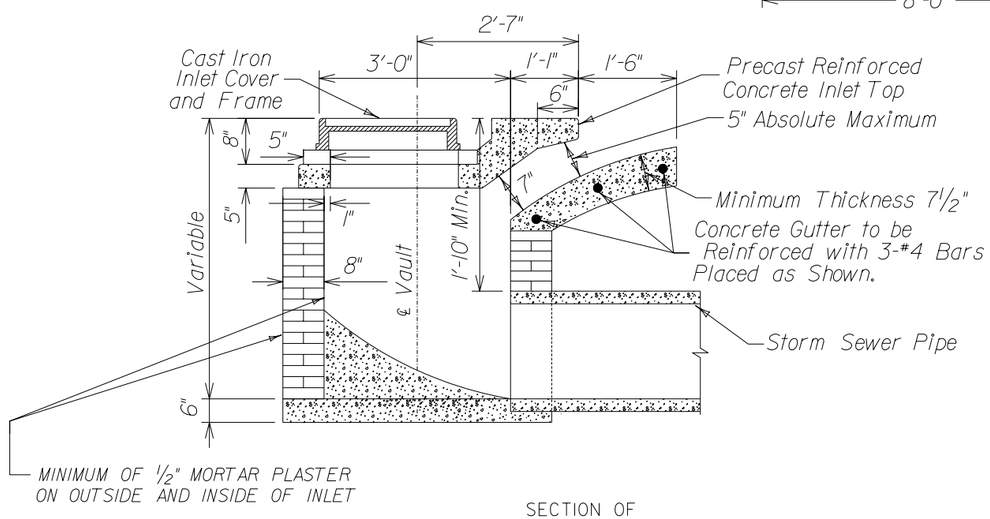

SECTION OF
STORM SEWER INLET

General Notes:

All reinforcing steel shall be deformed bars conforming to A. S. T. M. Serial Designation A-305-507 and shall satisfy the Bend Test Requirements for structural grade steel in accordance with the requirements.

Minimum depth of embedment for reinforcing steel shall be 2" unless otherwise indicated.

All concrete shall be L3500.

Each inlet shall include a cast iron cover and frame. (See L.S.P.-162)

Each inlet shall include length of curb as per specifications.

ALL REINFORCING SHALL BE EPOXY COATED.

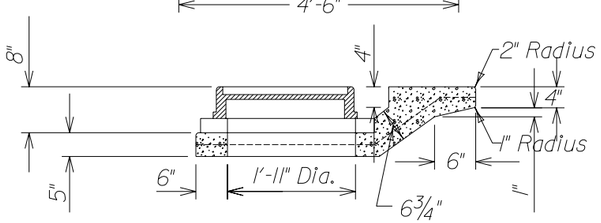

PLAN & SECTIONS OF
PRECAST REINFORCED CONCRETE INLET TOP

SCHEDULE OF REINFORCEMENT
FOR
PRECAST CONCRETE INLET TOP

BAR	SHAPE	INLET OPENING = "L" 72"		
		No.	Size	Length
A	6" 8"	6	#4	1'-9 1/2"
B	8" 8"	10	#4	4'-6"
C		8	#4	8'-9"
D		2	#4	7'-0"
E	8"	2	#4	3'-0"

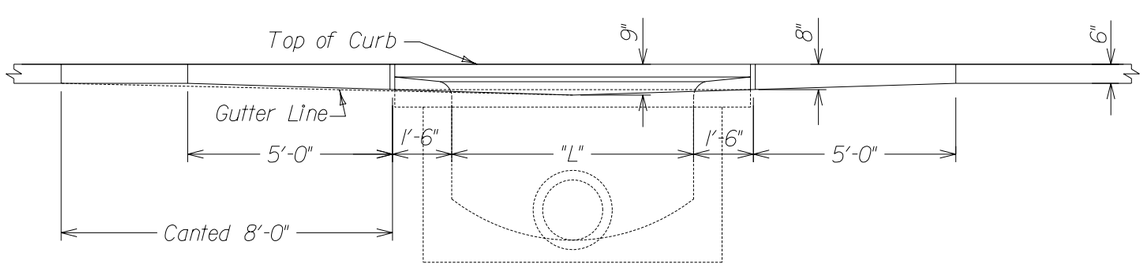

ELEVATION OF
GUTTER DEPRESSION AT FACE OF CURB

REVISIONS		
NO.	BY	DATE
1		
2		
3		
4		
5		
6		
7		
8		
9		
10		

STORM SEWER INLET,
TYPE 'A-2'

CITY OF LINCOLN, NEBRASKA
OFFICE OF THE CITY ENGINEER

Date: 5-03 / CAW Scale: None

No. Sheets: 1 PLAN NO. L.S.P. 101 Sheet No. 1