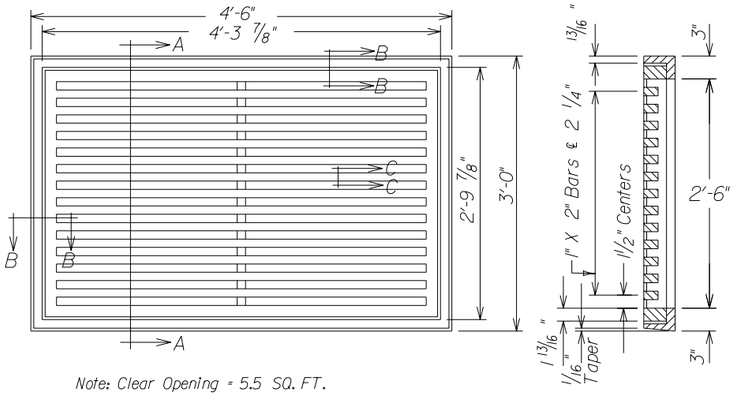

TYPE 'H' GRATE AND FRAME

SECTION A-A

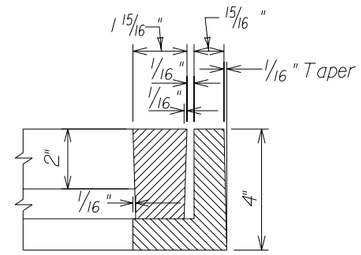

SECTION B-B

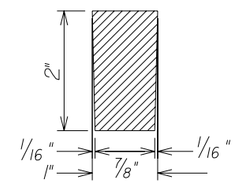

SECTION C-C

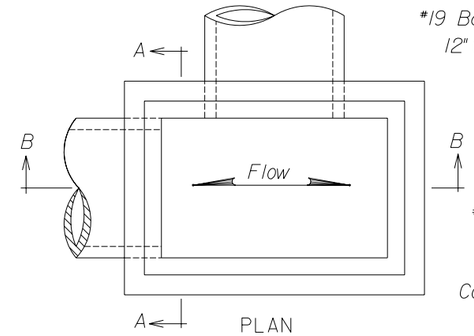

PLAN

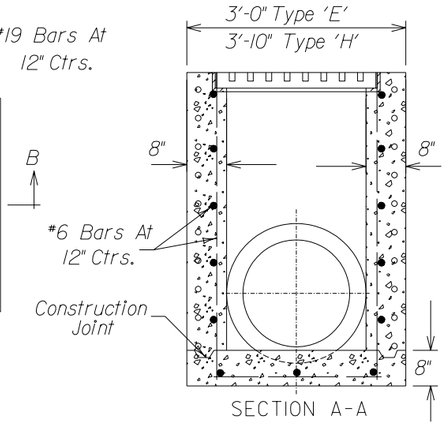

SECTION A-A

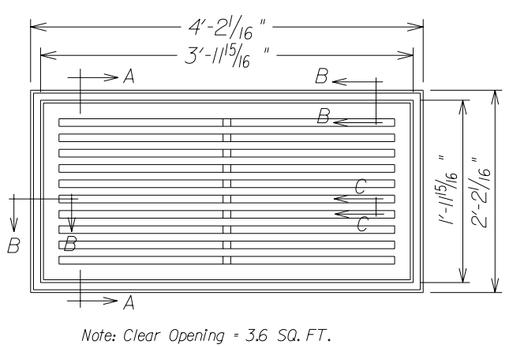

TYPE 'E' GRATE AND FRAME

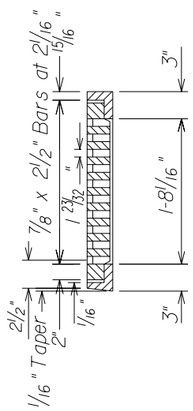

SECTION A-A

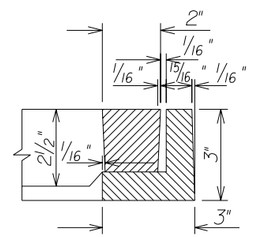

SECTION B-B

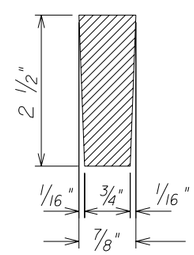

SECTION C-C

APPROX. QUANTITIES FOR DRAINAGE INLETS				
'X' Depth	Type 'E'		Type 'H'	
In Ft.	CONC. CU. YDS.	REINF. STL. LBS.	CONC. CU. YDS.	REINF. STL. LBS.
3.0	1.4	135	1.7	169
4.0	1.7	171	2.1	212
5.0	2.0	207	2.5	256
6.0	2.4	243	2.9	299
7.0	2.7	279	3.3	342
8.0	3.0	315	3.7	385
9.0	3.4	351	4.1	428
Add 0.1	0.033	3.6	0.040	4.3

EACH INLET SHALL INCLUDE A CAST IRON GRATE AND FRAME.

TABLE DOES NOT INCLUDE DEDUCTIONS FOR PIPE OPENING.

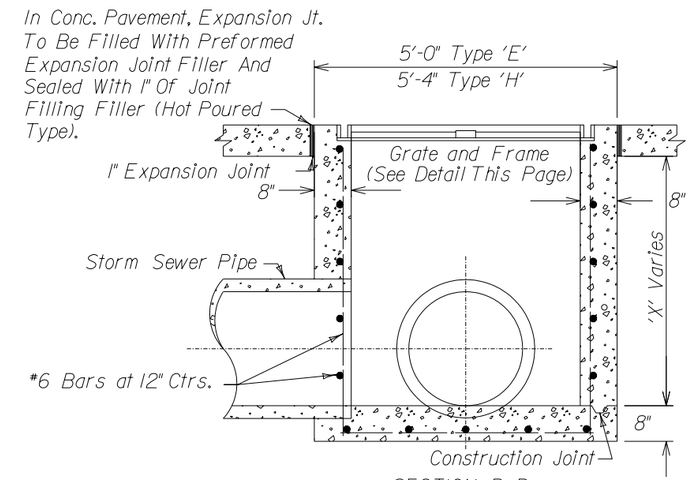

SECTION B-B

TYPE 'E1' AND 'H1' GRATE INLET

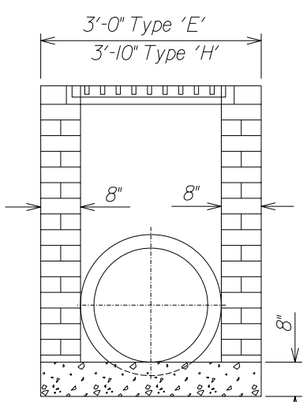

SECTION A-A

TYPE 'E2' AND 'H2' GRATE INLET

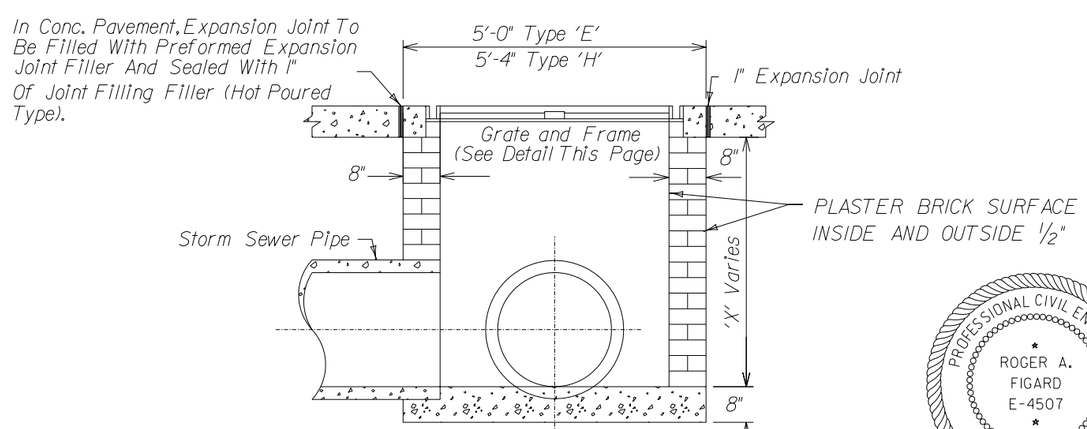

SECTION B-B

TYPE 'E2' AND 'H2' GRATE INLET

General Notes:

All reinforcing steel shall be deformed bars conforming to A.S.T.M. Serial Designation A-305-507 and shall satisfy the Bend Test Requirements for structural grade steel in accordance with the requirements.

All concrete shall be L3500.

Minimum Depth of embedment for reinforcing steel shall be 2" unless otherwise indicated.

All castings to be coated with Bituminous Paint.

BRICK GRATE INLET SHALL NOT EXCEED 72"

ALL REINFORCING STEEL TO BE EPOXY COATED.

PROFESSIONAL CIVIL ENGINEER
ROGER A. FIGARD
E-4507
STATE OF NEBRASKA

REVISIONS		
NO.	BY	DATE
1		
2		
3		
4		
5		
6		
7		
8		
9		
10		

GRATE INLETS, TYPE 'E' AND 'H'

CITY OF LINCOLN, NEBRASKA
OFFICE OF THE CITY ENGINEER

Date: 2-03 / CAW Scale: None

No. Sheets: 1 PLAN NO. L.S.P. 130 Sheet No. 1