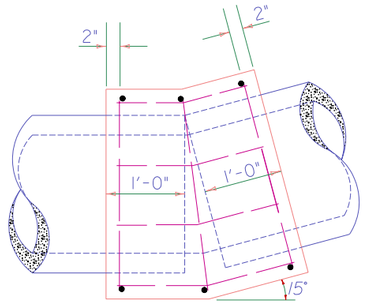

SIDE ELEVATION

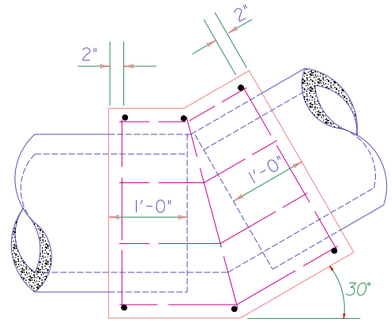

SIDE ELEVATION

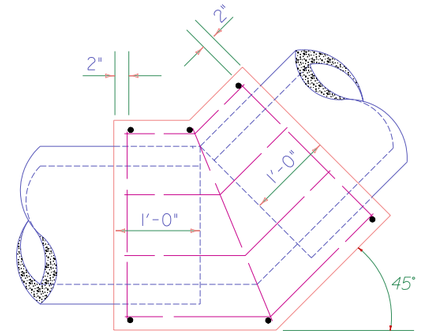

SIDE ELEVATION

R.C. ELBOWS FOR VERTICAL DEFLECTION ONLY

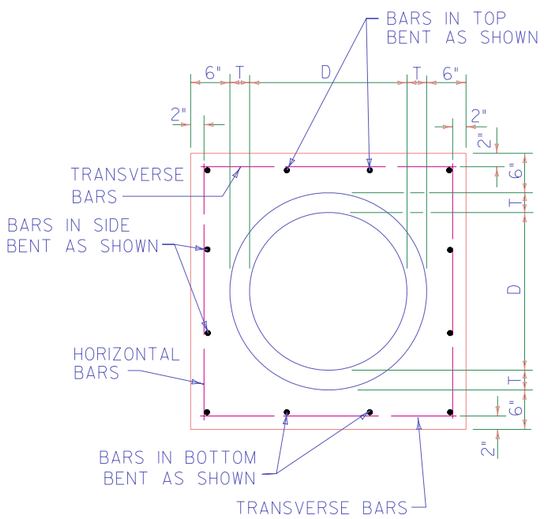

END ELEVATION

R.C. COLLARS

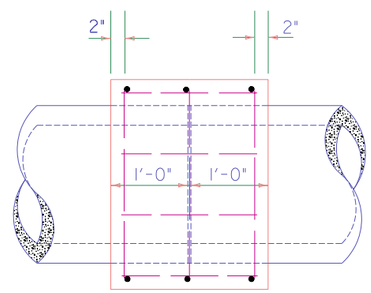

SIDE ELEVATION

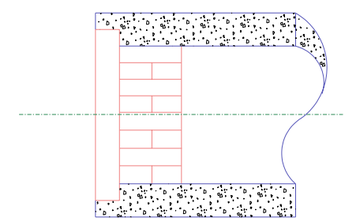

TEMPORARY BRICK PLUG

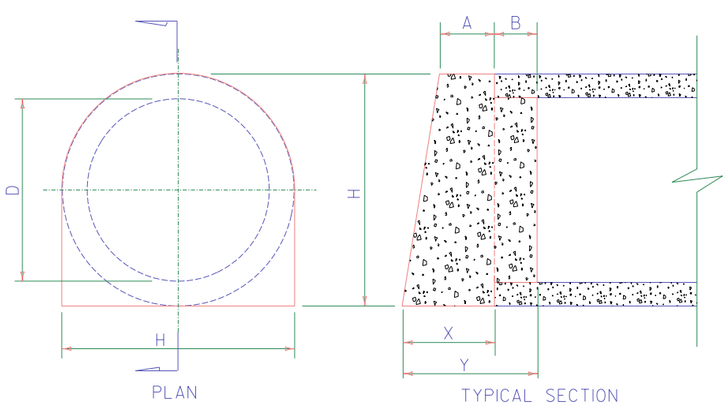

PLAN

TYPICAL SECTION

CONCRETE PLUGS

CONCRETE PLUGS						
D	H	A	B	X	Y	CONC. CU. YDS.
15"	1'-7½"	4"	4"	6"	10"	0.05
18"	1'-11"	4"	4"	6"	10"	0.07
21"	2'-4"	4"	4"	6"	10"	0.12
24"	2'-6"	5"	4"	8"	1'-0"	0.15
30"	3'-1"	5"	4"	8"	1'-0"	0.23
36"	3'-8"	6"	4"	10"	1'-2"	0.39
42"	4'-3"	6"	6"	11"	1'-5"	0.61
48"	4'-10"	7"	8"	1'-0"	1'-8"	0.94
54"	5'-5"	7"	9"	1'-1"	1'-10"	1.27
60"	6'-0"	8"	10"	1'-2"	2'-0"	1.72

PROFESSIONAL CIVIL ENGINEER
ROGER A. FIGARD
E-4507
STATE OF NEBRASKA

REINF. CONCRETE ELBOWS AND COLLARS

PIPE SIZE "D"	KIND	"T"	NUMBER OF BARS				CONC. CU. YDS.	STEEL LBS.
			TRANS.-VERT.	TOP	I-SIDE	BOT.		
15"	COLLAR	2¼"	12	4	2	4	0.36	50
	15°						0.40	54
	30°						0.43	57
	45°						0.50	59
18"	COLLAR	2½"	12	4	2	4	0.42	55
	15°						0.49	59
	30°						0.56	63
	45°						0.64	66
21"	COLLAR	2¾"	12	4	2	4	0.48	57
	15°						0.54	61
	30°						0.63	66
	45°						0.72	69
24"	COLLAR	3"	12	4	2	4	0.53	61
	15°						0.63	65
	30°						0.74	70
	45°						0.86	74
30"	COLLAR	3½"	12	4	2	5	0.63	71
	15°						0.79	76
	30°						0.96	82
	45°						1.14	88
36"	COLLAR	4"	12	4	2	5	0.77	76
	15°						1.01	83
	30°						1.26	91
	45°						1.53	98
42"	COLLAR	4½"	12	5	3	6	0.96	93
	15°						1.32	104
	30°						1.69	115
	45°						2.09	130
48"	COLLAR	5"	12	5	3	6	1.16	98
	15°						1.66	110
	30°						2.19	123
	45°						2.75	137
54"	COLLAR	5½"	12	5	3	6	1.34	108
	15°						2.01	121
	30°						2.70	136
60"	COLLAR	6"	12	5	3	6	1.54	110
	15°						2.29	128
	30°						3.28	144

NOTE: ALL REINF. STEEL SHALL BE #5 BARS, PLACED AS SHOWN.

GENERAL NOTES:
ALL REINFORCING STEEL SHALL BE DEFORMED BARS CONFORMING TO A.S.T.M. SERIAL DESIGNATION A-305-50T AND SHALL SATISFY THE BEND TEST REQUIREMENTS. FOR STRUCTURAL GRADE STEEL IN ACCORDANCE WITH THE REQUIREMENTS.
ALL CONCRETE SHALL BE L3500.
MINIMUM DEPTH OF EMBEDMENT FOR REINFORCING STEEL TO BE AS NOTED.
ALL REINFORCING STEEL SHALL BE EPOXY COATED.

REVISIONS		
NO.	BY	DATE
1		
2		
3		
4		
5		
6		
7		
8		
9		
10		

R.C. COLLARS AND ELBOWS AND PLUGS

CITY OF LINCOLN, NEBRASKA
OFFICE OF THE CITY ENGINEER

Date: 2-03 / CAW Scale: None

No. Sheets: 1 PLAN NO. L.S.P. 150 Sheet No. 1