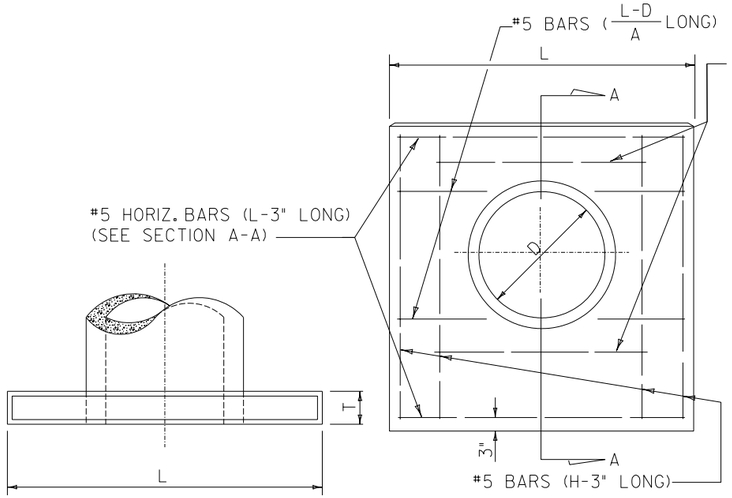

TYPE "A" HEADWALL

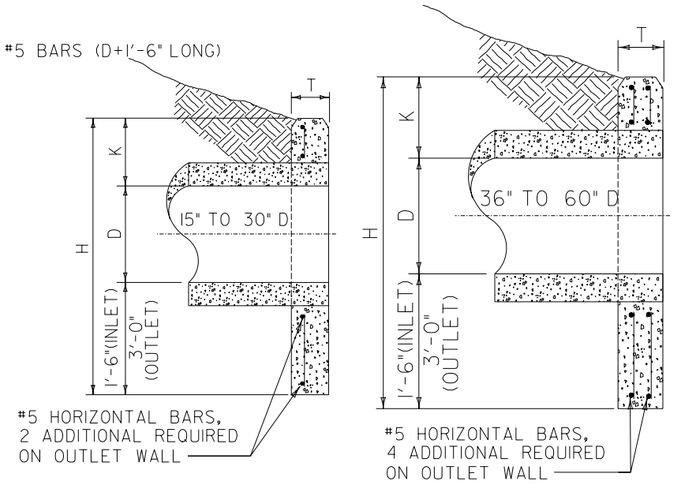

SECTION A-A

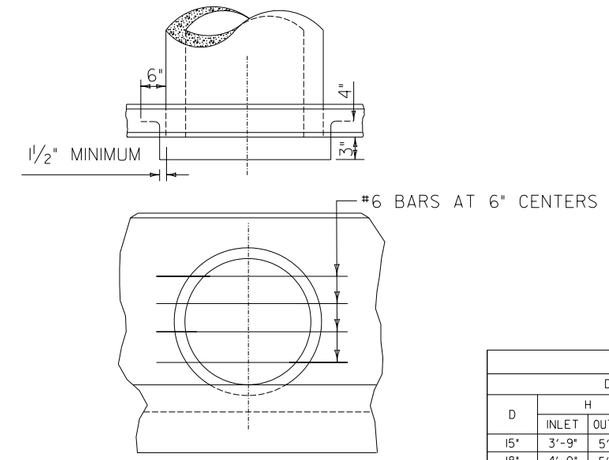

R.C. PIPE END GUARD

END GUARD			
PIPE SIZE D	No. OF VERT. BARS	No. OF HORIZ. BARS	LBS. STEEL EA. HEADWALL
15"	0	2	14
18"	0	2	15
21"	1	2	24
24"	1	3	34
30"	1	4	46
36"	1	5	61
42"	2	6	88
48"	2	7	107
54"	2	8	127
60"	3	9	163

TYPE "A" HEADWALL								
DIMENSIONS						INLET		OUTLET	
D	H INLET	H OUTLET	L	K	T	CONC. CU. YDS.	STEEL LBS.	CONC. CU. YDS.	STEEL LBS.
15"	3'-9"	5'-3"	3'-3"	1'-0"	6"	0.19	31	0.28	43
18"	4'-0"	5'-6"	3'-6"	1'-0"	6"	0.21	33	0.30	46
21"	4'-3"	5'-9"	4'-6"	1'-0"	6"	0.28	38	0.41	53
24"	4'-6"	6'-0"	4'-10"	1'-0"	6"	0.31	41	0.47	55
30"	5'-1"	6'-7"	5'-10"	1'-1"	6"	0.34	47	0.57	65
36"	5'-7"	7'-1"	6'-8"	1'-1"	8"	0.66	105	0.91	145
42"	6'-2"	7'-8"	7'-10"	1'-2"	8"	0.85	120	1.13	164
48"	6'-8"	8'-2"	9'-10"	1'-2"	8"	1.03	134	1.36	183
54"	7'-3"	8'-9"	10'-2"	1'-3"	8"	1.25	149	1.63	202
60"	7'-9"	9'-3"	11'-2"	1'-3"	8"	1.44	161	1.85	219
NOTE: ALL REINFORCING STEEL SHALL BE #5 BARS, PLACED AS SHOWN.									

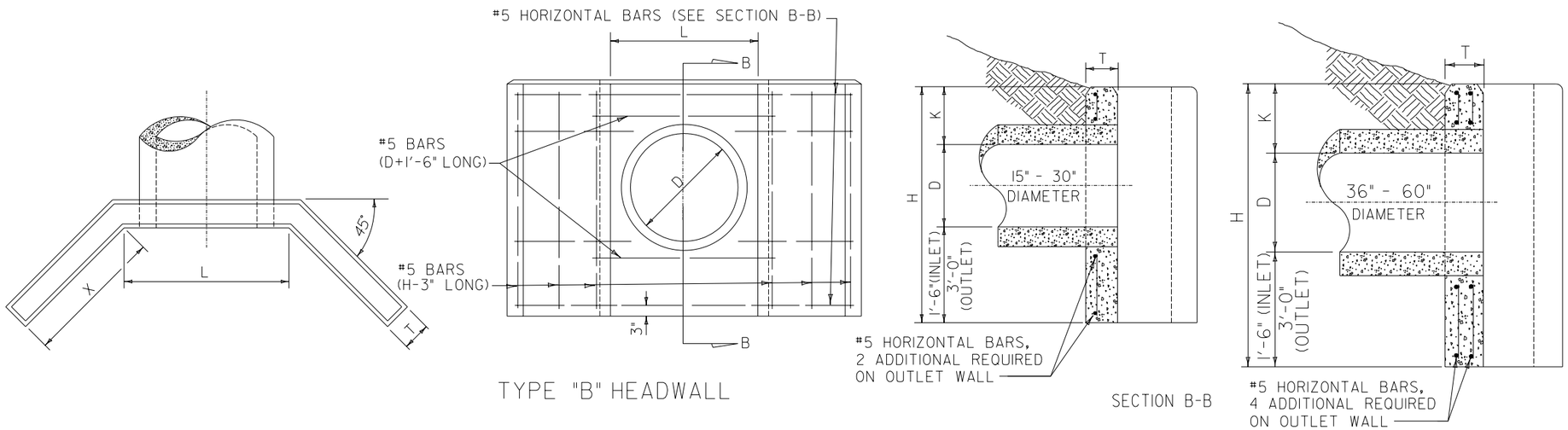

TYPE "B" HEADWALL

SECTION B-B

TYPE "B" HEADWALL										
DIMENSIONS							INLET		OUTLET	
D	H INLET	H OUTLET	L	K	X	T	CONC. CU. YDS.	STEEL LBS.	CONC. CU. YDS.	STEEL LBS.
15"	3'-9"	5'-3"	2'-2"	1'-0"	1'-0"	6"	0.29	43	0.42	64
18"	4'-0"	5'-6"	2'-5"	1'-0"	1'-0"	6"	0.32	46	0.46	68
21"	4'-3"	5'-9"	2'-9"	1'-0"	1'-3"	6"	0.39	51	0.55	75
24"	4'-6"	6'-0"	3'-0"	1'-0"	1'-6"	6"	0.46	55	0.64	81
30"	5'-1"	6'-7"	3'-7"	1'-1"	2'-0"	6"	0.63	66	0.86	87
36"	5'-7"	7'-1"	4'-2"	1'-1"	2'-0"	8"	0.95	146	1.27	205
42"	6'-2"	7'-8"	4'-9"	1'-2"	2'-6"	8"	1.22	163	1.60	234
48"	6'-8"	8'-2"	5'-4"	1'-2"	3'-0"	8"	1.51	182	1.95	261
54"	7'-3"	8'-9"	5'-11"	1'-3"	3'-6"	8"	1.85	203	2.35	287
60"	7'-9"	9'-3"	6'-6"	1'-3"	3'-6"	8"	2.00	214	2.52	303
NOTE: ALL REINFORCING STEEL SHALL BE #5 BARS, PLACED AS SHOWN.										

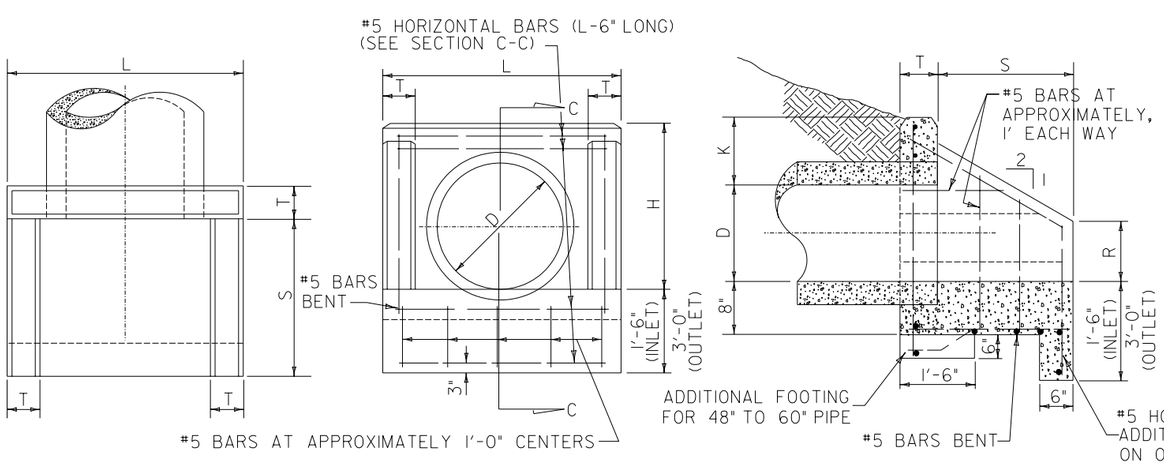

TYPE "C" HEADWALL

SECTION C-C

TYPE "C" HEADWALL										
DIMENSIONS							INLET		OUTLET	
D	H	L	K	S	R	T	CONC. CU. YDS.	STEEL LBS.	CONC. CU. YDS.	STEEL LBS.
15"	2'-3"	3'-2"	1'-0"	1'-10"	1'-0"	6"	0.43	50	0.52	60
18"	2'-6"	3'-5"	1'-0"	2'-1"	1'-2"	6"	0.51	59	0.60	72
21"	2'-9"	3'-9"	1'-0"	2'-4"	1'-3"	6"	0.60	73	0.71	87
24"	3'-0"	4'-0"	1'-0"	2'-6"	1'-5"	6"	0.68	79	0.79	93
30"	3'-7"	4'-7"	1'-1"	3'-1"	1'-8"	6"	0.93	102	1.05	119
36"	4'-1"	5'-6"	1'-1"	4'-0"	1'-9"	8"	1.56	150	1.71	171
42"	4'-8"	6'-1"	1'-2"	4'-10"	1'-11"	8"	2.02	189	2.19	213
48"	5'-2"	6'-8"	1'-2"	5'-9"	2'-0"	8"	2.72	245	2.90	269
54"	5'-9"	7'-3"	1'-3"	6'-7"	2'-3"	8"	3.32	305	3.52	332
60"	6'-3"	7'-10"	1'-3"	7'-4"	2'-3"	8"	3.88	334	4.10	362
NOTE: ALL REINFORCING STEEL SHALL BE #5 BARS, PLACED AS SHOWN.										

GENERAL NOTES:

ALL REINFORCING STEEL SHALL BE DEFORMED BARS CONFORMING TO A.S.T.M. SERIAL DESIGNATION A-305-507 AND SHALL SATISFY THE BEND TEST REQUIREMENTS FOR STRUCTURAL GRADE STEEL IN ACCORDANCE WITH THE REQUIREMENTS.

ALL CONCRETE SHALL BE L3500.

MINIMUM DEPTH OF EMBEDMENT FOR REINFORCING STEEL SHALL BE 2" UNLESS OTHERWISE INDICATED.

GROOVE END OF CONCRETE PIPE TO FACE UPSTREAM.

ALL REINFORCING STEEL SHALL BE EPOXY COATED.

INSTALL END GUARD ON INLET ENDS OF STORM SEWER SYSTEM ONLY

REVISIONS		
NO.	BY	DATE
1		
2		
3		
4		
5		
6		
7		
8		
9		
10		

HEADWALLS, TYPE 'A', 'B' AND 'C'

CITY OF LINCOLN, NEBRASKA
OFFICE OF THE CITY ENGINEER

Date: 2-03 / CAW Scale: None

No. Sheets: 1 PLAN NO. L.S.P. 160 Sheet No. 1