* DIMENSION OF PL BEFORE BENDING

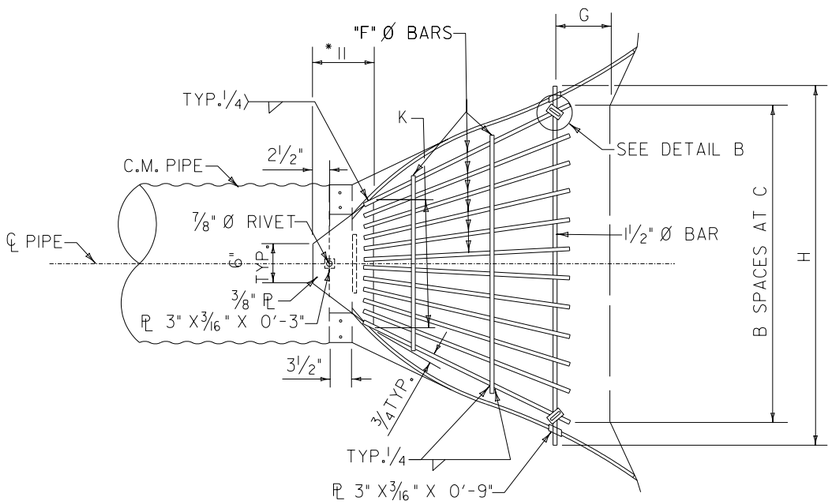

PLAN FOR BAR GRATE

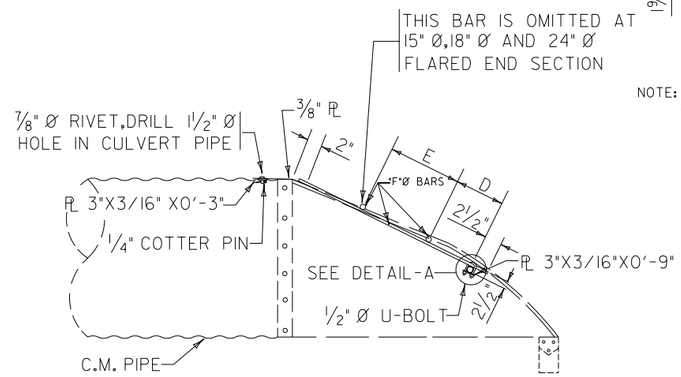

ELEVATION OF BAR GRATE

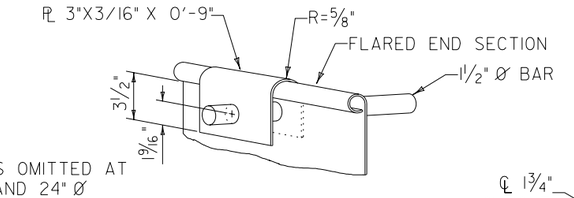

DETAIL-A

NOTE: 2-PL 3" X 3/16" X 0'-9" REQUIRED PER ASSEMBLY, 2-PER SECTION

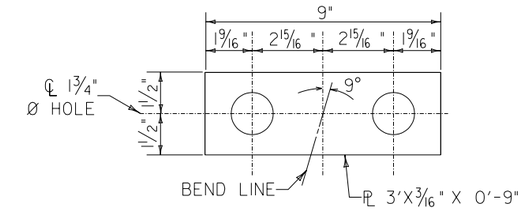

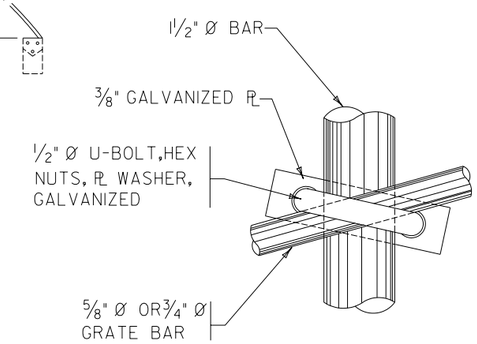

DETAIL-B

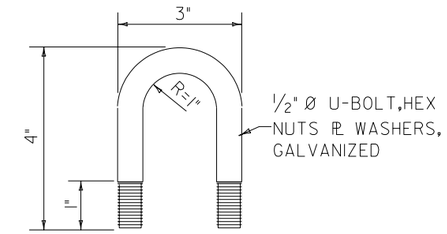

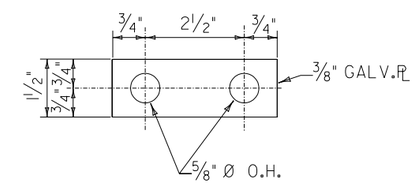

U-BOLT AND PLATE DETAIL

BAR GRATE FOR METAL FLARED END SECTION

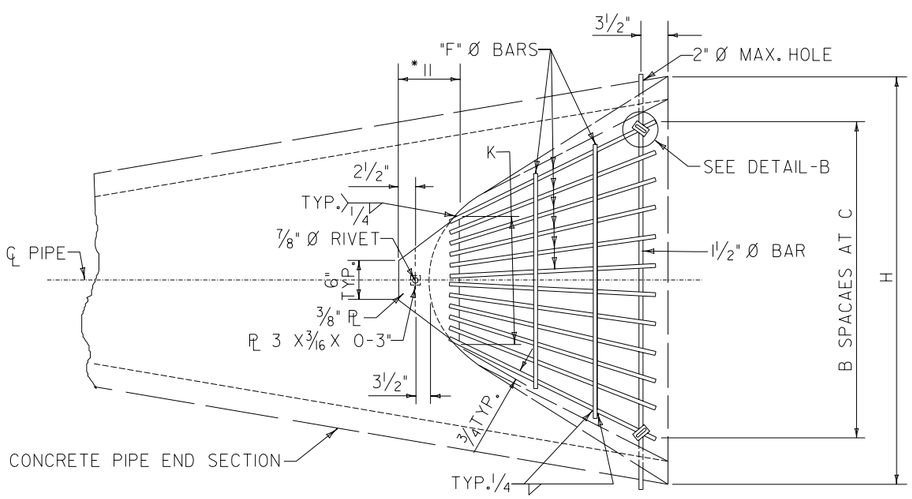

PLAN OF BAR GRATE

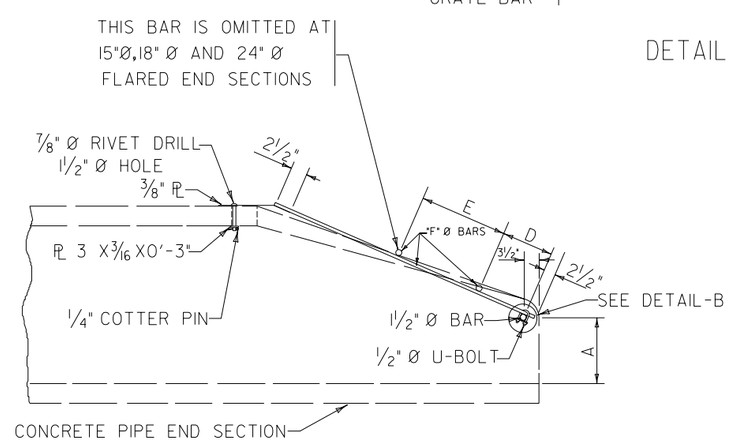

ELEVATION OF BAR GRATE

BAR GRATE FOR CONCRETE PIPE END SECTION

ALL BARS USED IN GRATES SHALL CONFORM TO THE REQUIREMENTS OF A.S.T.M. A575 GRADE 1020 STEEL.
THE BAR GRATE MAY BE SHOP ASSEMBLED WITH THE FLARED END SECTIONS.
THREE SEPARATE COATS OF PAINT SHALL BE APPLIED TO THE GRATES. THE FIRST TWO COATS SHALL BE PRIMER AND THE THIRD COAT SHALL BE GREEN BRIDGE PAINT. ALL PAINTING MAY BE DONE IN THE SHOP.

ALL BARS SHALL BE EPOXY COATED.

BAR GRATE DATA

	A	B	C	D	E	F	G	H	K
15" Ø PIPE	5"	4	2'-0"	6"	———	5/8"	6"	2'-11"	1'-4"
18" Ø PIPE	8"	5	2'-6"	6"	———	5/8"	8"	3'-6"	1'-4"
24" Ø PIPE	8 1/2"	7	3'-6"	9"	———	5/8"	8"	4'-7"	1'-8"
30" Ø PIPE	11"	9	4'-6"	1'-0"	1'-6"	3/4"	1'-0"	5'-8"	1'-8"
36" Ø PIPE	1'-2"	11	5'-6"	1'-0"	1'-6"	3/4"	1'-0"	6'-9"	2'-0"

NOTE:
INSTALL BAR GRATE ON INLET ENDS OF STORM SEWER SYSTEM ONLY.

PROFESSIONAL CIVIL ENGINEER
ROGER A. FIGARD
E-4507
STATE OF NEBRASKA

REVISIONS		
NO.	BY	DATE
1		
2		
3		
4		
5		
6		
7		
8		
9		
10		

BAR GRATE FOR FLARED END SECTIONS

CITY OF LINCOLN, NEBRASKA
OFFICE OF THE CITY ENGINEER

Date: 2-03 / CAW Scale: None

No. Sheets: 1 PLAN NO. L.S.P. 161 Sheet No. 1