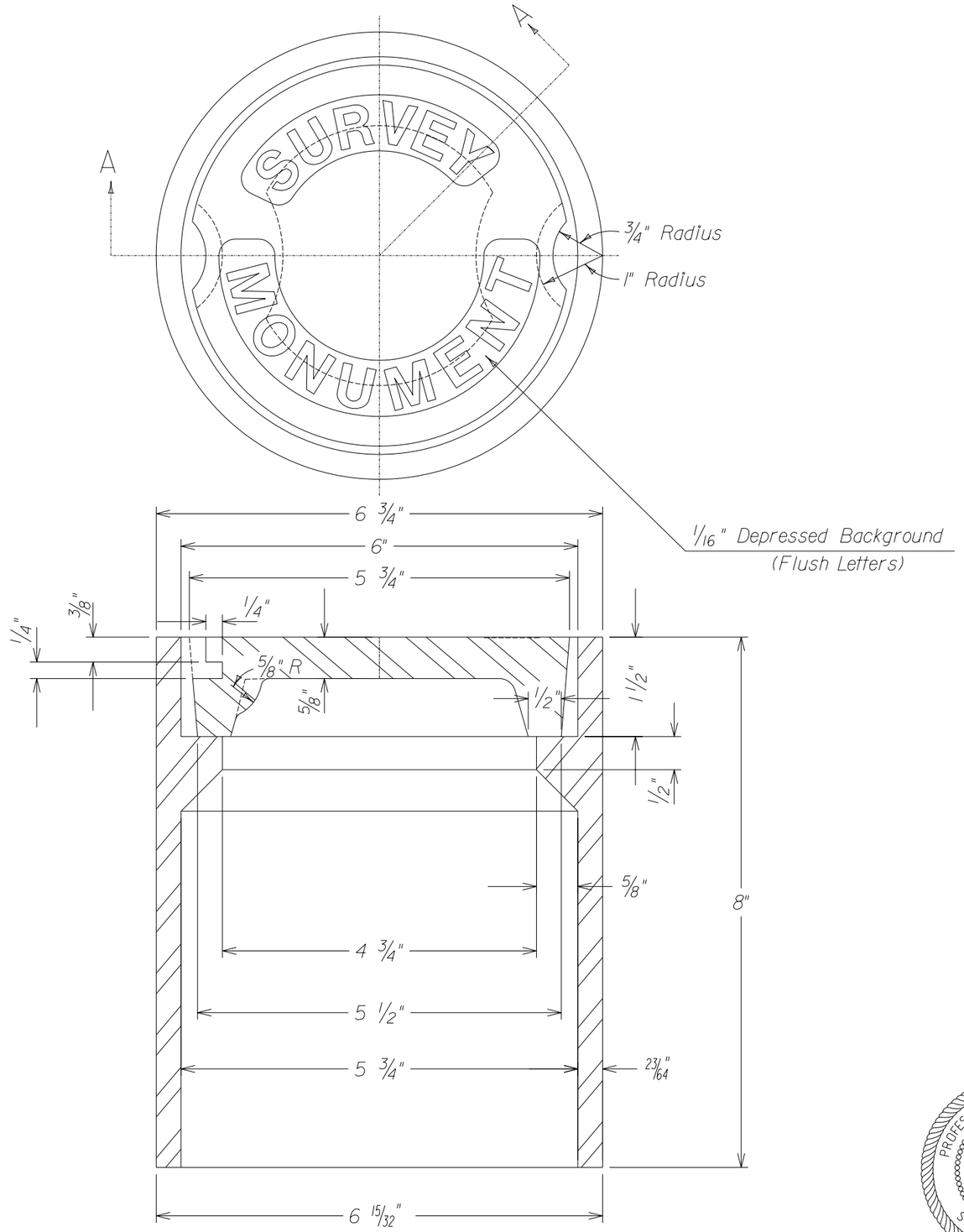

SECTION A-A

STANDARD MONUMENT BOX

Note:

Standard Survey Monument Boxes Shall Be Placed At The ℄ Of All Street Intersections, P.C.H.C., P.C.C.H.C., P.R.C.H.C., P.T.H.C., Section Lines. As Shown On The Plans Or As Directed By The Engineer.

REVISIONS		
NO.	BY	DATE
1		
2		
3		
4		
5		
6		
7		
8		
9		
10		

SURVEY MONUMENT BOX

CITY OF LINCOLN, NEBRASKA
OFFICE OF THE CITY ENGINEER

Date: 2-03 / CAW Scale: None

No. Sheets: 1 PLAN NO. L.S.P. 163 Sheet No. 1