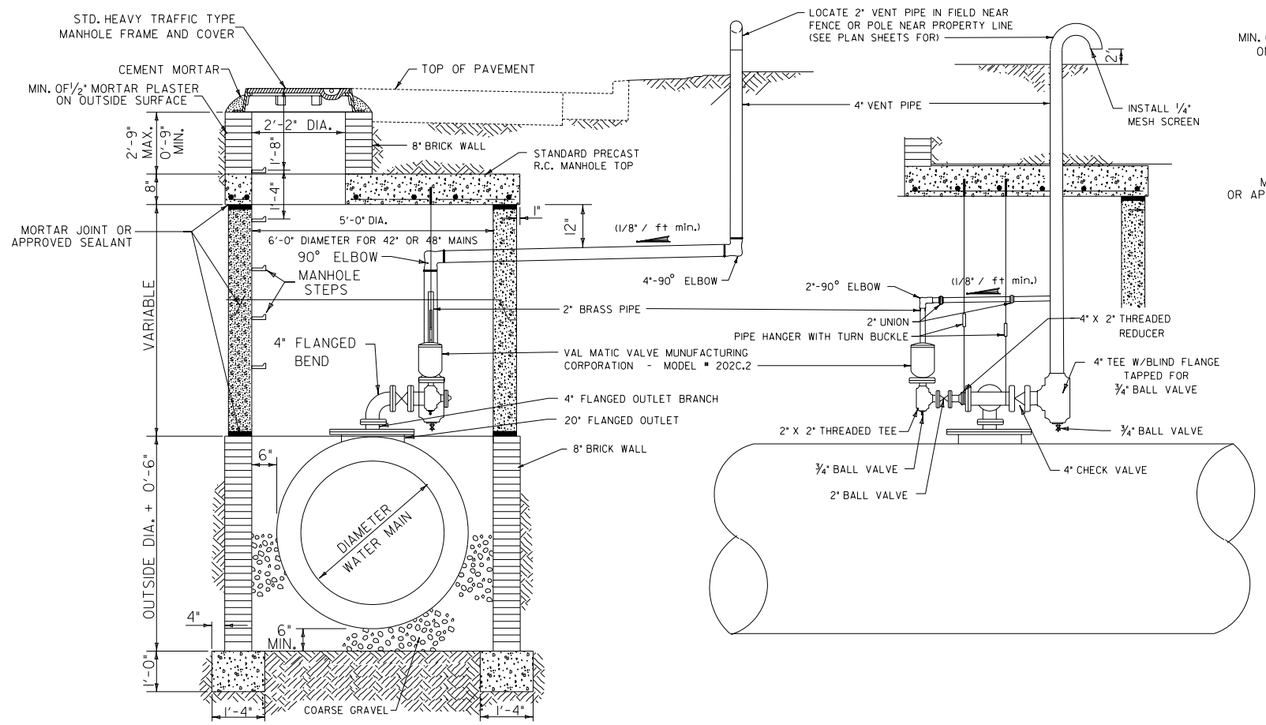

AIR RELIEF VAULT INSTALLATION

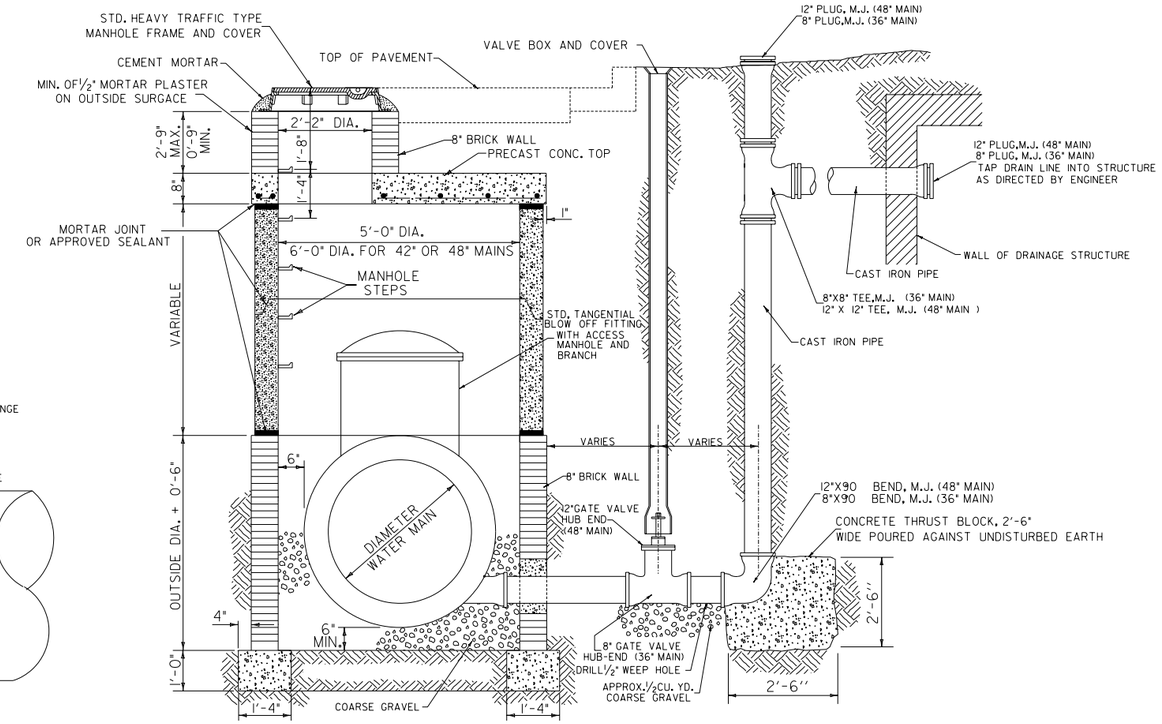

BLOW OFF VALVE INSTALLATION

GENERAL NOTES:

THE CAST IRON MANHOLE RING SHALL SET IN A BED OF MORTAR, AND CAREFULLY ADJUSTED TO PROPOSED GRADE.

MANHOLE RING AND COVER SHALL BE CITY OF LINCOLN HEAVY TRAFFIC TYPE. (SEE L.S.P.-162)

MANHOLE STEPS SHALL BE CITY OF LINCOLN STANDARD MANHOLE STEPS. (SEE L.S.P.-162)

ALL REINFORCING STEEL SHALL BE EPOXY COATED.

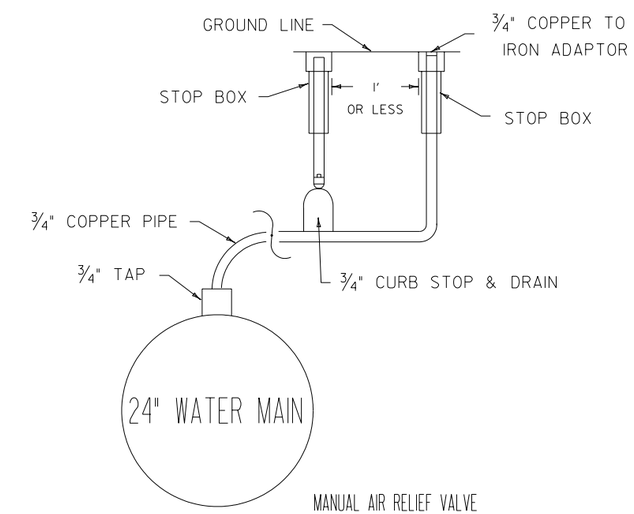

MANUAL AIR RELIEF VALVE

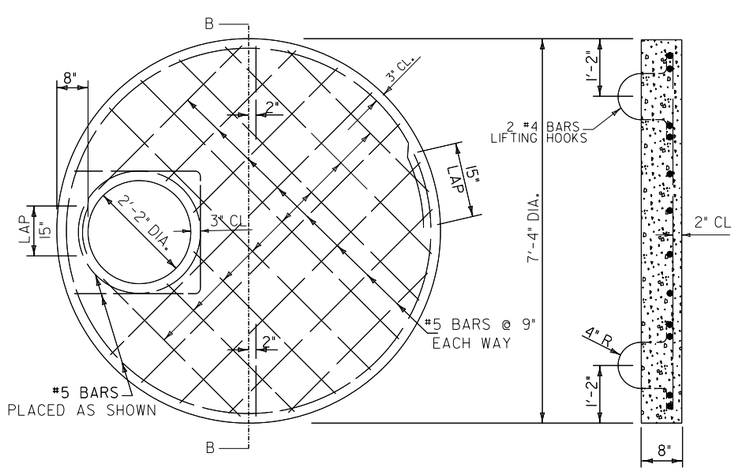

PRECAST R.C. MANHOLE TOP FOR 6'-0" R.C. PIPE

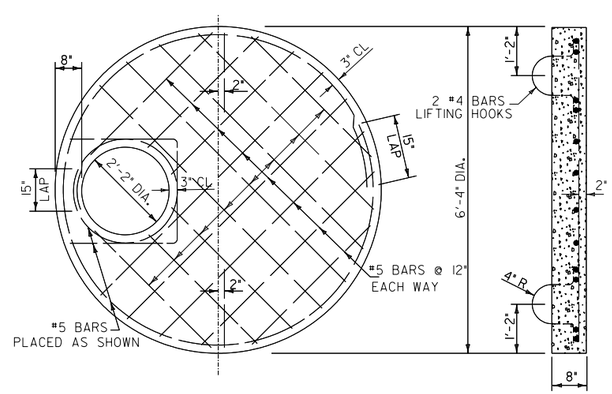

PRECAST R.C. MANHOLE TOP FOR 5'-0" R.C. PIPE

REVISIONS		
NO.	BY	DATE
1		
2		
3		
4		
5		
6		
7		
8		
9		
10		

WATER MAIN VALVE MANHOLES, AIR RELIEFS AND BLOW OFFS

CITY OF LINCOLN, NEBRASKA
OFFICE OF THE CITY ENGINEER

Date: 5-03 / WLB, CAW Scale: None

No. Sheets		Sheet No.
1	PLAN NO. L.S.P. 310	1