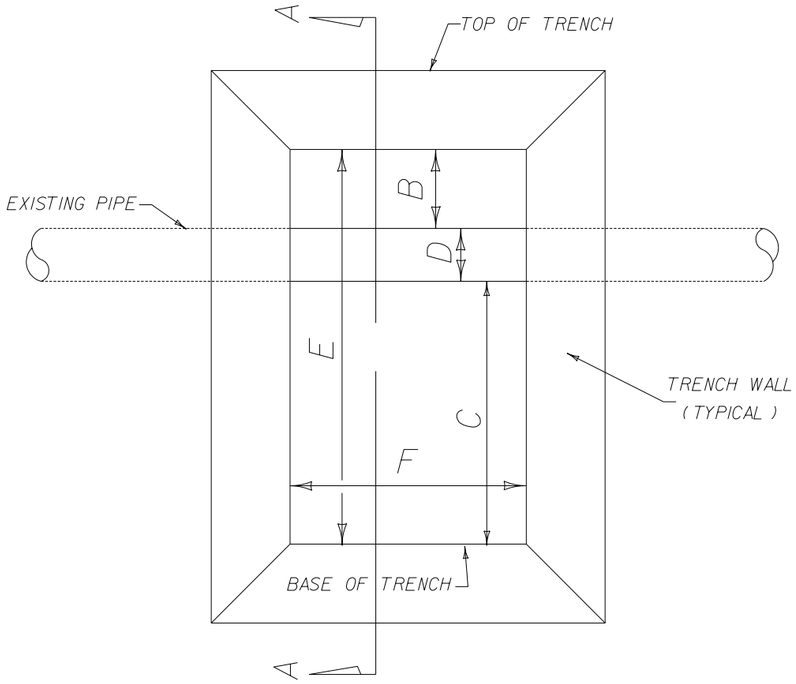

TOP VIEW

NO SCALE

NOTE:
ALL DIMENSIONS INSIDE OF EXCAVATION FOR TAP ARE MINIMUM DIMENSIONS AT BASE OF EXCAVATION.

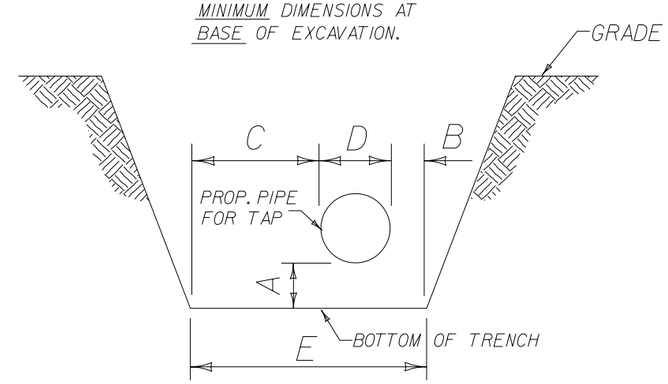

REQUIREMENT:

SLOPE OF TRENCH WALLS AND/OR TRENCH PROTECTION MUST MEET O.S.H.A. STANDARDS, NO EXCEPTIONS.

SECTION A-A

NO SCALE

	A	B	C	D	E	F
TAPPING SLEEVE AND VALVE	12"	12"	6'-0"	10" OR LESS	8' MIN.	4'-0"
			7'-0"	12" OR MORE	9' MIN.	
WATER SERVICE TAP	6"	12"	3' MIN.	16" OR LESS	5'-0"	3'-0"
WASTEWATER SERVICE TAP	6"	12"	3' MIN.	15" OR LESS	5'-0"	3'-0"

REVISIONS		
NO.	BY	DATE
1		
2		
3		
4		
5		
6		
7		
8		
9		
10		

TAPPING EXCAVATION PIT

CITY OF LINCOLN, NEBRASKA
OFFICE OF THE CITY ENGINEER

Date: 2-03 / CAW Scale: None

No. Sheets 1 PLAN NO. L.S.P. 340 Sheet No. 1