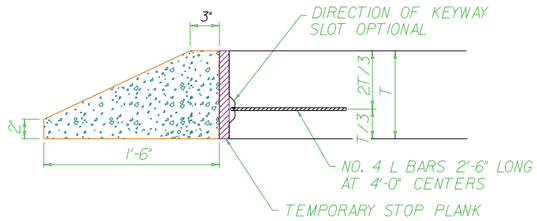

DETAIL OF
CONCRETE HEADER

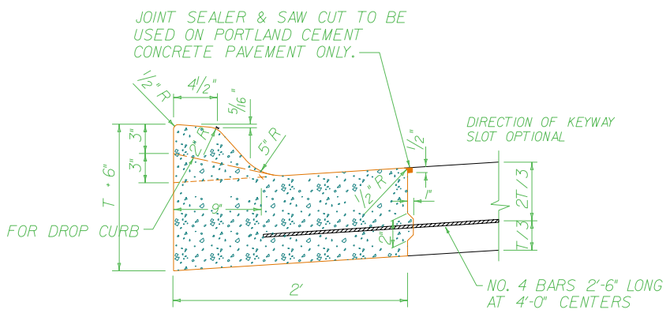

DETAIL OF
COMBINED CURB AND GUTTER

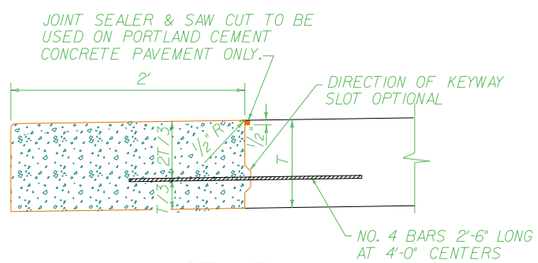

DETAIL OF
24" CONCRETE GUTTER PAN

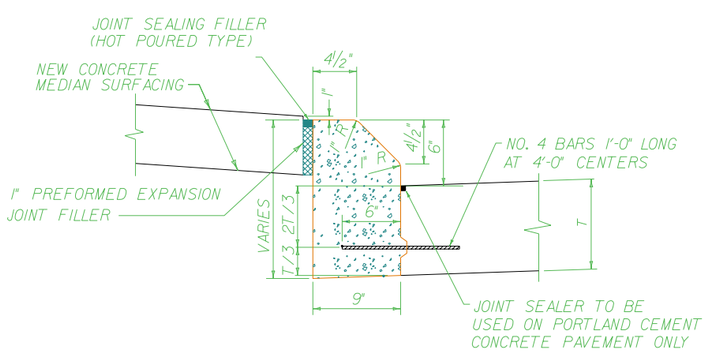

DETAIL OF
CONCRETE MEDIAN CURB

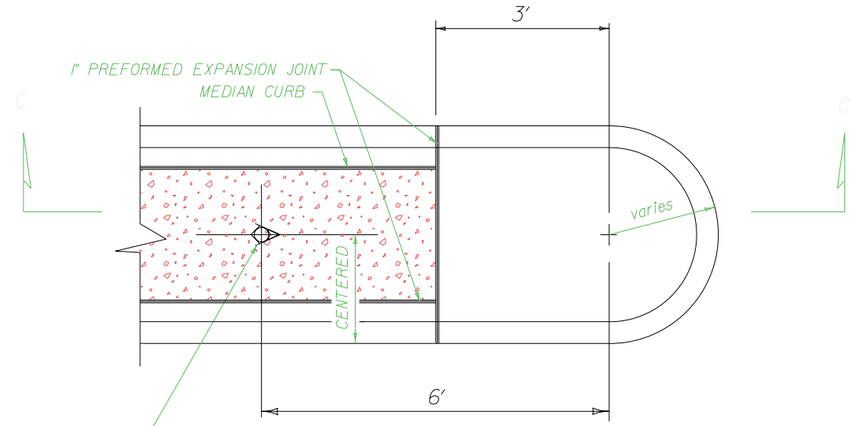

PLAN

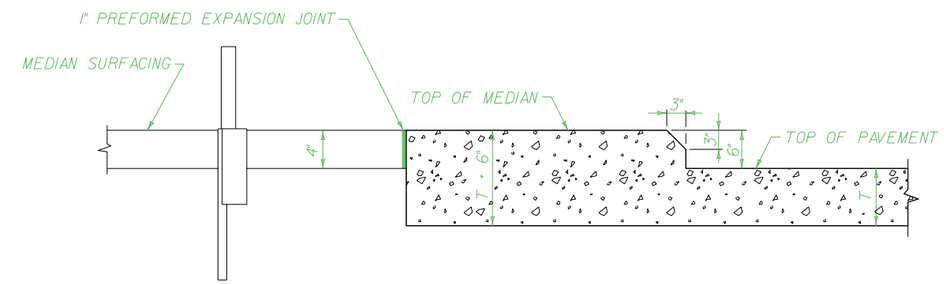

SECTION C - C

TYPICAL DETAILS OF
CONCRETE MEDIAN NOSE

NOTES:
ALL CONCRETE SHALL BE L-3500 OR LC-3500.
1" PREFORMED EXPANSION JOINT FILLER SHALL BE PLACED THROUGH ALL CURBS OPPOSITE PAVEMENT EXPANSION JOINTS OR AS DIRECTED BY ENGINEER.
T = THICKNESS OF PAVEMENT.
KEYWAY DIRECTION IS OPTIONAL.

PROFESSIONAL CIVIL ENGINEER
ROGER A. FIGARD
E-4507
STATE OF NEBRASKA

REVISIONS		
NO.	BY	DATE
1		
2		
3		
4		
5		
6		
7		
8		
9		
10		

CURB DETAILS

CITY OF LINCOLN, NEBRASKA
OFFICE OF THE CITY ENGINEER

Date: 2-03 / CAW Scale: None

No. Sheets: 1 PLAN NO. L.S.P. 651 Sheet No. 1