9 DEC 2010

DETACHED ACCESSORY BUILDING

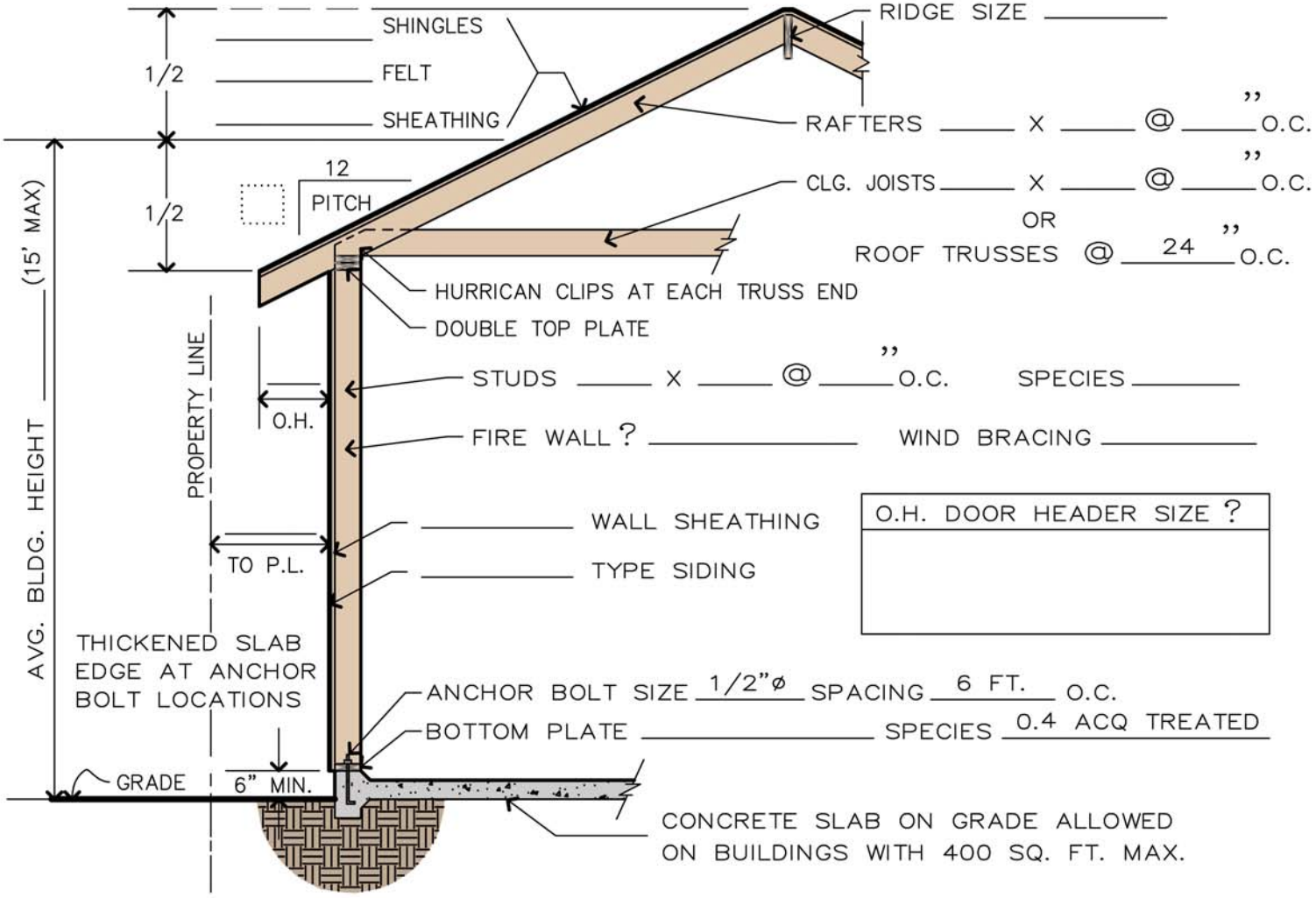

FROST - FREE FOOTING •

* FOR BUILDINGS OVER 400 SQ. FT.

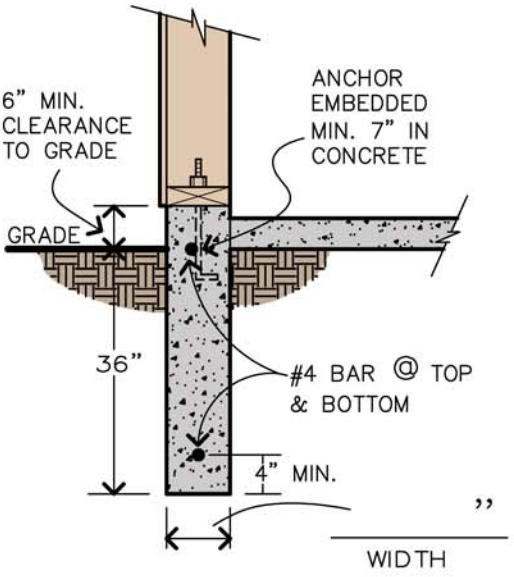

• MONOLITHIC SLAB •

Grade must be relatively level
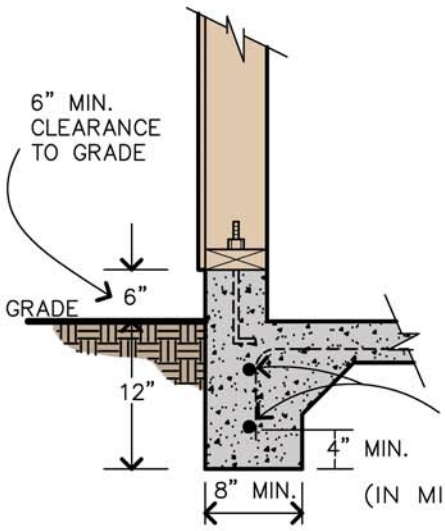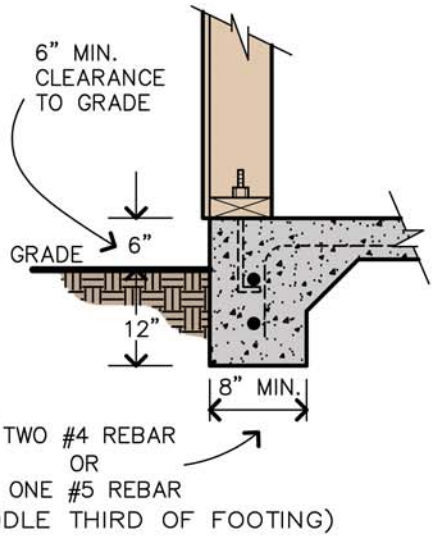
OPTIONAL FOR BUILDINGS LESS THAN 500 SQ. FT.