CHAPTER 9

EROSION AND SEDIMENT CONTROL

13 April 2007

Chapter Nine - Erosion And Sediment Control

Table Of Contents

9.1 Purpose And Scope . . . 9 - 1
9.2 Fundamentals of the Erosion Process . . . 9 - 1
9.2.1 Erosion Types . . . 9 - 1
9.2.2 Factors Influencing Erosion . . . 9 - 3
9.3 SWPPP Requirements for Construction Activity . . . 9 - 4
9.3.1 Summary of Required SWPPP Items for Construction Activity. . . . 9 - 4
9.3.2 General Information for Construction Activity SWPPP's . . . 9 - 8
9.3.3 General Requirements for Construction Activity SWPPP's . . . 9 - 8
9.3.4 Common SWPPP Objectives . . . 9 - 9
9.3.5 SWPPP Development - Site Assessment and Planning . . . 9 - 10
9.3.6 SWPPP Requirements for Individual Site Construction . . . 9 - 12
9.3.7 SWPPP Erosion And Sediment Control Requirements . . . 9 - 14
9.3.8 Good Housekeeping BMP's . . . 9 - 16
9.3.9 Inspection, Maintenance, and Enforcement Procedures . . . 9 - 17
9.4 Best Management Practice Selection . . . 9 - 19
9.4.1 Steps in Selection of Control Measures . . . 9 - 19
9.5 Best Management Practice Design . . . 9 - 20
9.5.1 Introduction . . . 9 - 20
9.5.2 Vegetated Buffer/Filter Strip . . . 9 - 20
9.5.3 Silt Fence . . . 9 - 22
9.5.4 Silt Fence Installation Machines . . . 9 - 23
9.5.5 Wattle Barriers . . . 9 - 28
9.5.6 Compost Berms . . . 9 - 30
9.5.7 Storm Drain Inlet Protection . . . 9 - 32
9.5.8 Outlet Protection . . . 9 - 41
9.5.9 Scour Protection Mat . . . 9 - 46
9.5.10 Diversions . . . 9 - 48
9.5.11 Check Dams . . . 9 - 51
9.5.12 Construction Entrance . . . 9 - 55
9.5.13 Temporary Culvert Stream Crossing . . . 9 - 58
9.5.14 Temporary Sediment Trap . . . 9 - 61
9.5.15 Temporary Sediment Basin . . . 9 - 64
9.5.16 Temporary Seeding . . . 9 - 68
9.5.17 Permanent Seeding . . . 9 - 69
9.5.18 Hydroseeding/hydro mulching . . . 9 - 71
9.5.19 Slope Tracking . . . 9 - 73
9.5.20 Mulching . . . 9 - 75
9.5.21 Rolled Erosion Control Products . . . 9 - 77
9.5.22 Other Best Management Practices . . . 9 - 83
References . . . 9 - 84

9.1 Purpose And Scope

This chapter provides criteria for measures that should be taken for construction site stormwater discharges to meet the requirements of the Federal Clean Water Act, the Nebraska Environmental Protection Act, and the City of Lincoln ordinances adopted to meet state and federal requirements. Through implementation of the guidelines in this chapter, including development of a Stormwater Pollution Prevention Plan (SWPPP), adverse water quality impacts associated with erosion and sedimentation can be prevented or minimized. Section 9.2 provides an overview of the Fundamentals of the Erosion Process. Requirements for Construction Activity SWPPPs are in Section 9.3. Specific information regarding Mini-SWPPP requirements for Individual Construction Activity are covered in Section 9.3.6. The remainder of the this chapter embodies a range of guidelines, criteria and alternatives for meeting the preparation and implementation requirements of the SWPPP. Section 9.4 covers Best Management Practice (BMP) selection, and Section 9.5 addresses BMP design.

These guidelines in this section were developed by various local, state and federal agencies. The Lower Platte South Natural Resources District (NRD)[1] (1994) *Erosion and Sediment Control and Stormwater Management Manual* and the EPA's *(*2007) *Developing Your Stormwater Pollution Prevention Plan: A Guide for Construction Sites* were key sources of information for these guidelines and can be referenced for more detail on topics such as specifications for particular erosion and sediment control measures and other SWPPP guidelines.

9.2 Fundamentals of the Erosion Process

Soil erosion is the process by which the land's surface is worn away by the action of wind, water, ice and gravity. Natural, or geologic, and is a tremendous factor in creating the earth as we know it today. Except for some cases of shoreline and stream erosion, natural erosion occurs at a very slow and uniform rate and remains a vital factor in maintaining environmental balance. Human activities accelerate the erosion process by loosening and pulverizing soil, making it more susceptible to detachment by natural forces. Accelerated soil erosion is what is most commonly dealt with in the built environment. Accelerated soil erosion is the removal of the surface of the land through the combined action of human activities and the natural processes at a rate greater than would occur because of the natural processes alone

9.2.1 Erosion Types

Water-generated erosion is unquestionably the most severe type of erosion, particularly in developing areas; it is, therefore, the problem to which this chapter is primarily addressed. Soil erosion by water involves the detachment of particles from the soil mass, transportation by surface runoff, and eventual deposition. Soil particles are detached by the impact of rainfall and the shear force of runoff. Transportation of soil particles is primarily by channelized runoff, although raindrop splash causes some net downslope movement and increases the erosive capability of unchannelized overland flow. Runoff occurs when the rainfall intensity is greater than the soil infiltration rate. Once runoff begins, the quantity and size of material transported is a function of runoff velocity and turbulence. Water-generated erosion can be broken down into the following types:

1. **Raindrop erosion** is the first effect of a rainstorm on the soil. Raindrop impact dislodges soil particles and splashes them into the air. These detached particles are then vulnerable to the next type of erosion.

2. **Sheet erosion** is the erosion caused by the shallow flow of water as it runs off the land. These very shallow moving sheets of water are seldom the detaching agent, but the flow transports soil particles which have been detached by raindrop impact and splash. The shallow surface flow rarely moves as a uniform sheet for more than a few feet on land surfaces before concentrating in surface irregularities.

3. **Rill erosion** is the erosion which develops as the shallow surface flow begins to concentrate in the low spots of the irregular contours of the surface. As the flow changes from the shallow sheet flow to deeper flow in

these low areas, the velocity and turbulence of flow increase. The energy of this concentrated flow is able to both detach and transport soil materials. This action begins to cut small channels of its own. Rills are small but well-defined channels which are at most only a few inches in depth. They are easily obliterated by harrowing or other surface treatments.

4. **Gully erosion** occurs as the flow in rills comes together in larger and larger channels. The major difference between gully and rill erosion is a matter of magnitude. Gullies are too large to be repaired with conventional tillage equipment and usually require heavy equipment and special techniques for stabilization.
5. **Channel erosion** occurs as the volume and velocity of flow causes movement of the stream bed and bank materials. Urban development, typified by removing existing vegetation, increasing the amount of impervious areas and paving tributaries, drastically changes the volume and velocity of flow within a stream, destroying the equilibrium of the stream and causing channel erosion to begin. Common points where erosion occurs are at stream bends and at constrictions, such as those where bridges cross a stream. Erosion may also begin at the point where a storm drain or culvert discharges into a stream. Figure 9-1 illustrates the five stages of erosion.

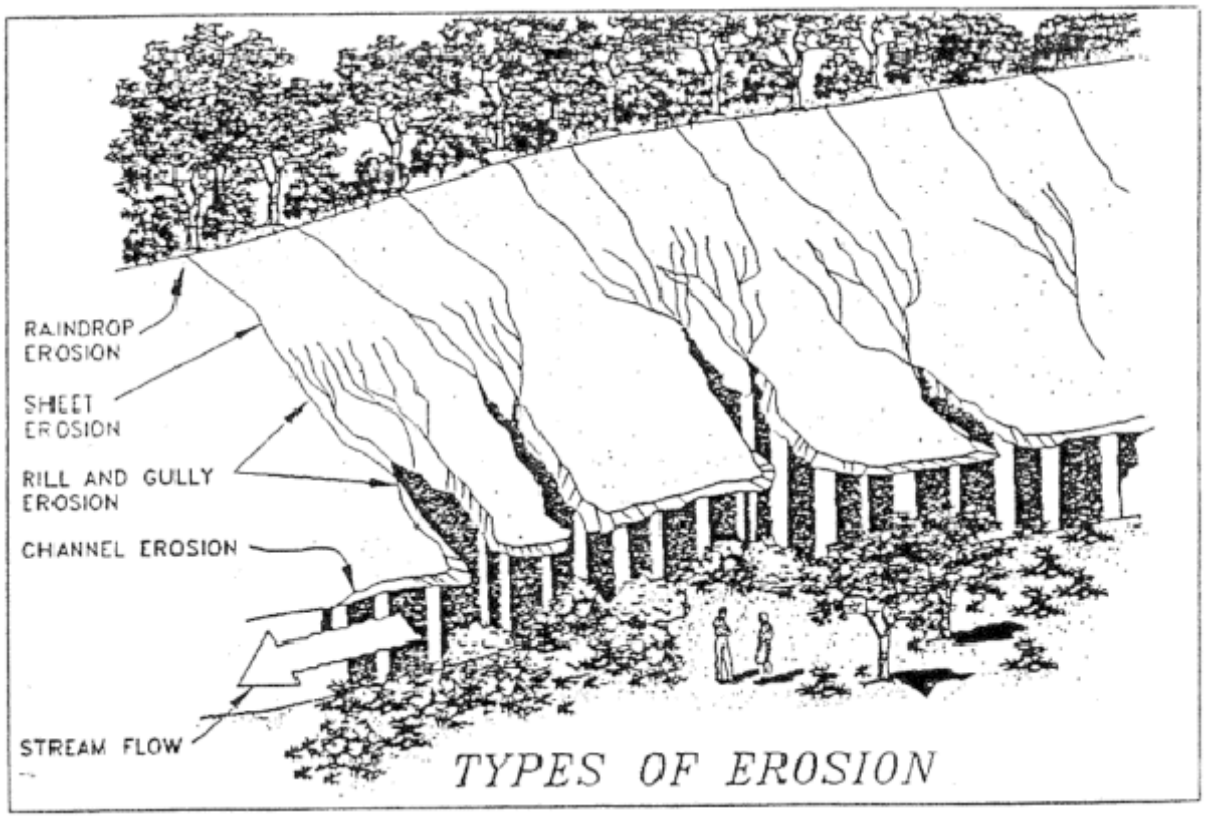

Figure 9-1: Types of Erosion
Source: LPSNRD 1994.

9.2.2 Factors Influencing Soil Erosion

The erosion potential of any area is determined by four interrelated principal factors: the characteristics of its soil, its vegetative cover, its topography and its climate. Each of these factors is discussed separately below.

Soil characteristics which influence the potential for erosion by rainfall and runoff are those properties which affect the infiltration capacity of a soil and the resistance of the soil to detachment and being carried away by falling or flowing water. The following four characteristics are important in determining soil erodibility:

Soil texture (particle size and gradation): Soil texture refers to the sizes and proportions of the particles making up a particular soil. Sand, silt, and clay are the three major classes of soil particles. Soils high in sand content are said to be coarse-textured. Because water readily infiltrates into sandy soils, the runoff, and consequently the erosion potential, is relatively low. Soils with a high content of silts and clays are said to be fine-textured or heavy. Clay, because of its stickiness, binds soil particles together and makes a soil resistant to erosion. However, once the fine particles are eroded by heavy rain or fast flowing water, they will travel great distances before settling. Even with the sediment control measures described in this manual, it is extremely difficult to remove clay particles from flowing water. Typically, particles of clay and fine silt will settle in a large, calm water body, such as a bay, lake, or reservoir, at the bottom of a watershed. Thus, silty and clayey soils are frequently the worst water polluters. Soils that are high in silt and fine sand and low in clay and organic matter are generally the most erodible. Well-drained sandy and rocky soils are the least erodible.

Percentage of organic matter: Organic matter consists of plant and animal litter in various stages of decomposition. Organic matter improves soil structure and increases permeability, water-holding capacity, and soil fertility. Organic matter in an undisturbed soil or in a mulch covering a disturbed site reduces runoff and, consequently, erosion potential. Mulch on the surface also reduces the erosive impact of raindrops.

Soil structure: Soil structure is the arrangement of soil particles into aggregates. A granular structure is the most desirable one. Soil structure affects the soil's ability to absorb water. When the soil surface is compacted or crusted, water tends to run off rather than infiltrate. Erosion hazard increases with increased runoff. Loose, granular soils absorb and retain water, which reduces runoff and encourages plant growth.

Soil permeability: Soil permeability refers to the ability of the soil to allow air and water to move through the soil.
Soil texture and structure and organic matter all contribute to permeability. Soils with high permeability produce less runoff at a lower rate than soils with low permeability, which minimizes erosion potential. The higher water content of a permeable soil is favorable for plant growth, although it may reduce slope stability in some situations.

Vegetative cover plays an extremely important role in controlling erosion, providing the following benefits:

1. Shielding the soil surface from raindrop impact
2. Providing root systems that hold soil particles in place
3. Maintaining the soil's capacity to absorb water
4. Slowing the velocity of runoff
5. Removing subsurface water between rainfalls through the process of evapotranspiration

By limiting and staging the removal of existing vegetation and by decreasing the area and duration of exposure, soil erosion and sedimentation can be significantly reduced during construction. Special consideration should be given to the maintenance of existing vegetative cover on areas of high erosion potential such as moderately to highly erodible soils, steep slopes, drainageways, and the banks of streams.

Topography, including the size, shape, and slope characteristics of a watershed, influences the amount and rate of runoff. As both slope length and gradient increase, the rate of runoff increases and the potential for erosion is magnified. The shape of a slope also has a major bearing on erosion potential. The base of a slope is more susceptible to erosion than the top because runoff has more momentum and is more concentrated as it approaches the base. Slope orientation can also be a factor in determining erosion potential. For example, a slope that faces south and contains droughty soils may have such poor growing conditions that vegetative cover can be difficult to re-establish. Conversely, northern exposures tend to be cooler and more moist, but they also receive less sun, which

results in slower plant growth. Climate characteristics, such as precipitation patterns and temperature, influence runoff and susceptibility of soils to erosion. The frequency, intensity, and duration of rainfall are fundamental factors in determining the amounts of runoff produced in a given area. As both the volume and velocity of runoff increase, the capacity of runoff to detach and transport soil particles also increases. Where storms are frequent, intense, or of long duration, erosion risks are high. Seasonal changes in temperature, as well as variations in rainfall, help to define the high erosion risk period of the year. When precipitation falls as snow, no erosion will take place. However, when the temperature rises, melting snow adds to runoff, increasing erosion hazards. When the ground is still partially frozen, its absorptive capacity is reduced. Frozen soils are relatively erosion resistant; however, soils with high moisture content are subject to uplift action and are usually very easily eroded upon thawing

9.3 SWPPP Requirements for Construction Activity

Construction activity is the disturbance of one (1) acre or more of land area, more particularly defined in Section 28.01.030 of the Regulations for Construction Site Discharges. Prior to land disturbance associated with Construction Activity, a permit application must be submitted in the form of a Notice of Intent (NOI) to the Lower Platte South Natural Resources District (NRD) on behalf of the City. For sites greater than five (5) acres, the forms are also required by the state to be submitted to the Nebraska Department of Environmental Quality for approval. The NOI must include a Construction Activity Stormwater Pollution Prevention Plan (SWPPP) with the information identified in Section 28.01.060 of the Lincoln Municipal Code and the Drainage Criteria Manual. The SWPPP must identify the appropriate Best Management Practices (BMPs) to be implemented to control erosion, sedimentation, and pollutants, as described in Sections 9.4, 9.5, 9.3.6, 9.3.7 and 9.3.8. The process, from permit submittal to Notice of Termination, is shown in Figure 9-2.

The Construction Activity SWPPP must be prepared and signed by a qualified individual such as a Professional Engineer, Landscape Architect, and/or Certified Professional in Erosion and Sediment Control (CPESC). If review comments are not received by the permittee within 7 calendar days after receipt of application by the LPSNRD, the application must be deemed authorized. Prior to actual initiation of the land disturbing activity, the applicant must submit to the LPSNRD a Notice of Start of construction. Once the construction is complete in accordance with the design standards, the applicant must submit to the LPSNRD a Notice of Termination.

In preparing the Construction Activity SWPPP, individuals should review this section and those that follow. Specifically, those preparing plans should be familiar SWPPP requirements (Section 9.3), as well as the selection and design of BMPs (Sections 9.4-9.5) and the fundamentals of the erosion process (Section 9.6).

9.3.1 Summary of Required SWPPP Items for Construction Activity

The following is a summary of required SWPPP items for Construction Activity to be prepared in accordance with sections 9.3-9.6 of this chapter.

Narrative

1. Project Description - Briefly describes the nature and purpose of the land-disturbing activity, and the area (acres) to be disturbed.

2. Existing site conditions - A description of the existing topography, vegetation and drainage.

3. Adjacent areas - A description of neighboring areas such as streams, lakes, residential areas, roads, etc., which might be affected by the land disturbance.

4. Off-site areas - Describe any off-site land disturbing activities that will occur (including borrow sites, waste or surplus areas, etc.). Will any other areas be disturbed?

5. Soils - A brief description of the soils on the site giving such information as soil name, erodibility,

permeability, depth, texture and soil structure.

6. Critical areas - A description of areas on the site which have potentially serious erosion problems (steep slopes, channels, etc.).

7. Erosion and sediment control measures - A description of the methods which will be used to control erosion and sedimentation on the site. (Controls must meet the minimum specified requirements as found in Section 9.6 of this manual).

8. Permanent Stabilization - A brief description, including specifications, of how the site will be stabilized after construction is completed.

9. Stormwater runoff and management - Will the developed site cause an increase in peak runoff rates? Will the increase in runoff cause flooding or channel degradation downstream? Describe the strategy to control stormwater runoff.

10. Spill prevention & response plan - When developing a spill prevention plan, include, at a minimum, the following:
    - Note the locations of chemical storage areas, storm drains, tributary drainage areas, surface water bodies on or near the site, and measures to stop spills from leaving the site.
    - Specify how to notify the appropriate authorities to request assistance.
    - Describe the procedures for immediate cleanup for spills and proper disposal.
    - Identify personnel responsible for implementing the plan in the event of a spill.

Site Plan

1. Vicinity map - A small map locating the site in relation to the surrounding area. Include any landmarks which might assist in locating the site.

2. Indicate north - The direction of north in relation to the site.

3. Limits of clearing and grading - Areas which are to be cleared and graded.

4. Existing contours - The existing contours of the site.

5. Final contours - Changes to the existing contours, including final drainage patterns.

6. Existing vegetation - The existing tree lines, grassed areas, or unique vegetation.

7. Soils - The boundaries of different soil types.

8. Existing drainage patterns - The dividing lines and the direction of flow for the different drainage areas. Include the size (acreage) of each drainage area.

9. Critical erosion areas - Areas with potentially serious erosion problems.

10. Site development - Show all improvements such as buildings, parking lots, access roads, utility roads, etc.

11. Location of practices - The locations of erosion and sediment controls and stormwater management practices used on the site. Use the standard symbols and abbreviations as noted in Sections 5 and 6 of this manual.

12. Off-site areas - Identify any off-site land disturbing activities (borrow sites, waste sites, etc.). Show location of erosion controls. (Is there sufficient information to assure adequate protection and stabilization?)

Details

Erosion And Sediment Control

1. Detailed drawings - Enlarged, dimensioned drawings of such key features as sediment basin risers, energy dissipators, and waterway cross-sections.

2. Detailed specifications - Specifications for specific items such as seeding mix and planting schedule, filter fabric size, rock gradations, etc.

3. Construction sequencing - Specifications for the sequence of construction operations describing the relationship between the implementation and maintenance of sediment controls, including permanent and temporary stabilization and the various stages or phases of earth disturbance and construction.

4. Maintenance program - A description of inspection schedules, spare materials needed, stockpile locations, instructions for sediment removal and disposal, and for repair of damaged structures should be provided. A clear statement defining maintenance responsibility should also be included.

Calculations

1. Calculations and assumptions - Provide data for design storm used to size pipes, channels, sediment basins and traps. Include calculations for pre- and post-development runoff as well as any other calculations necessary to support drainage, erosion and sediment, and stormwater management systems.

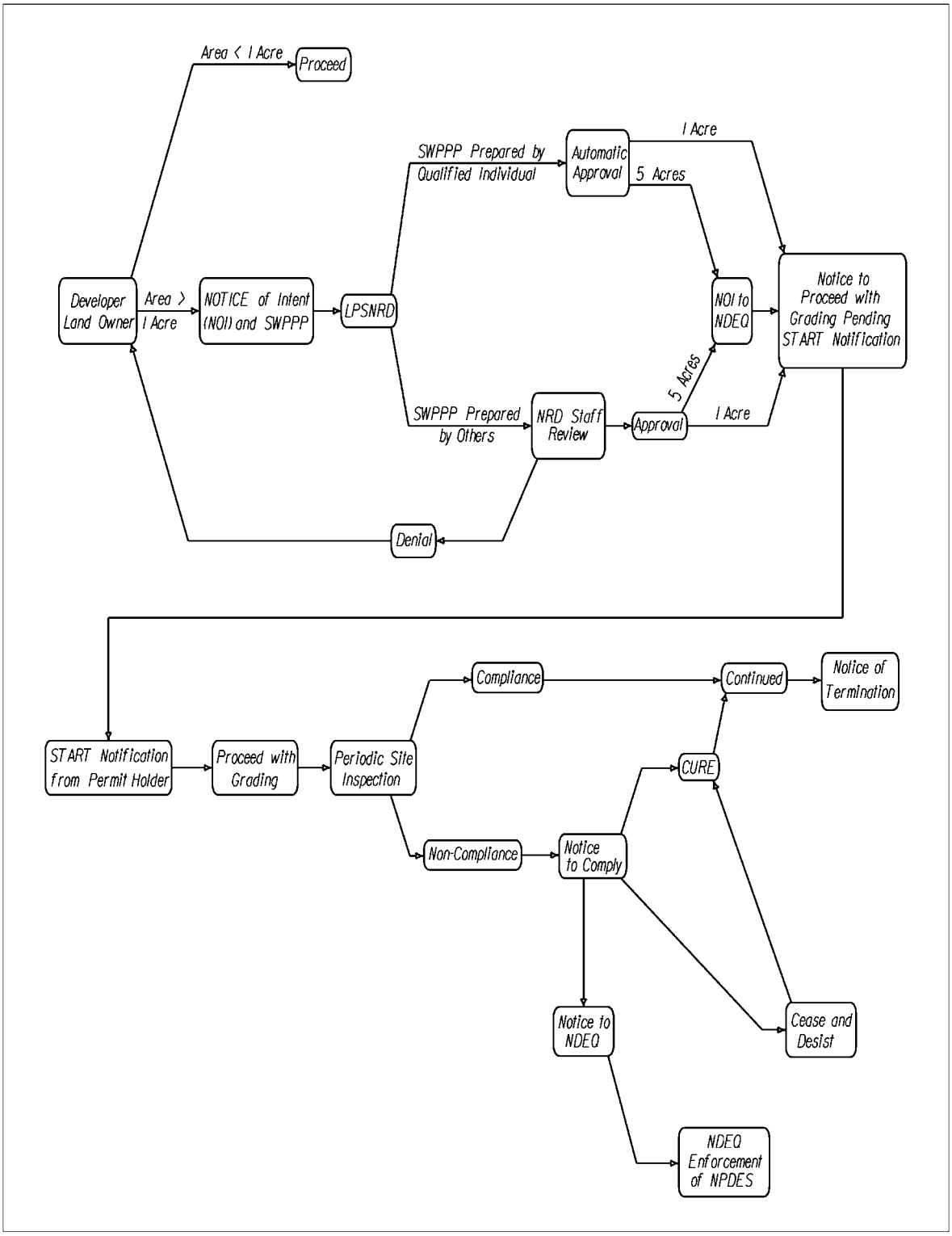

Figure 9-2: NPDES Permit Process Flowchart

9.3.2 General Information for Construction Activity SWPPPs

A SWPPP is more than just a sediment & erosion control plan. It is a comprehensive, written document that describes the pollution prevention practices and activities that will be used during each phase of construction. It includes descriptions of the site and of each major phase of the planned activity, the roles and responsibilities of contractors, and the inspection schedules and logs. It is also a place to document changes and modifications to the construction plans and associate stormwater pollution prevention activities.

1. The SWPPP must be implemented either prior to or concurrent with the initiation of construction activity. SWPPP activities must be maintained throughout the period construction activities are ongoing until final site stabilization is achieved. A current and updated copy of the SWPPP must be available on-site at all times that work is being performed. Persons and/or subcontractors responsible for carrying out duties pursuant to the SWPPP must be properly trained and informed of their responsibilities.

2. The SWPPP shall be dynamic. If deficiencies in the plan arise during the course of the project, or differing site conditions warrant, the applicant must implement effective corrective actions that may require modification of the SWPPP.

3. The City/NRD may require modification of the SWPPP:

   - If it is not effective in minimizing erosion or the release of storm water pollutants from the site;
   - If more effective procedures are available and practical;
   - If previous experience has shown the control methods specified have proven to be inadequate in similar circumstances; or
   - To meet basin specific water quality requirements or goals.
   - To correspond to changes in the development plan for the site.
   - In the event of repetitive failure to adequately maintain practices.

9.3.3 General Requirements for Construction Activity SWPPPs

The SWPPP lays out the steps and techniques required to reduce pollutants in stormwater runoff leaving the construction site. Therefore, proper development and implementation of the SWPPP is a crucial aspect of permit compliance. First and foremost, the SWPPP must be developed and implemented consistent with the requirements of the NPDES Construction General Permit, and City standards and ordinances regarding erosion and sediment control administered by the Lincoln Public Works and Utilities Department in partnership with the Lower Platte South Natural Resources District.

1. The SWPPP is to identify all pollution sources that could come into contact with stormwater leaving the site. It describes the BMP's utilized to reduce pollutants in the construction site's stormwater discharges, and it includes written records of the site inspections and the follow-up maintenance that is performed.

2. At a minimum the following must be provided in the SWPPP:
   - pollutant sources
   - Description of contents Cover/title page
   - Project/SWPPP contact information
   - Site and activity description, including a site map
   - Pre and post-development runoff coefficients
   - Identification of potential controls to reduce pollutants
   - Spill prevention & response plan
   - Maintenance/inspection procedures
   - records of inspections and follow-up maintenance of BMP's
   - SWPPP amendments
   - SWPPP Certification

3. The Construction Activity SWPPP must be prepared and signed by a qualified individual such as a Professional Engineer, Landscape Architect, and/or Certified Professional in Erosion and Sediment Control (CPESC). If review comments are not received by the permittee within seven (7) calendar days after receipt of application by the LPSNRD, the application must be deemed authorized. If the SWPPP has been denied, it may be revised and resubmitted for approval. Prior to actual initiation of the land disturbing activity, the applicant must submit to the NRD a Notice of Start of construction. Once the construction is complete in accordance with the design standards, the applicant must submit to the NRD a Notice of Termination.

4. The SWPPP must include placement of the following statement. "The undersigned certifies this plan has been designed in accordance with the terms of the interlocal agreement for NPDES compliance."

9.3.4 Common SWPPP Objectives

For a SWPPP to be effective, it must be developed in the project planning stage and effectively applied during construction. In most cases, the most practical method of controlling erosion and the associated production and transport of sediment includes a combination of limited time of soil exposure and judicious selection of erosion control practices and sediment trapping facilities. The SWPPP should be prepared to meet the following objectives:

1. Minimize the extent and the duration of soil exposure. The duration of soil exposure can be minimized through construction phasing, prompt revegetation and mulching. Grading should be completed as soon as possible and followed by permanent revegetation. As cut slopes are made and as fill slopes are brought up to grade, these areas should be revegetated. Minimizing grading of large or critical areas during the seasons of maximum erosion potential (April through September) reduces the risk of erosion.

2. Apply erosion control practices to prevent excessive sediment production. Keep soil covered to the extent practicable with temporary or permanent vegetation or mulch. Special grading methods such as roughening a slope on the contour or tracking with a cleated dozer may be used. Other practices include diversion structures to divert surface runoff from exposed soils and grade stabilization structures to control surface water. "Gross" erosion in the form of gullies must be prevented by these water control devices.

3. Apply perimeter sediment control practices to protect the disturbed area from off-site runoff and to prevent sedimentation damage to areas below the construction site. This principle relates to using practices that effectively isolate the construction site from surrounding properties, and especially to controlling sediment once it is produced and preventing its transport from the site. Generally, sediment can be retained by two methods: (a) filtering runoff as it flows through an area and (b) impounding the sediment-laden runoff for a period of time so that the soil particles settle out. Diversions, dikes, sediment traps, vegetative and structural sediment control measures can be used to control sediment. These measures may be temporary or permanent, depending on whether they will remain in use after construction is complete. The best way to control sediment, however, is to prevent erosion.

4. Keep runoff velocities low and retain runoff on the site. The removal of existing vegetative cover and the resulting increase in impermeable surface area during construction will increase both the volume and velocity of runoff. These increases must be taken into account when providing for erosion control. Keeping slope lengths short and gradients low, and preserving natural vegetative cover can keep stormwater velocities low and limit erosion hazards. Runoff from the development should be safely conveyed to a stable outlet using storm drains, diversions, stable waterways or similar measures. Conveyance systems should be designed to withstand the velocities of projected peak discharges. These facilities should be operational as soon as possible.

5. Stabilize disturbed areas immediately after final grade has been attained. Permanent structures, temporary or permanent vegetation, mulch, stabilizing emulsions, or a combination of these measures should be employed as quickly as possible after the land is disturbed. Temporary vegetation and mulches and other control materials can be most effective when it is not practical to establish permanent vegetation or until permanent vegetation is established. Such temporary measures should be employed immediately after rough grading is completed if a delay is anticipated in obtaining finished grade. The finished slope of a cut or fill should designed to be stable and easily maintained. Stabilize roadways, parking areas and paved areas with a gravel sub-base whenever possible.

6. Implement a thorough maintenance and follow-up program. This last principle is vital to the success of the six other principles. A site cannot be effectively controlled without thorough, periodic checks of the erosion and sediment control practices. These practices must be maintained just as construction equipment must be maintained and material checked and inventoried. An example of applying this principle would be to start a routine "end of day check" to make sure that all control practices are working properly.

9.3.5 SWPPP Development - Site Assessment and Planning

The following section describes five critical steps in the SWPPP development process that will help provide a good foundation for the SWPPP.

1. Assess the site and proposed project. The SWPPP should describe the undeveloped site and identify features of the land that can be incorporated into the final plan and natural resources that should be protected.

    a. Visit the site: The people responsible for site design drafting the SWPPP should conduct a thorough walk-through of the entire construction site to assess site-specific conditions such as soil types, drainage patterns, existing vegetation, and topography. Avoid copying SWPPPs from other projects to save time and money. Each construction site is unique, and visiting the site is the only way to create a SWPPP that addresses the unique conditions at that site.
    b. Assess Existing Construction Site Conditions: Assess the existing conditions at the construction site, including topography, drainage and soil type. This assessment is the foundation for building the SWPPP and for developing the final site plan. In this assessment, use or create a topographic drawing that:
        - Indicates how stormwater currently drains from the site, and identify the location of discharge points or areas
        - Identifies slopes and slope lengths. The topographic features of the site are a major factor affecting erosion from the site
        - Identifies soil type(s) and any highly erodible soils and the soil's infiltration capacity
        - Identifies any past soil contamination at the site
        - Identifies natural features, including trees, streams, wetlands, slopes and other features to be protected

        In most cases, the site designer can compile all this information on a digitized drawing that can then be adapted to show the planned construction activity, the phases of construction, and the final site plan.
    c. Identify Receiving Waters, Storm Drains, and Other Stormwater Conveyance Systems: The SWPPP should clearly identify the receiving waters and stormwater systems through which stormwater from the site could flow. If the site's stormwater flows into a municipal drain system, the plan designer will need to determine the ultimate destination of that system's discharge. If the site's stormwater runs off to areas not connected to the storm drain system, the designer should consider the land's topography and then identify the waterbodies that it could reach.
    d. Describe The Construction Project: The SWPPP should contain a brief description of the construction activity, including:
        - Project type or function (i.e. low-density residential, industrial center, street widening)
        - Project location, including latitude and longitude, and section-township-range
        - Estimated project start and end dates
        - Sequence and timing of activities that will disturb soils at the site
        - Size of the project
        - Estimated total area expected to be disturbed by excavation, grading, or other construction activities, including dedicated off-site borrow and fill areas
        - Runoff Coefficient before and after construction
        - Soil types
        - Describe and identify the location of other potential sources of stormwater contamination, such as asphalt and concrete plants, paint and concrete washout areas, etc.

    e. Identify Pollutants and Pollution Sources: Identify the pollutants and sources that are likely to be found on the site. Sediment is the main pollution of concern, but other pollutants may be found, usually in substantially smaller amounts, in stormwater runoff from construction sites. These can include nutrients,

heavy metals, organic compounds, pesticides, oil and grease, bacteria and viruses, trash and debris, and other chemicals. After identifying the pollutants and sources, be as specific as possible in the SWPPP about the BMPs that will use to address them.

2. Identify Approaches to Protect Natural Resources. The SWPPP should describe methods to be utilized to protect and preserve any streams, wetlands, ponds, or other waterbodies that are on the property or immediately adjoining it. Riparian areas around headwater streams are especially important to the overall health of the entire river system. Contact the Nebraska Department of Environmental Quality to determine if any impaired waters designation has been placed on any adjacent streams, rivers, or waterbodies. A permittee might be subject to additional requirements to protect these waterbodies.

   Wetland areas, including bogs marshes and sloughs, maybe found in areas adjacent to rivers, streams and lakes, but may also be found in isolated places far from other surface waters. Many types of wetlands, especially saline wetlands, are protected under the Clean Water Act and construction activities in and around these areas may require an additional permit from the U.S. Army Corps of Engineers. Construction site operators should make every effort to preserve wetlands and must follow local, state, and federal requirements before disturbing them or the areas around them.

3. Assess Whether There Are Endangered Plant or Animal Species in the Area. The Federal Endangered Species Act protects endangered and threatened species and their critical habitat areas. In developing the assessment of the site, determine whether listed endangered species are on or near the property. Critical habitat areas are often designated to support the continued existence of listed species. The SWPPP designer will also need to determine whether critical habitat areas have been designated in the vicinity of the project. Contact local offices of the U.S. Fish and Wildlife Service (FWS), or the Nebraska Game and Parks Service. For more information and to locate lists for the State of Nebraska, visit *www.epa.gov/npdes/endangeredspecies*

4. Assess Whether There Are Historic Sites that Require Protection. The National Historic Preservation Act applies to construction activities. As with endangered species, some permits may specifically require the SWPPP designer to assess the potential impact of the stormwater discharges on historic properties. However, whether or not this is listed as a condition for permit coverage, the National Historic Preservation Act and any applicable State laws apply to the project. Contact the State Historic Preservation Officer for the Nebraska State Historical Society at 402-471-3100 for more information.

5. Develop Site Maps. The final step in the site evaluation process is to document the results of the site assessment and the planned phases of construction activity on a detailed site map or maps. This includes developing site maps showing planned construction activities and stormwater practices for the various major stages of construction, protected areas, natural features, slopes, erodible soils, nearby water bodies, permanent stormwater controls, and so on. The permittee must keep the SWPPP and the site maps up-to-date to reflect changes at the site during the construction process.

   a. Location Maps: A general location map is required on the SWPPP, and is helpful to identify nearby, but not adjacent water bodies in proximity to other properties.

   b. Site Maps: The detailed construction site maps should show the entire site and identify a number of features at the site related to construction activities and stormwater management practices. Site maps should show the construction activities and stormwater management practices for each major phase of construction (i.e. initial grading, infrastructure, construction, and stabilization). The site maps should legibly identify the following features:
      - Stormwater flow and discharges. Indicate flow direction(s) and approximate slopes after grading activities, as well as locations of discharges to surface waters or municipal storm drain systems.
      - Areas and features to be protected. Include wetlands, nearby streams, coastal waters, mature trees and natural vegetation, steep slopes, highly erodible soils, etc.
      - Disturbed areas. Indicate locations and timing of soil disturbing activities (i.e. grading). Mark clearing limits
      - BMPs. Identify locations of structural and non-structural BMPs identified in the SWPPP, as well as post-construction stormwater BMPs. Erosion & sediment control BMPs are described in section 9.5

of this chapter.

- Areas of stabilization. Identify locations where stabilization practices are expected to occur. Ark areas where final stabilization has been accomplished.
- Other areas and roads. Indicate locations of material, waste, borrow, or equipment.

c. Develop and keep up-to-date site maps showing non-structural BMPs that change frequently in location as the work on a construction site progresses. The permit requires that the permittee keep the SWPPP up-to-date, so mark up the site map with the current location of these BMPs. Indicate the current location of the following:
   - Portable toilets
   - Material storage areas
   - Vehicle and equipment fueling and maintenance areas
   - Concrete washouts
   - Paint washouts
   - Dumpsters or other trash and debris containers
   - Spill kits
   - Stockpiles
   - Any other non-structural non-stormwater management BMPs
   - Any temporarily removed structural BMPs
   - Any changes to the structural BMPs

d. If a marked-up site map is too full to be easily read, the SWPPP designer should date and fold it, put it in the SWPPP for documentation, and start a new one. That way, there is a good hard copy record of what has occurred on-site.

9.3.6 SWPPP Requirements for Individual Site Construction

Individual Site Construction is the disturbance of less than one acre of total land area that is part of a larger common plan of development or redevelopment or sale associated with Construction Activity, more particularly defined in Section 28.01.030 of the Regulations for Construction Site Discharges. Prior to land disturbance associated with individual site construction, a Mini-SWPPP for Individual Site Construction must be submitted to the permittee of the construction activity, and to the Director of Building and Safety to be filed with the building permit. The Mini-SWPPP for Individual Site Construction must include the information identified in Section 28.01.070 of the Lincoln Municipal Code and be retained with the approved construction document. The permit requirements are as follows:

1. A complete site plan and specifications, signed by the person who designed the plan, must be drawn to a legible scale, clearly labeled with a north arrow and date of preparation. Figure 9-3 is an example of a Mini-SWPPP for Individual Site Construction. It must include, at a minimum, the following information:
   - Stormwater flow path directions indicated by the use of arrows
   - Location and description of all proposed BMPs used during the construction period
   - A statement indicating that all BMPs are in place and in working order prior to any land disturbance
   - The permit number for the Construction Activity SWPPP, as well as the most current subdivision Addition number, Block number, and Lot number, based on the Final Plat of the permitted site.
2. The Mini-SWPPP for Individual Site Construction must be retained with the approved construction document and must include a site plan for proposed conditions.

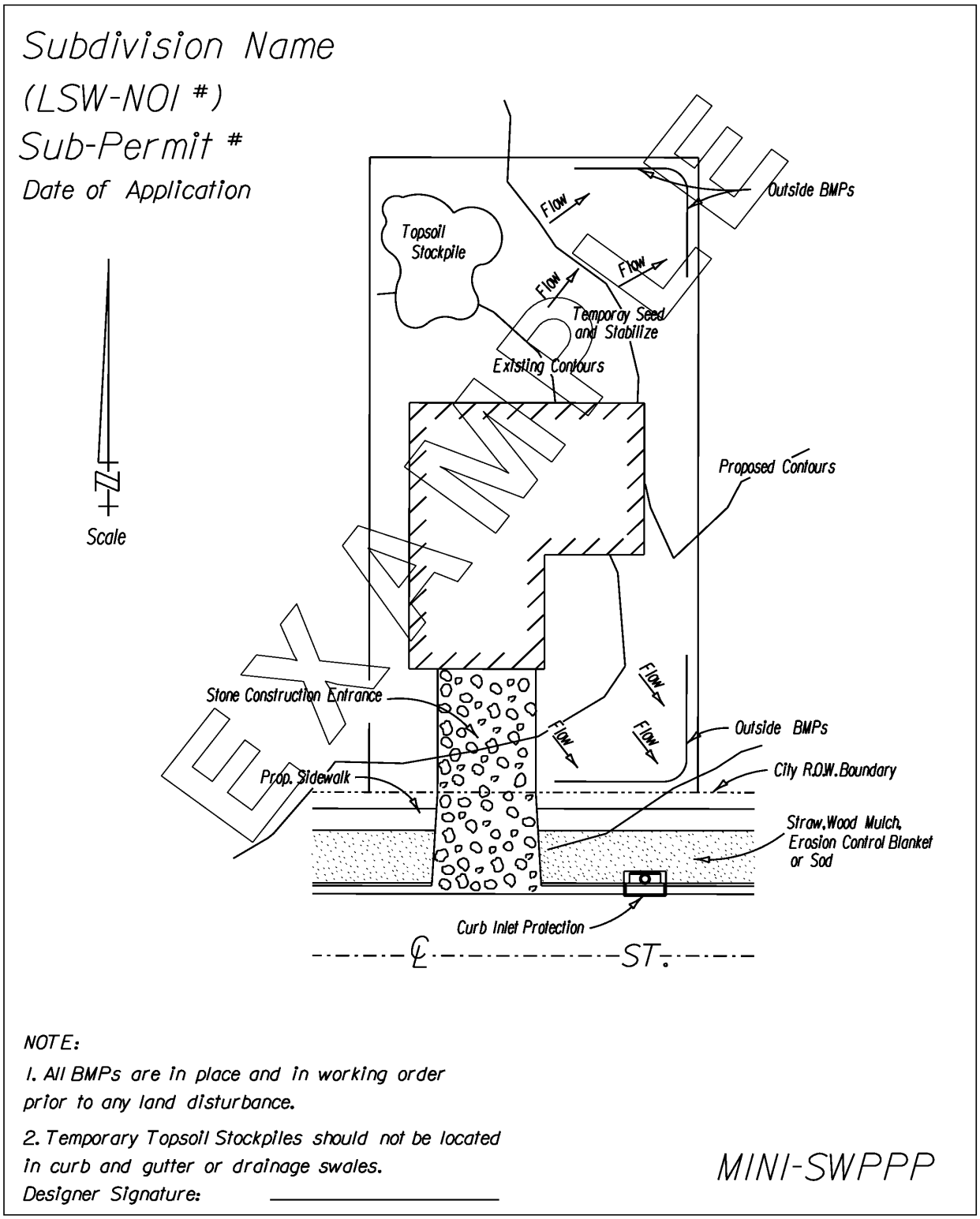

Figure 9-3: Mini-SWPPP for Individual Construction Activity

9.3.7 SWPPP Erosion And Sediment Control Requirements

1. The applicant must incorporate erosion and sediment control practices into the SWPPP and implement said practices at all locations undergoing construction activity. The erosion and sediment control practices utilized must consider site specific variables including slope, soil types, the size of the project, the duration of construction activities, the proximity of perennial and seasonal streams, and the existence of impounded waters downstream of the project. The controls utilized may vary from site-to-site, but the controls used must be effective in minimizing erosion and sediment release from the site, and in protecting the water quality in the receiving stream or water body.

2. The existence of downstream lakes or other impounded water increases water quality concerns relative to sediment release. In these instances, more stringent erosion and sediment controls may need to be implemented.

3. The applicant must upgrade the erosion and sediment control practices utilized in the SWPPP and implement additional controls, if existing controls prove inadequate in minimizing erosion and sediment releases, or in protecting the water quality of the receiving stream or water body. The applicant must comply with City/NRD requests to implement additional controls to minimize erosion and sediment releases, and to protect receiving water bodies.

4. Physical erosion and sediment control practices incorporated into the SWPPP must comply with the requirements of the Nebraska Department of Environmental Quality.

5. All SWPPPs submitted for approval must include the following statement, "Unless otherwise indicated, all vegetative and structural erosion and sediment control practices and stormwater management practices will be constructed and maintained according to the minimum standards and specifications of the City of Lincoln Drainage Criteria Manual.

6. All of the following principles must be considered for inclusion in the SWPPP.

   a. Minimize disturbed area and protect natural features and soil. By carefully delineating and controlling the area that will be disturbed by grading or construction activities, the SWPPP designer can greatly reduce the potential for soil erosion and stormwater pollution problems. Limit disturbed areas to only those necessary for the construction of the project. Natural vegetation is the best and cheapest erosion control BMP. When possible, vegetative strips must be maintained on the down gradient perimeter of sites, and adjacent to waterways and drainage ways that are within the site. Temporary or permanent seeding must be established as soon as possible after grading and clearing activities are completed, and during interim periods on areas that are not being actively worked.

   b Phase construction activity. By scheduling or sequencing the construction work and concentrating it in certain areas, the SWPPP designer can minimize the amount of soil that is exposed to the elements at any given time. Limiting the area of disturbance to places where construction activities are underway and stabilizing them as quickly as possible can be one of the most effective BMPs.

   c. Control stormwater flowing onto and through the project. Plan for any potential stormwater flows coming onto the project area from upstream locations, and divert (and slow) flows to prevent erosion. Likewise, the volume and velocity of onsite stormwater runoff should be controlled to minimize erosion. Stabilization measures must be applied to earthen structures such as dams, dikes and diversions immediately after installation.
      An example of a BMP for controlling run-on would be:
      - Diversion Dikes or berms

   d. Stabilize soils properly. Where construction activities have temporarily or permanently ceased, the area must be temporarily or permanently stabilized within seven (7) calendar days.

      All SWPPP plans submitted for approval must include placement of the following statement, "following

soil disturbance, permanent or temporary stabilization must be completed within seven (7) calendar days to the surface of all perimeter sediment controls, topsoil stockpiles, and any other disturbed or graded areas on the project site which are not being used for material storage, or on which actual earth moving activities are not being performed." In subdivisions, this permanent or temporary stabilization must be maintained until development commences on street work, utility work on individual lots within the subdivision.

Temporary measures are necessary when an area of a site is disturbed but where activities in that area are not completed or until permanent BMPs are established. Topsoil stockpiles should also be protected to minimize any erosion from these areas. Silt fence and other sediment control measures are NOT stabilization measures.

Temporary cover BMPs include:

- seeding
- mulches
- bonded fiber matrices (hydroseeding/mulching)
- blankets and mats
- the use of soil binders

Permanent-cover BMPs include:

- permanent seeding and planting
- sodding
- channel stabilization
- vegetative buffer strips

e. Protect slopes. Protect all slopes with appropriate erosion controls. Steeper slopes, slopes with highly erodible soils, or long slopes require a more complex combination of controls. Cut and fill slopes must be designed and constructed in a manner that will minimize erosion. Slopes that are found to be eroding excessively within one year of permanent stabilization must be provided with additional slope stabilization measures until the problem is corrected.

Examples of BMPs for slope stabilization include:

- erosion control blankets
- turf reinforcement mats
- bonded fiber matrices (hydroseeding/mulching)

Silt fence, straw wattles, or compost socks may also be used to help control erosion on moderate to shallow slopes and should be installed on level contours spaced at 10 to 20-foot intervals. The SWPPP designer can also use diversion dikes and berms to keep stormwater off slopes. Concentrated runoff must not flow down cut or fill slopes unless contained within an adequate temporary or permanent channel, flume or slope drain structure.

f. Protect storm drain inlets. Protect all inlets that could receive stormwater from the project until final stabilization of the site has been achieved. Install inlet protection before soil-disturbing activities begin, if possible. Maintenance throughout the construction process is important. Storm drain inlet protection should be used not only for storm drains within the active construction project, but also for storm drains outside the project area that might receive stormwater discharges from the project. If there are storm drains on private property that could receive stormwater runoff from the project, coordinate with the owners of that property to ensure proper inlet protection.

g. Establish perimeter controls. Maintain natural areas and supplement them with perimeter sediment controls to help stop sediment from leaving the site. Install controls on the downslope perimeter of the project (it is most often not necessary to surround the entire site with silt fence). Sediment barriers can be used to protect stream buffers, riparian areas, wetlands, adjacent public right-of-way, and neighboring private properties. They are effective only in small areas and should not be used in areas of concentrated flow. Sediment basins and traps, perimeter dikes, sediment barriers and other measures intended to trap sediment must be constructed as a first step in any land disturbing activity and must be made functional before upslope land disturbance takes place.

h. Retain sediment on-site and control dewatering practices. When sediment retention is from a larger area is required, consider using a sediment trap or basin. These practices detain sediment-laden runoff for a period of time, allowing sediment to settle before runoff is discharged. Proper design and maintenance are essential to ensure that these practices are effective.

Where a large sediment basin is not practical, use smaller sediment basins and traps(or both) where feasible. At a minimum, use silt fences, vegetative buffer strips, or equivalent sediment controls for all down-gradient boundaries (and for those side-slope boundaries deemed appropriate for individual site conditions).

Dewatering practices as used to remove groundwater or accumulated rain water from excavated areas.

Pump muddy water from these areas to a temporary or permanent sedimentation basin or to an area completely enclosed by silt fence or other sediment retention device in a flat vegetated area where discharges can infiltrate into the ground. Never discharge muddy water into storm drains, streams, lakes or wetlands unless sediment has been removed before discharge.

i. Establish stabilized construction exits. Vehicles entering or leaving the site have the potential to track significant amounts of sediment onto streets. Identify and clearly mark one or two locations where vehicles will enter and exit the site and focus stabilizing measures at those locations.
Construction exits are commonly made with crushed rock. They can be further be stabilized using stone pads or concrete. No system is perfect, so sweeping/vacuuming the street regularly completes this BMP.

j. Stabilize channels and watercourses. When work in a live watercourse is performed, precautions must be taken to minimize encroachment, control sediment transport and stabilize the work area to the greatest extent possible during construction. Nonerodible material shall be used for the construction of causeways and cofferdams. Earthen fill may be used for these structures if armored by nonerodible cover materials.

When live watercourse must be crossed by construction vehicles more than twice in any six month period, a temporary stream crossing constructed of nonerodible material must be provided.
The bed and banks of a watercourse must be stabilized immediately after work in the watercourse is completed.

9.3.8 Good Housekeeping BMPs

Construction projects generate large amounts of building-related waste, which can end up polluting stormwater runoff if not properly managed. The suite of BMPs that are described in the SWPPP must include pollution prevention practices that are designed to prevent contamination of stormwater from a wide range of materials and wastes at the site. The five (5) principles described in this section are designed to help the SWPPP designer identify the pollution prevention practices that should be described in the SWPPP and implement at the site.

1. Provide for waste management.
   a. Design proper management procedures and practices to prevent or reduce the discharge of pollutants to stormwater from solid or liquid wastes that will be generated at the site. Practices such as trash disposal, recycling, proper material handling, and cleanup measures can reduce the potential for stormwater runoff to pick up construction site wastes and discharge them to surface waters.
   b. Provide well-maintained and properly located toilet facilities. Provide for regular inspections, service, and disposal. Locate portable toilet facilities at least 20 feet away from storm drain inlets, and at least 10 feet back from the edge of curb and gutter conveyance systems.

2. Establish proper building material handling and staging areas.
   a. The SWPPP must include comprehensive handling and management procedures for building materials, especially those that are hazardous and toxic. Paints, solvents, pesticides, fuels and oils, other hazardous materials or any building materials that have the potential to contaminate stormwater should be stored indoors or under cover whenever possible, or in areas with secondary containment. Secondary containment prevents a spill from spreading across the site and include dikes, berms, curbing, or other containment methods. Secondary containment systems should also ensure protection of groundwater.
   b. Designate staging areas for activities such as fueling vehicles, mixing paints, plaster, mortar, etc. Designated staging areas will help monitor the use of materials and to clean up any spills. Training employees and subcontractors is essential to the success of this pollution prevention principle.

3. Designate washout areas.
   a. All concrete contractors and any subcontractors installing concrete must be required to use designated and marked concrete washout areas on the permitted construction site. Designate specific washout areas and design facilities to handle anticipated washout with water.
   b. Washout areas must also be provided for paint and stucco operations. Because washout areas can be a source of pollutants from leaks or spills, it is required that they be located at least 50 yards away from storm drains and watercourses.
   c. Regular inspection & maintenance are important for these BMPs. If there is evidence that contractors are dumping materials or into drainage facilities, of if the washout areas are not being used regularly, the SWPPP designer must consider posting additional signage, relocating the facilities to more convenient locations, or providing training to workers and contractors.

4. Establish proper equipment/vehicle fueling and maintenance practices
   a. If off-site fueling and maintenance is not feasible, create an on-site fueling and maintenance area that is clean and dry. The on-site fueling area should have a spill kit, and staff should know how to use it. If possible, conduct vehicle fueling and maintenance activities in a covered area; outdoor vehicle maintenance is a potentially significant source of stormwater pollution, Significant maintenance on vehicles and equipment should be conducted off-site.
   b. Clearly designate vehicle/equipment service areas away from drainage facilities and watercourses to prevent stormwater run-on and runoff.

5. Develop a spill prevention and response plan.
   a. A Spill Prevention and Response Plan is required for the SWPPP that addresses fueling, maintenance, or storage areas on the site. The plan must comply with the requirements of NDEQ Title 126, Chapter 18 - *Rules and Regulations Pertaining to the Management of Wastes.* If the permittee knows, or has reason to believe, that oil or hazardous substances were released at the facility and could enter Waters of the State or any of the outfall discharges authorized by the permit, the permitte must immediately notify the Nebraska Department of Environmental Quality of a release of oil or hazardous substances. The contact number during office hours is 402-471-2186. When NDEQ cannot be contacted, the permittee must report to the Nebraska State Patrol for referral to the NDEQ Emergency Response Team at telephone number 402-471-4545.
   b. The plan should clearly identify ways to reduce the chance of spills, stop the source of spills, contain and clean up spills, dispose of materials contaminated by spills, and train personnel responsible for spill prevention and response. The plan should also specify material handling procedures and storage requirements and ensure that clear and concise spill cleanup procedure are provided and posted for areas in which spills may potentially occur.
   c. When developing a spill prevention plan, include, at a minimum, the following:
      - Note the locations of chemical storage areas, storm drains, tributary drainage areas, surface water bodies on or near the site, and measures to stop spills from leaving the site.
      - Specify how to notify the appropriate authorities to request assistance.
      - Describe the procedures for immediate cleanup for spills and proper disposal.
      - Identify personnel responsible for implementing the plan in the event of a spill.

9.3.9 SWPPP Inspection, Maintenance and Enforcement Procedures

Inspection & Maintenance Requirements

1. All SWPPP plans submitted for approval must include placement of the following statement, "All sediment and erosion control practices will be inspected at least once every seven calendar days and after any storm event of greater than 0.5 inches of precipitation during any 24-hour period by responsible personnel. Any necessary repairs or cleanup to maintain the effectiveness of the best management practices must be made immediately."

2. Inspections should be conducted by qualified personnel who are knowledgeable in the principles and practices of erosion & sediment control. Qualified personnel should possess the technical skills to assess conditions at the construction site that could impact stormwater quality, and assess the effectiveness of any erosion & sediment control measures selected.

3. A log of these inspections must be retained with the SWPPP, along with photographs or other supporting information. Any deficiencies must be noted in a report if the inspection and include any action taken to correct the deficiency. Inspection reports and follow-up documentation regarding violations and associated corrective actions must be submitted to the NRD or to the Lincoln Public Works and Utilities Department upon request.

4. Inspection reports must include the following information:
   a. Inspectors name
   b. Inspection date
   c. Weather information for the period since the last inspection including a best estimate of the beginning of each storm, its duration, approximate amount of rainfall for each storm, and whether any discharges occurred.
   d. Findings of the inspections
   e. Any corrective actions taken (including dates, times, and party completing maintenance activities)
   f. Documentation of changes made to the SWPPP
   g. Monitoring results, if requested

5. Record keeping: The permittee must keep copies of the SWPPP, inspection records, copies of all reports required by the permit, and records of all data used to complete the NOI to be covered by the permit for a period of at least three (3) years from the date that permit coverage expires or is terminated. Records should include:
   a. A copy of the SWPPP, with any modifications
   b. A copy of the NOIand Notice of Termination (NOT) and any stormwater-related correspondence with federal, state, and local regulatory authorities
   c. Inspection forms, including the date, place, and time of BMP inspections
   d. Names of inspector(s)
   e. The date, time, exact location, and a characterization of significant observations, including spills and leaks
   f. Records of any non-stormwater discharges
   g. BMP maintenance and corrective actions taken at the site (Corrective Action Log)
   h. Any documentation and correspondence related to endangered species and historic preservation requirements
   i. Date(s) when major land disturbing (i.e. clearing, grading, and excavating) activities occur in an area
   j. Date(s) when construction activities are either temporarily of permanently ceased in an area
   k. Date(s) when an area is either temporarily or permanently stabilized

Enforcement Procedures

1. By submittal of the SWPPP for approval, the applicant certifies the right of the City/NRD to conduct on-site inspections at any time.

2. Pursuant to Lincoln Municipal Code (LMC) Section 28.01.110, it is unlawful for any person to:
   a. Engage in large construction activity without a permit
   b. Violate any term or condition of the permit
   c. Violate any term or condition of the SWPPP, or
   d. Violate any provision of Chapter 28.01

   Violations will be addressed pursuant to the LMC.

3. Upon completion of the grading, implementation of the SWPPP and permanent, final stabilization of the site, the landowner/land developer must submit a "Notice of Termination of Construction Activity" to the NRD.

4. A final inspection will be made by the City and/or NRD for full and final compliance.

9.4 Best Management Practice (BMP) Selection

This section provides a decision-making process that can be used to select best management practices (BMPs) to control erosion and sedimentation. It also provides principles for the selection of BMPs for "good housekeeping" on a construction site.

9.4.1 Steps in Selection of Control Measures

Step 1. Identify Control Method(s) - On any construction site the objective in erosion and sediment control is to prevent off-site sedimentation damage. Three basic methods are used to control sediment transport from construction sites: runoff control, soil stabilization, and sediment control. Controlling erosion (runoff control and soil stabilization) should be the first line of defense. Controlling erosion is effective for small disturbed areas such as single lots or small areas of a development that do not drain to a sediment trapping facility. Sediment trapping facilities should be used on large developments where mass grading is planned, where it is impossible or impractical to control erosion, and where sediment particles are relatively large. Runoff control and soil stabilization should be used together where soil properties and topography of the site make the design of sediment trapping facilities impractical. Cost-effective erosion and sediment control typically includes a combination of vegetative and structural erosion and sedimentation control measures.

Step 2. Identify Problem Areas - Potential erosion and sediment control problem areas should be identified. Areas where erosion is to be controlled will usually fall into categories of slopes, graded areas or drainage ways. Slopes include graded rights-of-way, stockpile areas, and all cut and fill slopes. Graded areas include all stripped areas other than slopes. Drainage ways are areas where concentrations of water flow naturally or artificially, and the potential for gully erosion is high.

Step 3. Identify Required Strategy - The third step in erosion and sediment control planning is to develop a strategy that can be taken to solve the problem. For example, if there is a cut slope to be protected from erosion, the strategies may include protecting the ground surface, diverting water from the slope or shortening the slope. Any combination of the above can be used. If no rainfall except that which falls on the slope has the potential to cause erosion and if the slope is relatively short, protecting the soil surface is often all that is required to solve the problem.

Step 4. Select Specific Control Measures - The final step in erosion and sediment control planning can be accomplished by selecting and adapting specific control measures that accomplish the strategy developed in Step 3. From descriptions given on the matrix in Figure 9-2, the measure which is most economical, practical, efficient, and adaptable to the site should be chosen. Once the specific control measure has been selected, a plan key symbol corresponding to the standard construction specification for that measure found in Section 9.6 can be placed on the erosion and sediment control plan to show where control measures will be used. Items to consider when selecting a final best management practice are as follows:

- **Acceptance** - Look at environmental compatibility, institutional acceptance and visual impact.
- **Cost** - Consider material cost, add-ons, installation and preparation costs. (See the LPSNRD (1994) *Manual of Erosion and Sediment Control and Stormwater Management* for detailed examples on conducting benefit-cost analysis.)
- **Effectiveness** - Compare effectiveness of different BMP's. Use manufacturer specs to compare engineering properties. BMP technology has improved dramatically; it is important to be familiar with new, effective techniques & products for effective erosion & sediment control.
- **Installation** - Consider ease of installation and durability once installed.
- **Vegetation** - Consider compatibility of BMP to foster vegetation.
- **Operation** - Consider maintenance requirements for the various BMPs, and care for establishing vegetation.

9.5 Best Management Practice Design

9.5.1 Introduction

This section provides a discussion of commonly used erosion and sediment control practices with specific emphasis on use limitations, design details and construction specifications. Please note that this section provides an overview of the more common BMPs.

9.5.2 Vegetated Buffer/Filter Strip

Vegetated buffers are areas of either natural or established vegetation that are to protect water quality of neighboring areas. As shown in figure 9-4, vegetated buffer/filter strips reduce the velocity of storm water runoff, provide an area for the runoff to premeate the soil, contributes to ground water recharge, and acts as a filter to catch sediment. The reduction on velocity also helps to prevent soil erosion. With proper design and maintenance they can be viewed as a landscape amenity.

Design Detailing

- Soils should not be compacted
- Slopes should be less than 5 percent
- Buffer with should be determined after careful consideration of slope, vegetation, soils, depth of impermeable layers, runoff sediment characteristics, types and quanity of storm water pollutants, and annual rainfall.
- Buffer widths should increase as the slope increases.
- Zones of vegetation (native vegetation in particular), including grasses, deciduous and evergreen shrubs and trees should be intermixed.
- In areas where flows are concentrated and velocities are high, vegetated buffer/.filter strips should be combined with other structural or nonstructural BMPs as a pretreatment.

Maintenance

Keeping vegetation healthy in a vegetated buffer/filter strip requires routine maintenance, which (depending on species, soil types, and climate conditions) can include weed and pest control, mowing, fertilizing, irrigating , and pruning. Inspection and maintenance are most important when buffers are first installed. Once established, vegetated buffer/filter strips do not require much maintenance beyond the routine procedures. Inspections should be conducted after any heavy rainfall and at least once a year. Inspections should be focused on encroachment, gully erosion, density of vegetation, any evidence of concentrate flows through the area or any foot or vehicle traffic that might have caused damage.

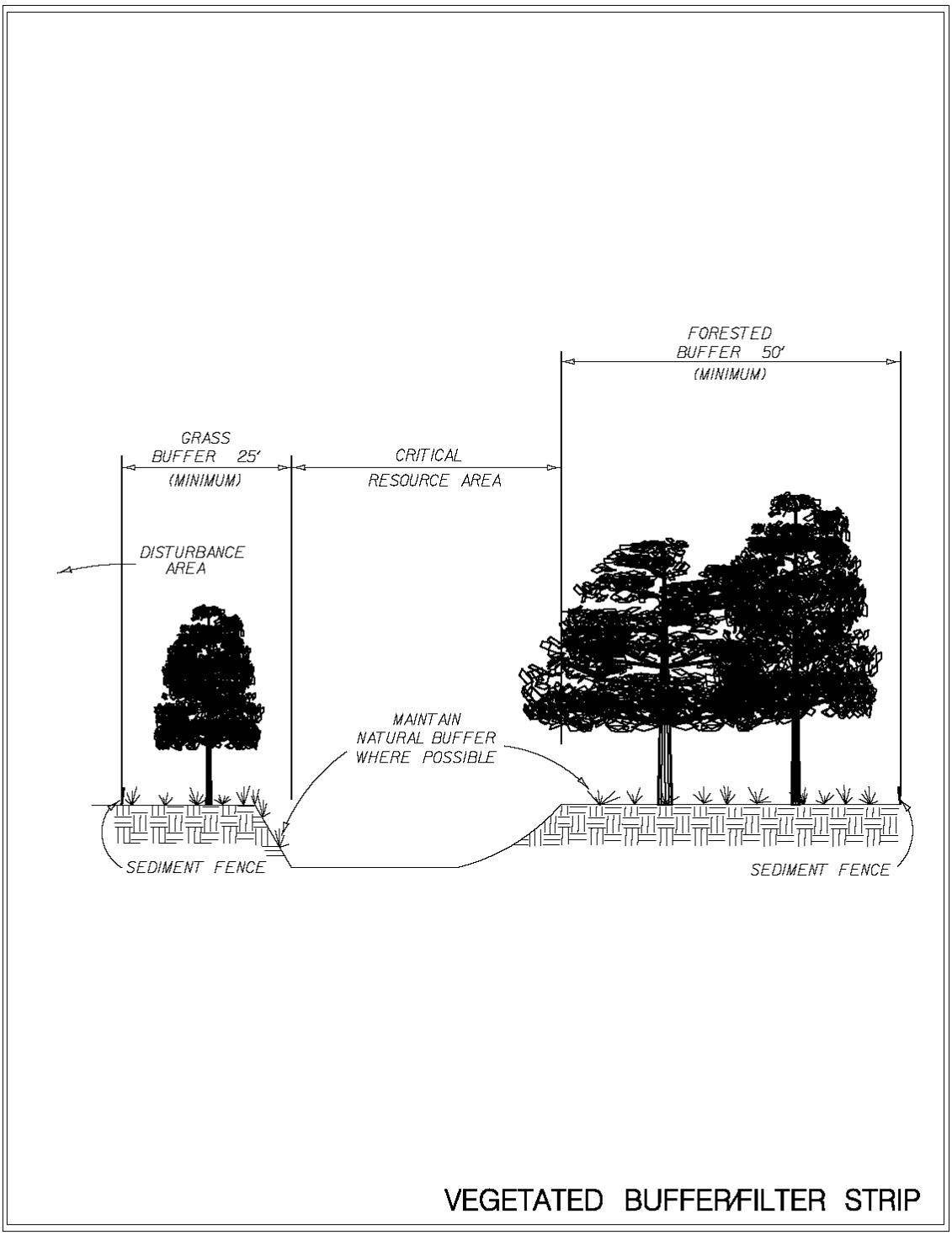

Figure 9-4: Vegetated Filter/Buffer Strip

9.5.3 Silt Fence

Silt fence is a temporary sediment barrier consisting of a synthetic fabric stretched across and attached to supporting posts and entrenched or sliced in place. Figures 9-5 through 9-8 provides an example illustrations of installation and placement of silt fence. Silt fences can be used in the following applications:

- for intercepting and detaining small amounts of sediment from disturbed areas during construction operations in order to prevent sediment from leaving the construction site,
- for decreasing the velocity of sheet flows
- in high-risk areas, such as those adjacent to streams, wetlands, reservoirs, lawns, etc.,
- in short lengths at the toe of fill where ground slopes toward the fill,
- behind curb and gutter to prevent silting of the pavement.

Prior to start of construction, silt fence placement should be designed by a qualified professional. Plans and specifications should be referred to by field personnel throughout the construction process.

Use Limitations

- If the size of the drainage areas is more than 1/4-acre per 100 feet of silt fence length, a different sediment and erosion control strategy should be investigated. The maximum gradient behind the barrier should be no more than 50% (2H:1V).
- Under no circumstances should silt fences be constructed in live streams or in swales or ditch lines where flows are likely to exceed 1 cubic foot per second.
- On steep slopes, care should be given to placing alignment of fence perpendicular to the general direction of the flow.

Design Detailing

- Drainage Area: Limited to 1/4 acre per 100 feet of fence. Area is further restricted by slope steepness as shown in Table....

Table 9-1: Typical Land Slope and Distance for Silt Fence

Land slope (%)	Maximum Slope Distance* above fence (Feet)
Less than 2	150
2 to 5	100

*Follow manufacturer's recommendations for proper placing.

- Location: Fence should be built on a nearly level grade and at least 6 feet from the toe of the slope to provide a broad shallow sediment pool.

- Length: Maximum of 100 Feet. Runs of silt fence should always be designed on the contour for maximum sediment retention. Flare ends of the fence uphill to temporarily impound water. Proper placement and location of silt fence is further explained in figures 9.5-9.8

Construction Guidelines

The following guidelines apply to silt fence materials:

- Support Posts: A minimum weight of 1.0 lb./linear foot steel 'T' posts or 2-inch square wood stakes, buried or driven to a length of 18-24 inches.

- Support Post Spacing: Post spacing should be a maximum of 6 feet.
- Synthetic Geotextile Fabric: Conforming to specifications in the table below and containing ultraviolet light inhibitors and stabilizers. Minimum design life of 6 months. The following minimum specifications are:

  - Filtering Efficiency Test -75% (ASTM 5141)
  - Tensile Strength at 20% (max) Elongation - 30 lb./linear inch (ASTM 4632)
  - High Strength - 50 lb./linear inch (ASTM4632)
  - Flow Rate - 0.2 gal./sq. ft./minute (ASTM 5141)
  - Ultraviolet Radiation Stability - 90% (ASTM-G-26)

    Note: Properties are reduced by 50% after 6 months.

- The height of a silt fence shall not exceed 3 feet (higher fences may impound volumes of water sufficient to cause failure of the structure).
- When joints are necessary, filter cloth shall be spliced together only at a support post, with a minimum 6-inch overlap, and securely sealed.
- A trench shall be excavated approximately 4 inches wide and 8 inches deep along the line of posts and upslope from the barrier.
- The trench must be backfilled and the soil compacted on both sides of the trench and over the filter fabric.
- Silt fences should be removed when they have served their useful purpose, but not before the upslope area has been permanently stabilized.

9.5.4 Silt Fence Installation Machines

Silt fence installation machines insert a narrow custom-shaped blade at least 10 inches into the ground and simultaneously pull silt fence fabric into the small opening created as the blade is pulled through the ground.

Construction Guidelines

When silt fence is used in a stormwater pollution prevention plan, a silt fence installation machine should be used to place the silt fence. By slicing the fence into the ground and compacting soil over the imbedded fence, a sturdy structure is created that can trap sediment more efficiently.

See Figures 9.5 - 9.8 for installation guidelines.

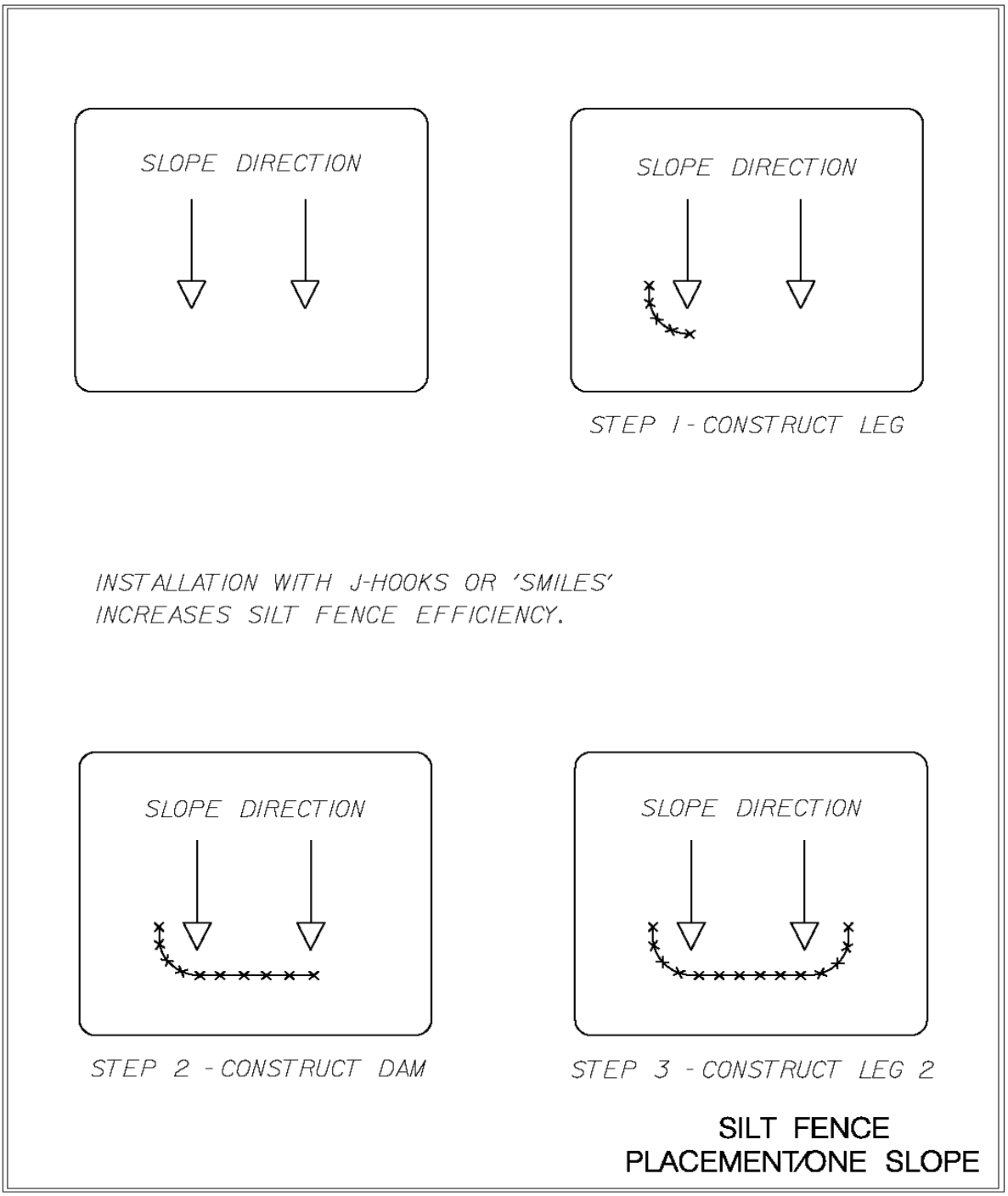

Figure 9-5: Silt Fence Placement- One Slope

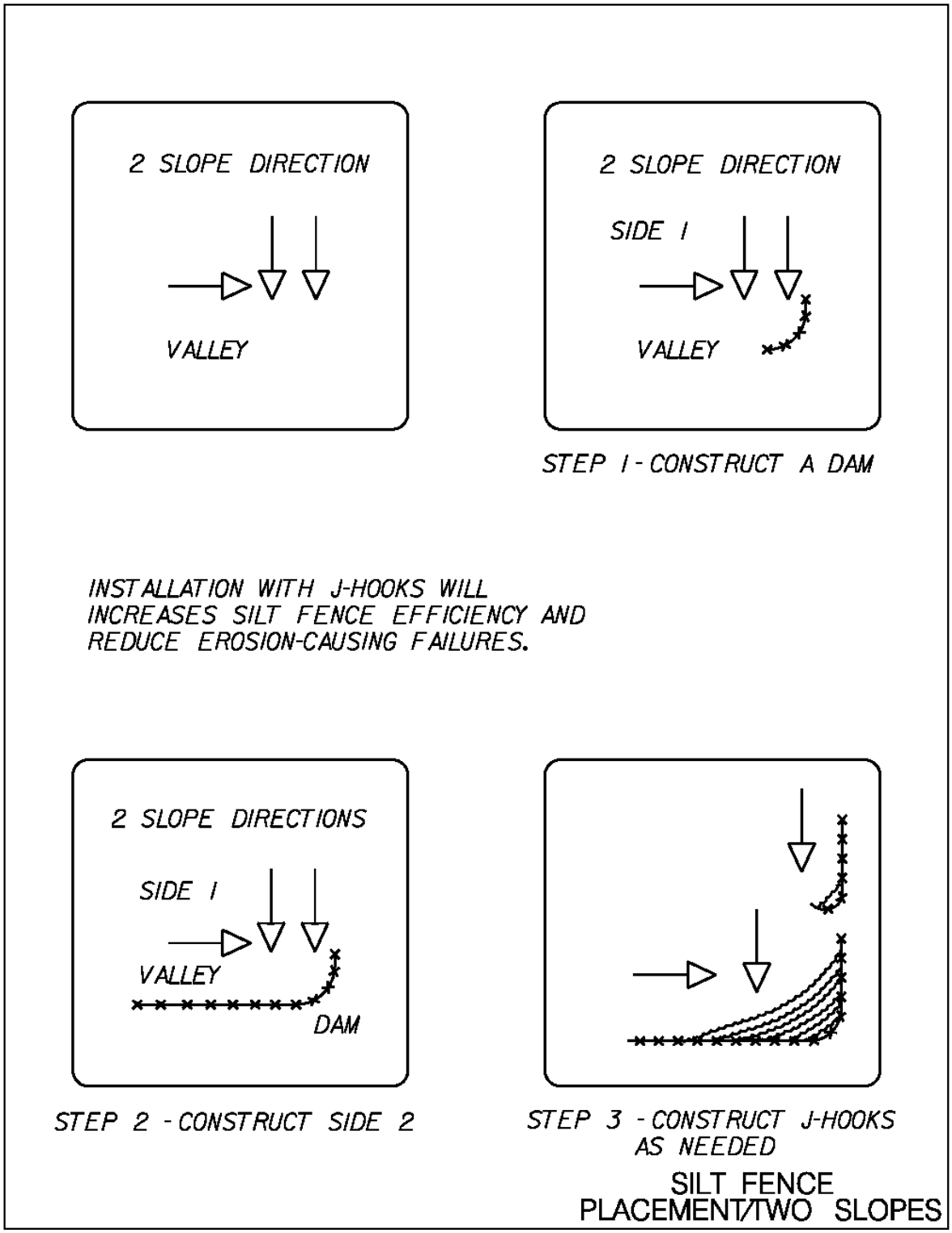

Figure 9-6: Silt Fence Placement- Two Slopes

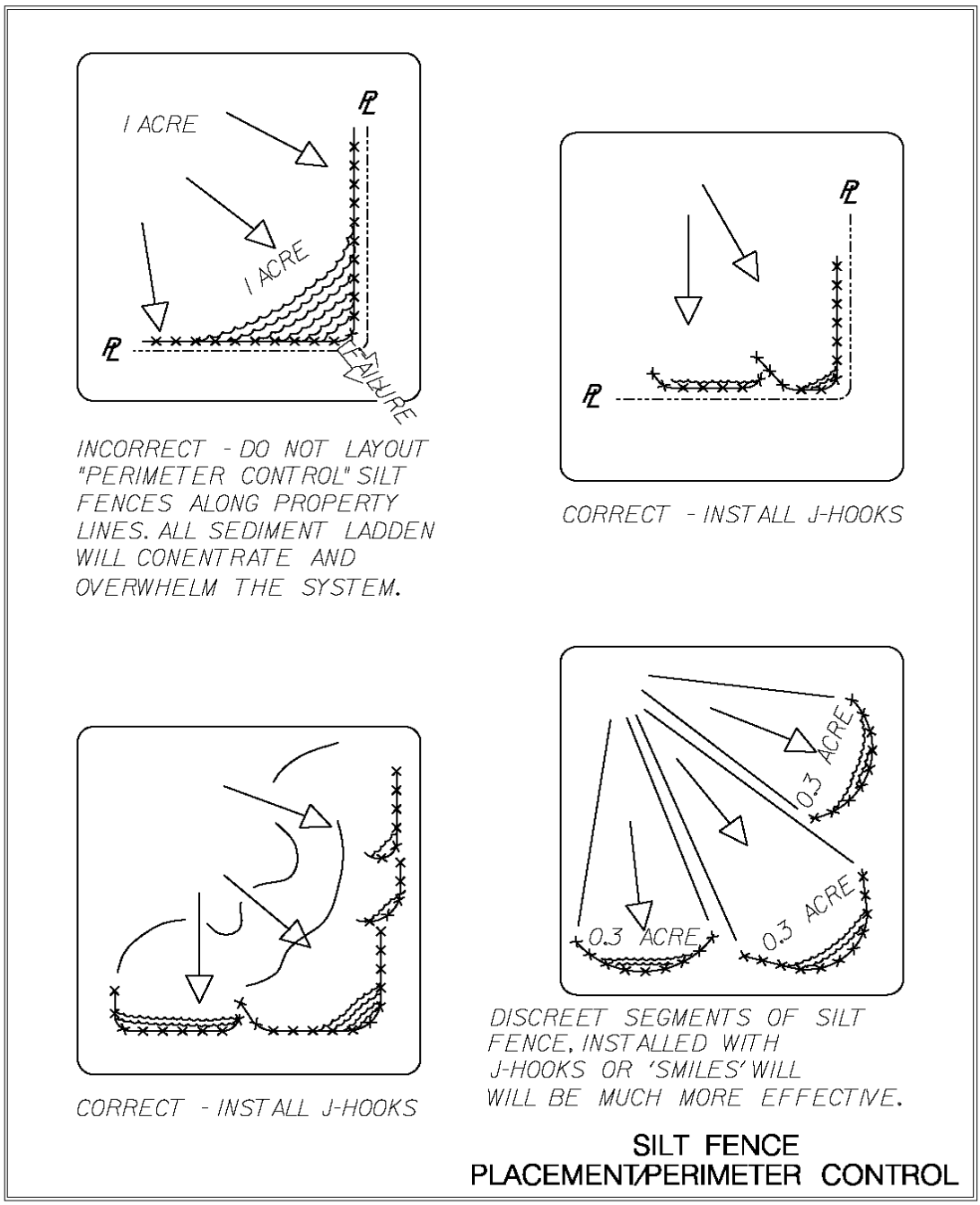

Figure 9-7: Silt Fence Placement - Perimeter Control

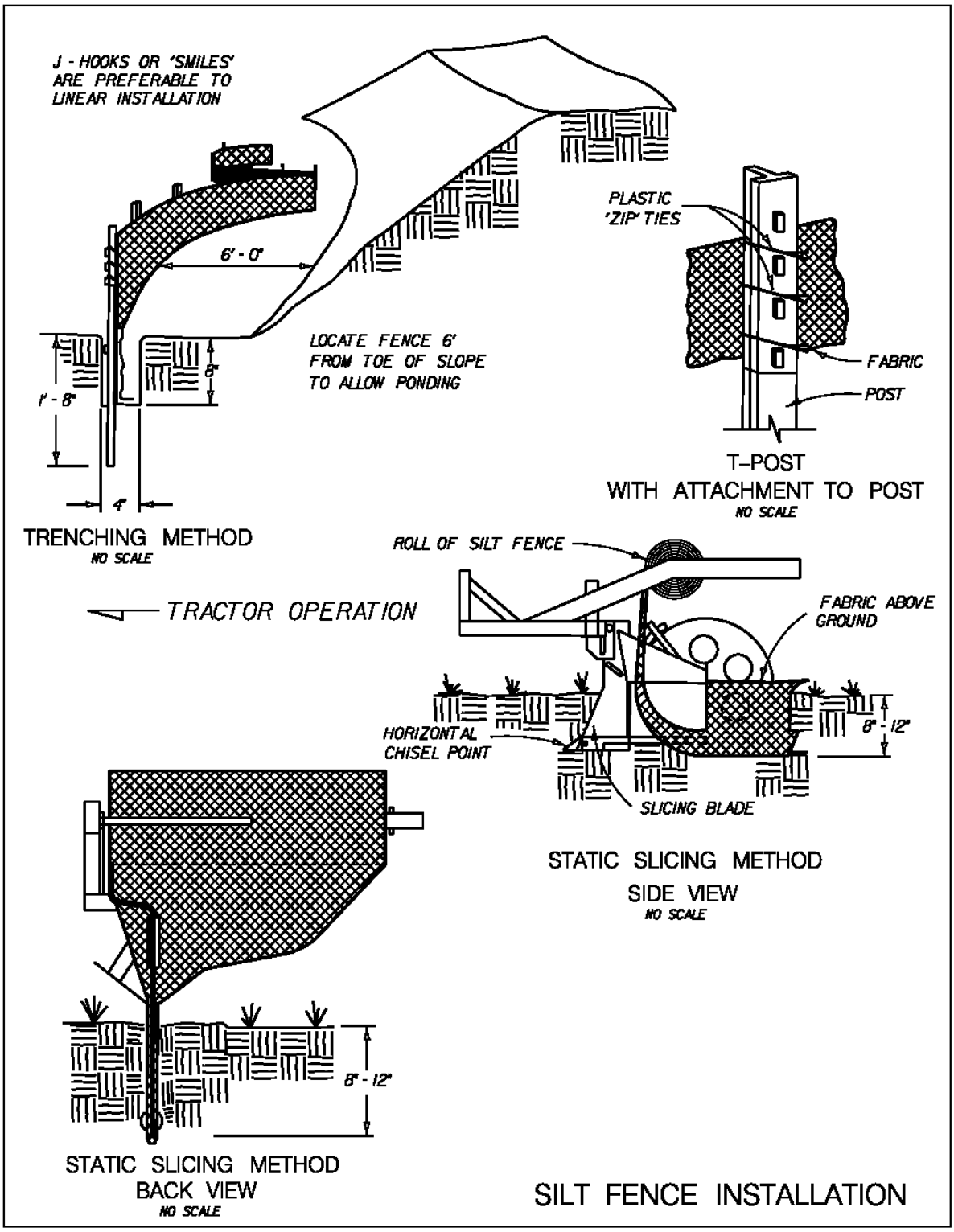

Figure 9-8: Silt Fence Installation/Slicing Method

9.5.5 Wattle Barriers

Wattle Barriers are elongated tubes of compacted straw and or other fibers that are installed along contours or at the base of slopes to help reduce soil erosion and retain sediment. They function by shortening slope lengths; reducing runoff water velocity thus trapping dislodged soil particles. They can work as check dams to prevent sheet, rill, and gully erosion.

Design Detailing

- Wattle Barriers are designed for low surface flow and not be place in the path of high waterflow.
- Wattles should be placed on contours with a slight downward angle at the end of the row to prevent ponding at the mid-section.
- Wattles should be installed in a shallow trench with the running lengths abutted firmly to ensure no leakage at the abutments.
- When the Wattle is installed behind a sidewalk or curb, Wattle does not have to be placed in a trench.
- Vertical spacing for slope installation shall be determined by the site conditions.
  1:1 10 Feet apart
  2:1 20 Feet apart
  3:1 30 Feet apart
  4:1 40 Feet apart
- Use wooden stakes or willow cuttings. Wood stakes will eventually bio-degrade and willow cuttings have the potential to grow and provide additional stabilization. Stakes are to be driven through the middle of the wattle leaving 2 - 3 inches protruding above the wattle.

Maintenance

The Wattle Barriers shall be inspected after installation to insure that they are trenched in and that no gaps exist underneath or between adjacent ends and must be inspected after significant rainfall event. Any rills, gullies, and undercutting on the upslope side must be repaired. Sediment must be removed when it reaches one third of the height. Wattle Barriers must be removed and/or replaced as required to adapt to changing conditions.

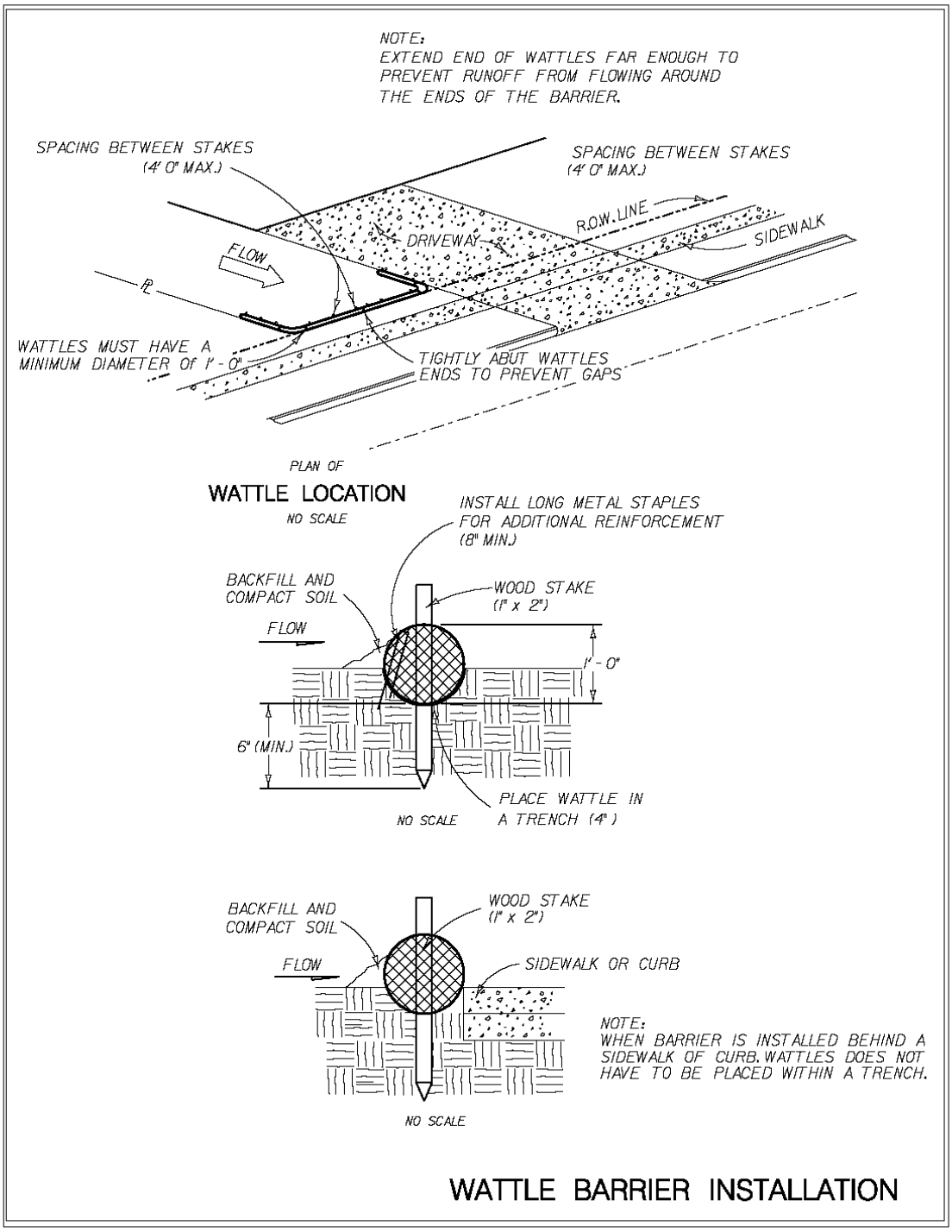

Figure 9-9: Wattle Barrier Installation

9.5.6 Compost Berms

Compost berms are contoured runoff and erosion filtration methods usually used for steeper slopes with high erosive potential. The berm allows runoff water to penetrate it and continue to flow while filtering sediment and pollutants from the water. It also slows the flow down, allowing soil particles to settle out. Compost berms work well when the slope exceeds 4:1.

Design Detailing

- Berm size may vary based on slope severity, larger berms are recommended for steeper slopes.
- Compost berms are typically contoured to the base of the slope.
- Berms may be windrow or trapezoidal (allows maximum water penetration) in shape
- Windrow shaped berms should be between 1 to 2 feet high and 2.5 to 4 feet wide.
- Trapezoidal berms should be approximately 2 feet high, 2 to 3 feet wide at the top and at least 4 feet wide at the base
- Placed on uncompacted or bare soil.
- Vegetation or compost blankets may be used in front or above the berms but never under them.
- Can be seeded at time of installation for additional filtering capacity.
- Never construct compost berms in runoff channels, ditches or gullies.

Maintenance

Accumulated sediment should be removed, or a new berm installed, when it reaches approximately one-third of the berm height. If concentrated flows are bypassing or breaching the berm, it must be expanded, enlarged or augmented with additional erosion and sediment control practices. Dimensions of the berm must be maintained. Any damage should be repaired immediately.

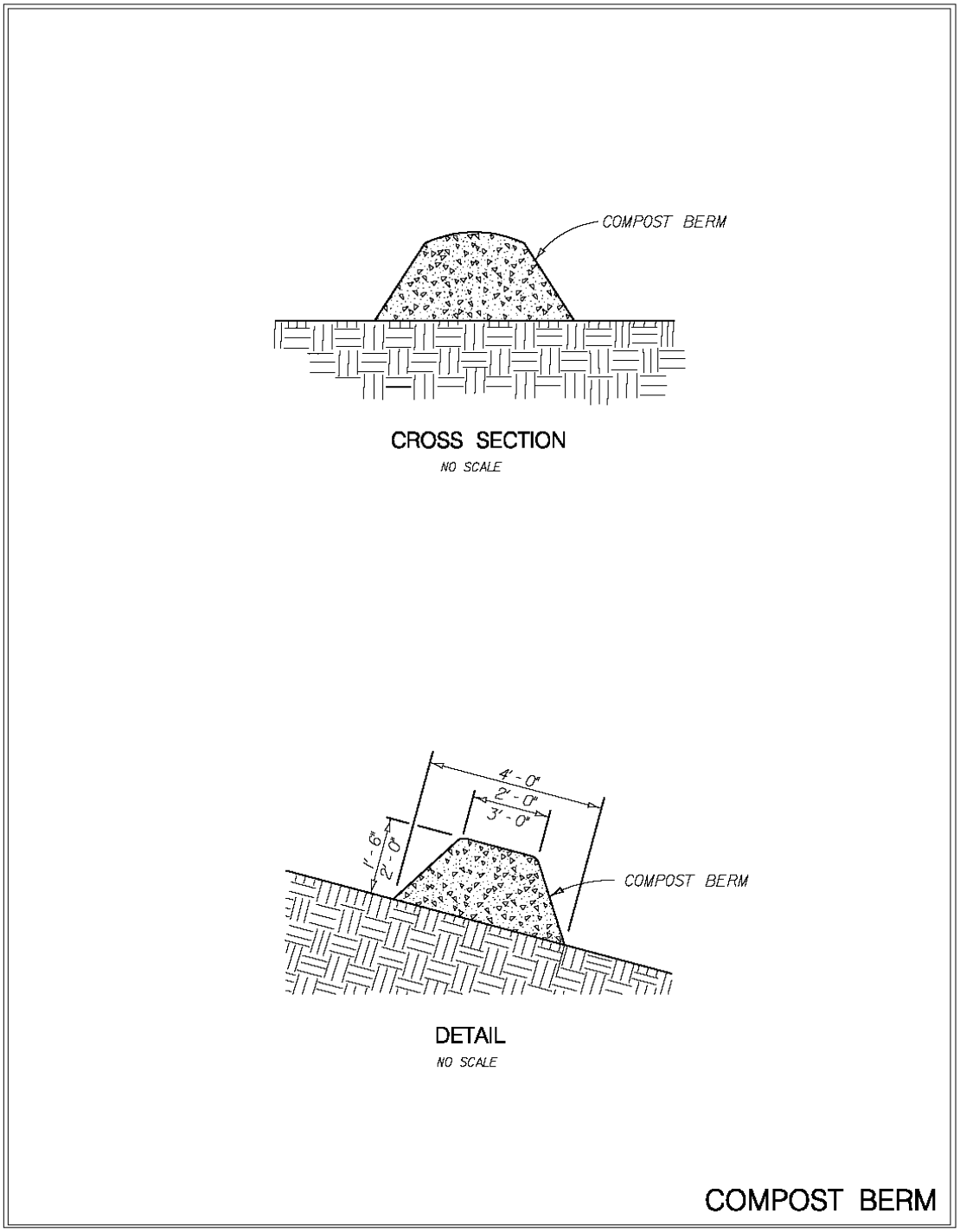

Figure 9-10: Compost Berm Detail

9.5.7 Storm Drain Inlet Protection

Storm drainage inlet protection is a sediment filter or an excavated impounding area around a storm drain drop inlet or curb inlet. Its purpose is to prevent sediment from entering storm drainage systems prior to permanent stabilization of the disturbed area. Different types of storm drain inlet protection are shown in Figures 9-11 through 9-16.

Conditions Where Practice Applies

This practice shall be used where the drainage area to an inlet is disturbed, it is not possible to temporarily divert the storm drain outfall into a trapping device and watertight blocking of the inlets is not advisable. It is not to be used in place of sediment trapping devices. This may be used in conjunction with storm drain diversion to help prevent siltation of pipes installed with low slope angle. There are eight specific types of storm drain inlet protection practices that vary according to their function, location, drainage area and availability of materials:

1. Silt Fence Drop-Inlet Protection
2. Block and Gravel Drop-Inlet Sediment Filter
3. Gravel Curb Inlet Sediment Filter
4. Curb Inlet Protection with Weir
5. Block and Gravel Curb Inlet Sediment Filter

Design Detailing

- The drainage area shall be no greater than 1 acre.
- The inlet protection device must be constructed in a manner that will facilitate cleanout and disposal of trapped sediment and minimize interference with construction activities.
- The inlet protection device must be constructed in such a manner that any resultant ponding of stormwater will not cause excessive inconvenience or damage to adjacent areas of structures.
- Design criteria more specific to each particular inlet protection device will be found within this specification.
- For the inlet protection devices which utilize stone as the chief ponding/filtering medium, a range of stone sizes is offered, 3/4" to 1-1/2" clean stone can be used. The designer should attempt to get the greatest amount of filtering action possible (by using smaller size stone), while not creating significant ponding problems.
- In all designs which utilize stone with a wire mesh support as a filtering mechanism, the stone can be completely wrapped with the wire mesh to improve stability and provide easier cleaning.
- Filter fabric may be added to any of the devices which utilize coarse aggregate stone to significantly enhance sediment removal. The fabric should be secured between the stone and the inlet (on wire mesh if present). As a result of the significant increase in filter efficiency provided by the fabric, a larger size of stone aggregate (1-1/2" to 2-1/2"), may be utilized with such a configuration. The larger stone will help keep larger sediment masses from clogging the fabric. Notably, significant ponding may occur at the inlet if the filter cloth is utilized in this manner.

Construction Guidelines

1. Silt Fence-Type II Grate Inlet Protection
   a. Silt fence shall be cut from a continuous roll to avoid joints.
   b. Stakes should be steel ‘T’ posts with a minimum length of three feet. Stakes shall be spaced evenly around the perimeter of the inlet a maximum of three feet apart and securely driven into the ground a minimum of 18-24 inches deep.
   c. Place the bottom 8 inches of the fabric in a trench and backfill the trench with 8 inches of compacted soil.
   d. Fasten fabric securely by plastic “zip” ties to the stakes and frame. Joints must be overlapped to the next stake.
   e. It may be necessary to build a temporary dike on the downslope side of the structure to prevent bypass flow.
   f. Remove sediment from the pool area as necessary or when it reaches half the height of the fabric, with care not to undercut or damage the fabric.

2. Block and Gravel Drop-Inlet Sediment Filter

a. Place concrete blocks lengthwise on their sides in a single row around the perimeter of the inlet, with the ends of adjacent blocks abutting. The height of the barrier can be varied, depending on the design needs, by stacking combinations of 4", 8" and 12" wide blocks. The barrier shall be at least 12 inches high and no greater than 24 inches high.
b. Wire mesh shall be placed over the outside vertical face of the concrete blocks to prevent stone from being washed through the holes in the blocks. Wire mesh with ½" opening shall be used.
c. Stone shall be piled against the wire to the top of the block barrier.
e. If the stone filter becomes clogged with sediment so that it no longer adequately performs its function, the stone must be pulled away from the blocks, cleaned and replaced.

3. Gravel Curb Inlet Sediment Filter
   a. Wire mesh with ½" openings shall be placed over the curb inlet opening so that at least 12 inches of wire extends across the inlet cover and at least 12 inches of wire extends across the concrete gutter from the inlet opening.
   b. Stone shall be piled against the wire so as to anchor it against the gutter and inlet cover and to cover the inlet opening completely.
   c. If the stone filter becomes clogged with sediment so that it no longer adequately performs its function, the stone must be pulled away from the inlet, cleaned and replaced.

4. Curb Inlet Protection with Weir
   a. Attach a continuous piece of wire mesh (30" minimum width x inlet throat length plus 4 feet) to the 2" x 4' wooden weir (with a total length of inlet throat length plus 2 feet). Wood shall be exterior type construction lumber.
   b. Place a piece of filter fabric the same dimensions as the wire mesh over the wire mesh and securely attach to the 2" x 4" weir.
   c. Securely nail the 2" x 4" weir to the 9" long vertical spacers which are to be located between the weir and inlet face at a maximum 6 foot spacing.
   d. Place the assembly against the inlet throat and nail 2 foot minimum lengths of 2" x 4" lumber to the top of the weir at spacer locations. These anchors shall extend across the inlet tops and be held in place by sandbags or alternate weight.
   e. The assembly shall be placed so that the end spacers are a minimum of 1 foot beyond both ends of the throat opening.
   f. Form the wire mesh and filter fabric to the concrete gutter and against the face of the curb on both sides of the inlet. Place coarse aggregate over the wire mesh and filter fabric in such a manner as to prevent water from entering the inlet under or around the filter cloth.
   g. This type of protection mush must be inspected frequently and the filter cloth and stone replaced when clogged with sediment.
   h. Assure that storm flow does not bypass inlet by installing temporary earth dikes directing flow into inlet.

5. Block and Gravel Curb Inlet Sediment Filter
   a. Two concrete blocks shall be placed on their sides abutting the curb at either side of the inlet opening. A 2" x 4" stud shall be cut and placed through the outer holes of each spacer block to help keep the front blocks in place.
   b. Concrete blocks shall be placed on their sides across the front of the inlet and abutting the spacer blocks.
   c. Wire mesh with ½" openings shall be placed over the outside vertical face of the concrete blocks to prevent stone from being washed through the holes in the blocks.
   d. Coarse aggregate shall be piled against the wire to the top of the barrier.
   e. If the stone filter becomes clogged with sediment so that it no longer adequately performs its function, the stone must be pulled away from the blocks, cleaned and replaced.

Maintenance

1. Structures must be inspected after each rain and repairs made as necessary.
2. Structures shall be removed and the area stabilized when the remaining drainage area has been properly stabilized

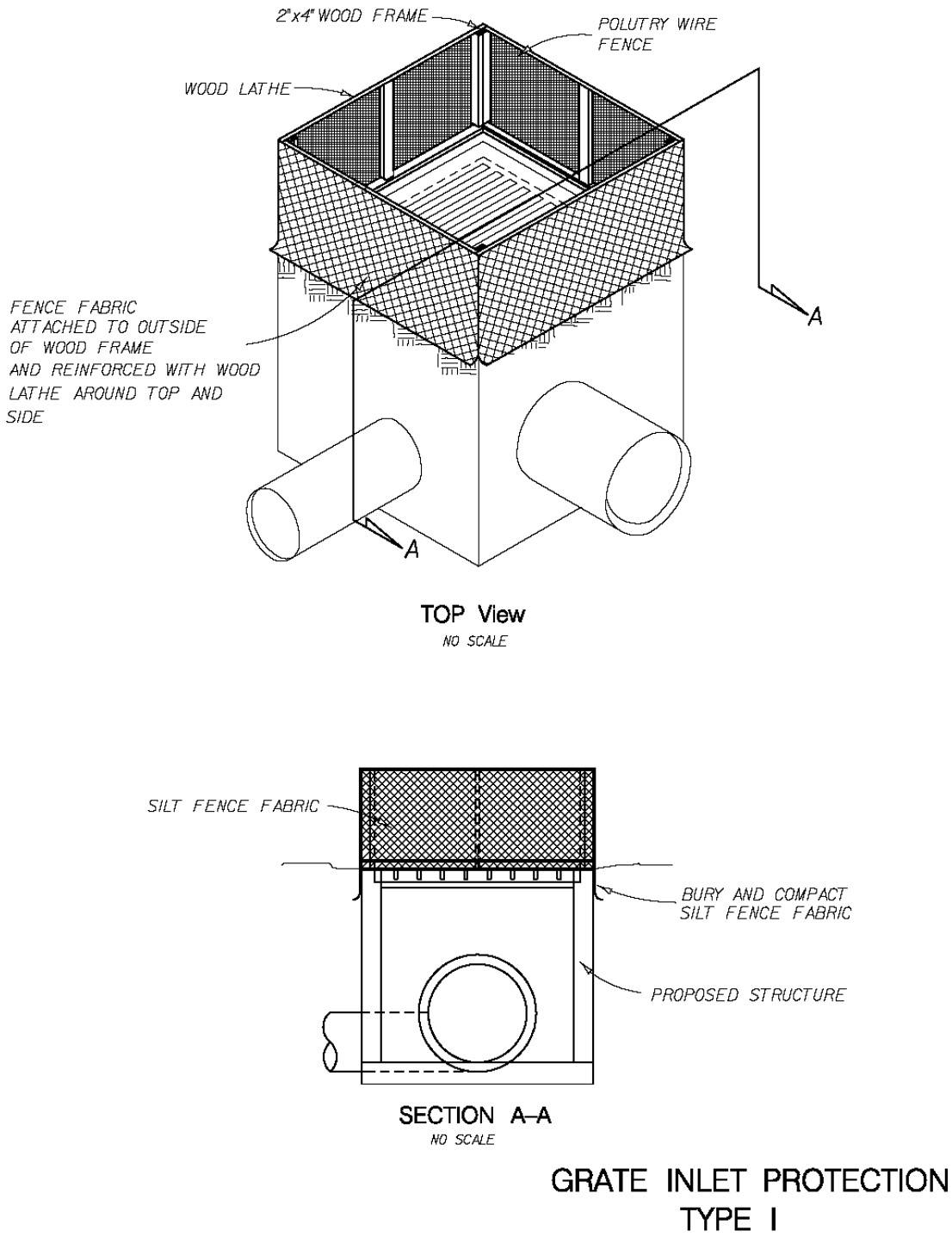

Figure 9-11: Type I Grate Inlet Protection

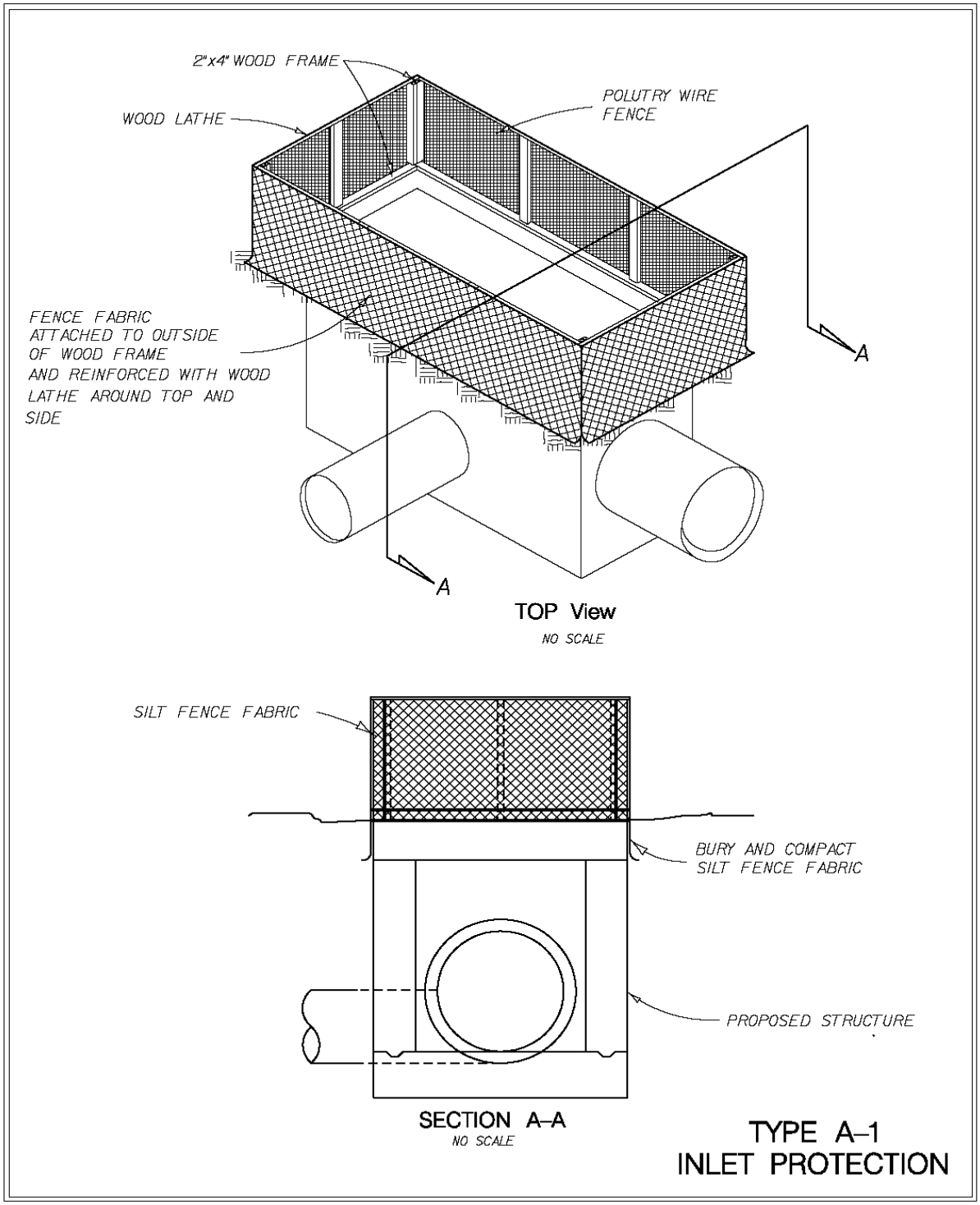

Figure 9-12: Grate Inlet Protection Type II

GRAVEL CURB INLET SEDIMENT FILTER

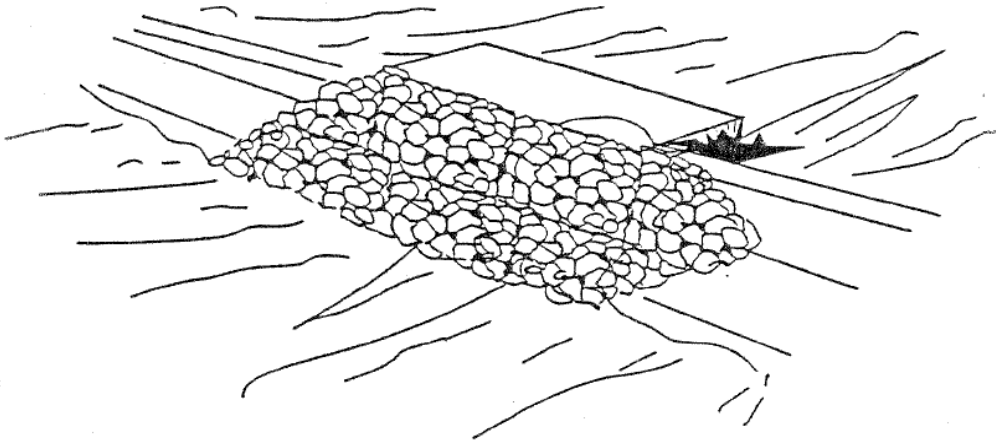

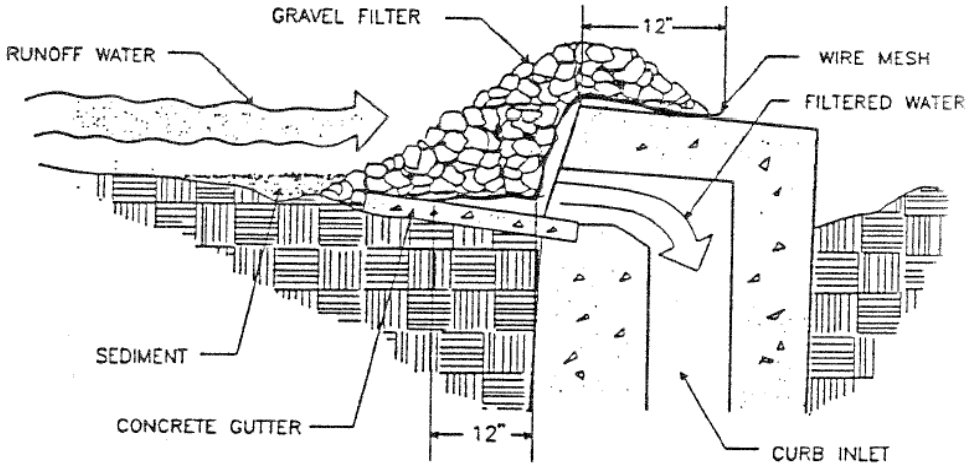

SPECIFIC APPLICATION

THIS METHOD OF INLET PROTECTION IS APPLICABLE AT CURB INLETS WHERE PONDING IN FRONT OF THE STRUCTURE IS NOT LIKELY TO CAUSE INCONVENIENCE OR DAMAGE TO ADJACENT STRUCTURES AND UNPROTECTED AREAS.

Figure 9-13: Gravel Curb Inlet Filter

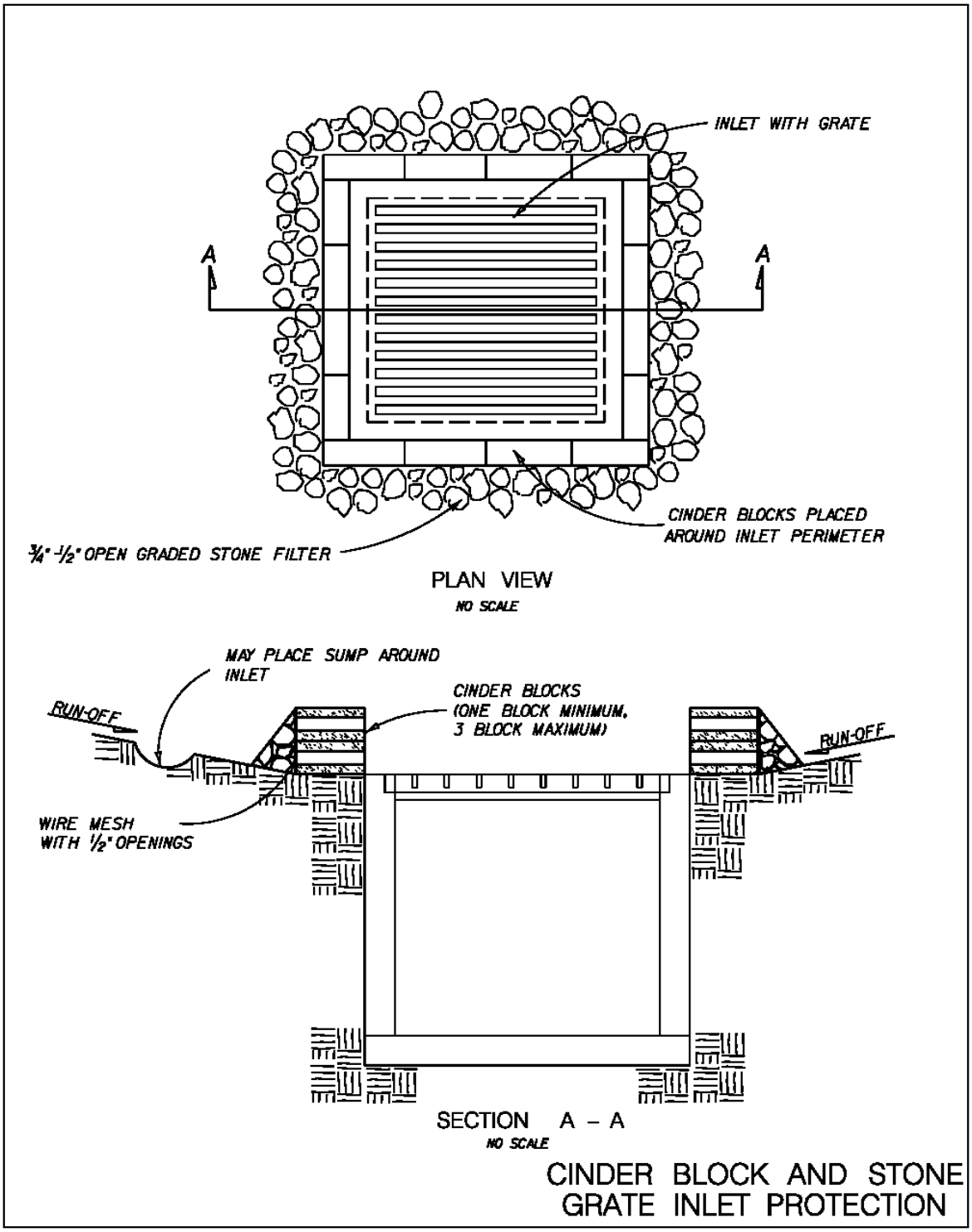

Figure 9-14: Cinder Block and Stone Grate Inlet Protection

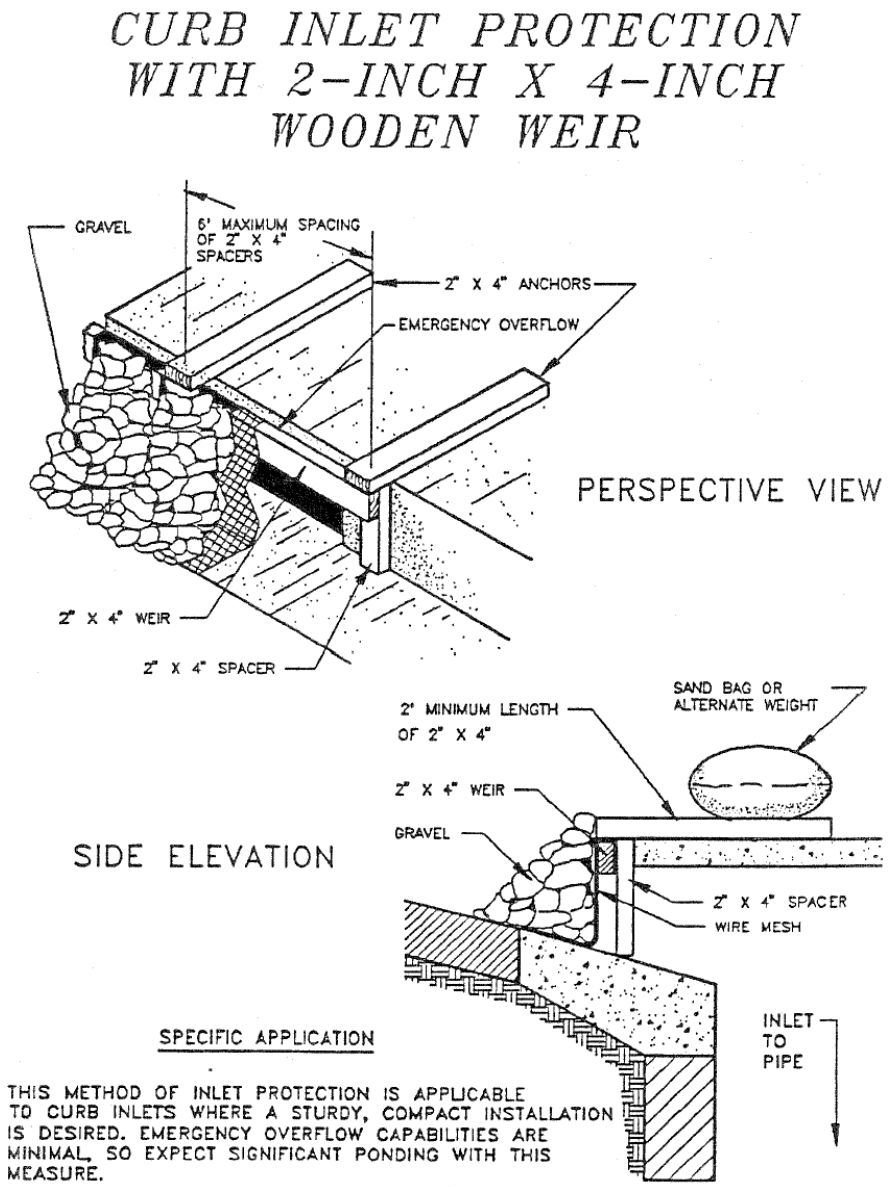

Figure 9-15: Curb Inlet Protection With 2" x 4" Wooden Weir

BLOCK & GRAVEL CURB INLET SEDIMENT FILTER

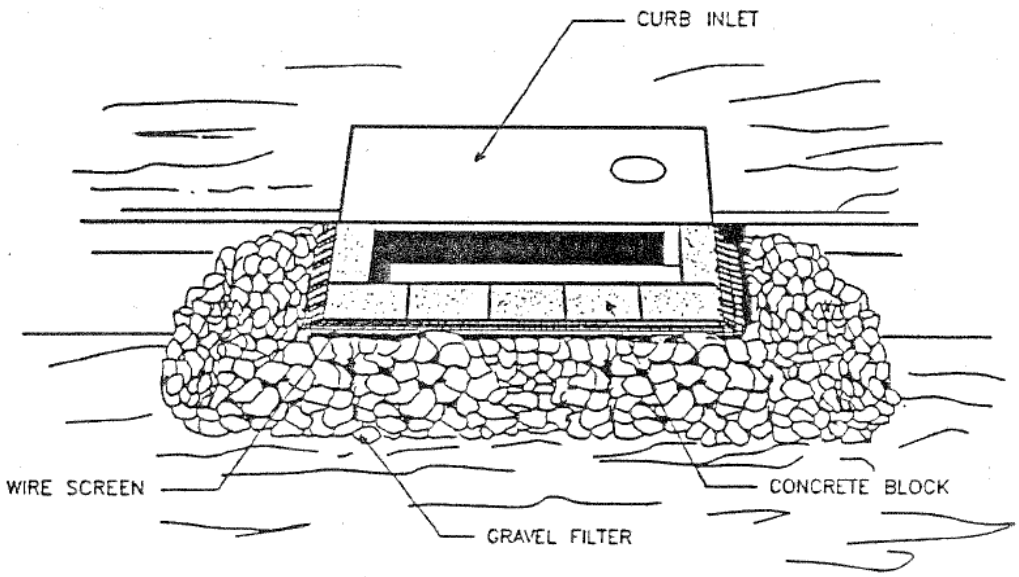

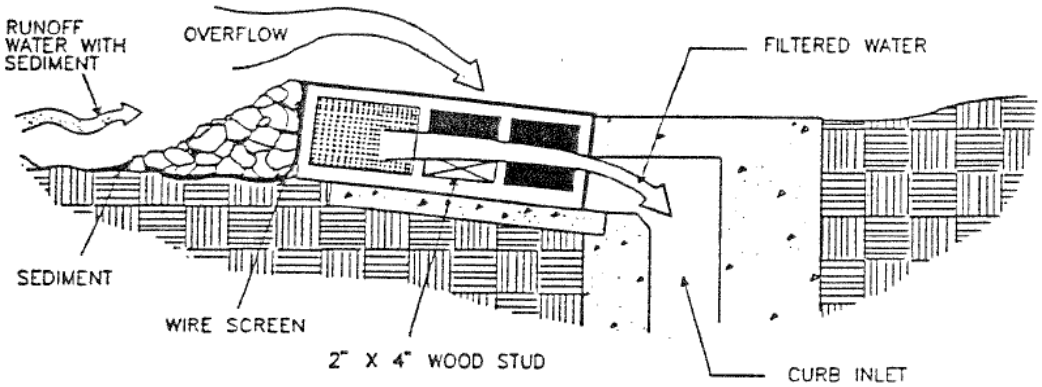

SPECIAL APPLICATION

THIS METHOD OF INLET PROTECTION IS APPLICABLE AT CURB INLETS WHERE AN OVERFLOW CAPABILITY IS NECESSARY TO PREVENT EXCESSIVE PONDING IN FRONT OF THE STRUCTURE.

Figure 9-16: Block And Gravel Curb Inlet Sediment Filter

9.5.8 Outlet Protection

The outlets of pipes and structurally lined channels are points of critical erosion potential. To prevent scour at storm-water outlets, a flow transition structure is needed which will absorb the initial impact of the flow and reduce the flow velocity to a level which will not erode the receiving channel or area.

The most commonly used device for outlet protection is a structurally lined apron. These aprons are generally lined with riprap, grouted riprap or concrete. Where flow is excessive for the economical use of an apron, excavated stilling basins or other alternative structures may be used (Figures 9-17 through 9-19). Examples of other aprons described in Chapter 7 are shown in Figure 9-7.

Design Detailing

Table 9-2 gives the permissible velocity recommendations for the determination of outlet protection needs. Additional design detailing can be found in Chapter 7 of this manual or in the following sources.

- Hydraulic Design of Energy Dissipators for Culverts and Channels, Hydraulic Engineering Circular No. 14, U.S. Department of Transportation, Federal Highway Administration.
- Hydraulic Design of Stilling Basins and Energy Dissipators, Engineering Monograph No. 25, U.S. Department of the Interior, Bureau of Reclamation.

Table 9-2 Permissible Velocities For Grass And Earth Lined Channels

Grass-Lined Channels

Channel Slope	Lining	Permissible Velocity*
0.5%	Bermuda grass	6 ft/s
	Reed canarygrass	5 ft/s
	Tall fescue	5 ft/s
	Kentucky bluegrass	5 ft/s
	Grass-legume mixture	4 ft/s
	Red fescue	4 ft/s
	Redtop	4 ft/s
	Sericea lespedeza	4 ft/s
	Annual lespedeza	4 ft/s
5-10%	Bermudagrass	5 ft/s
	Reed canarygrass	4 ft/s
	Tall fescue	4 ft/s
	Kentucky bluegrass	4 ft/s
	Grass-legume mixture	3 ft/s
>10%	Bermudagrass	4 ft/s
	Reed canarygrass	3 ft/s
	Tall fescue	3 ft/s
	Kentucky bluegrass	3 ft/s

Earth Linings

Soil Types	Permissible Velocity[1]
Fine Sand (noncolloidal)	2.5 ft/s
Sandy Loam (noncolloidal)	2.5 ft/s
Silt Loam (noncolloidal)	3.0 ft/s
Ordinary Firm Loam	3.5 ft/s
Fine Gravel	5.0 ft/s
Stiff Clay (very colloidal)	5.0 ft/s
Graded, Loam to Cobbles (noncolloidal)	5.0 ft/s
Graded, Silt to Cobbles (colloidal)	5.5 ft/s
Alluvial Silts (noncolloidal)	3.5 ft/s
Alluvial Silts (colloidal)	5.0 ft/s
Coarse Gravel (noncolloidal)	6.0 ft/s
Cobbles and Shingles	5.5 ft/s
Shales and Hard Pans	6.0 ft/s

[1]For highly erodible soils, decrease permissible velocities by 25%

*Source: Soil and Water Conservation Engineering, Schwab, et. al. and American Society of Civil Engineers

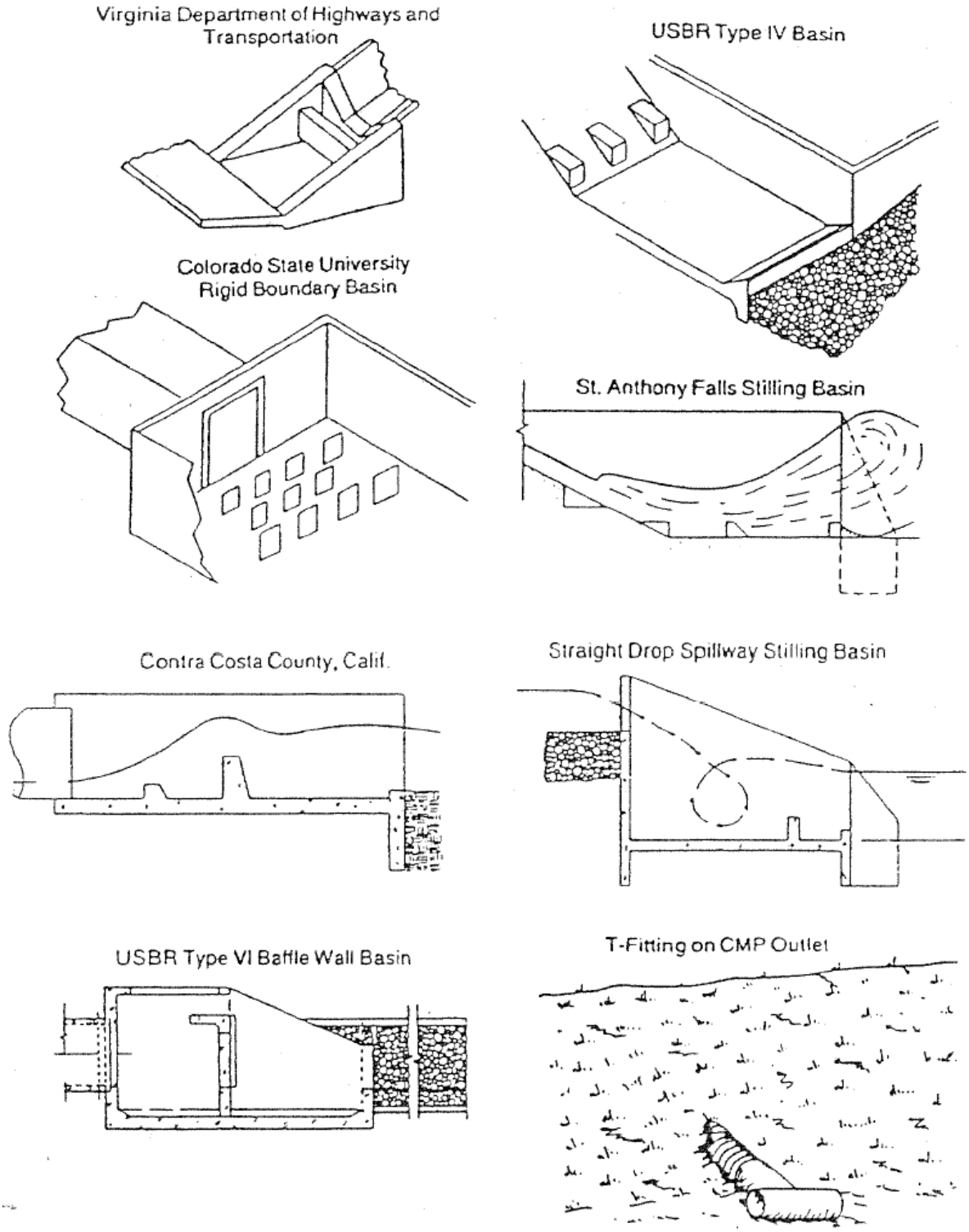

Figure 9-17: Structures Used For Outlet Protection By Dissipating Energy

Source: North Carolina Erosion And Sediment Control Manual, 1988.

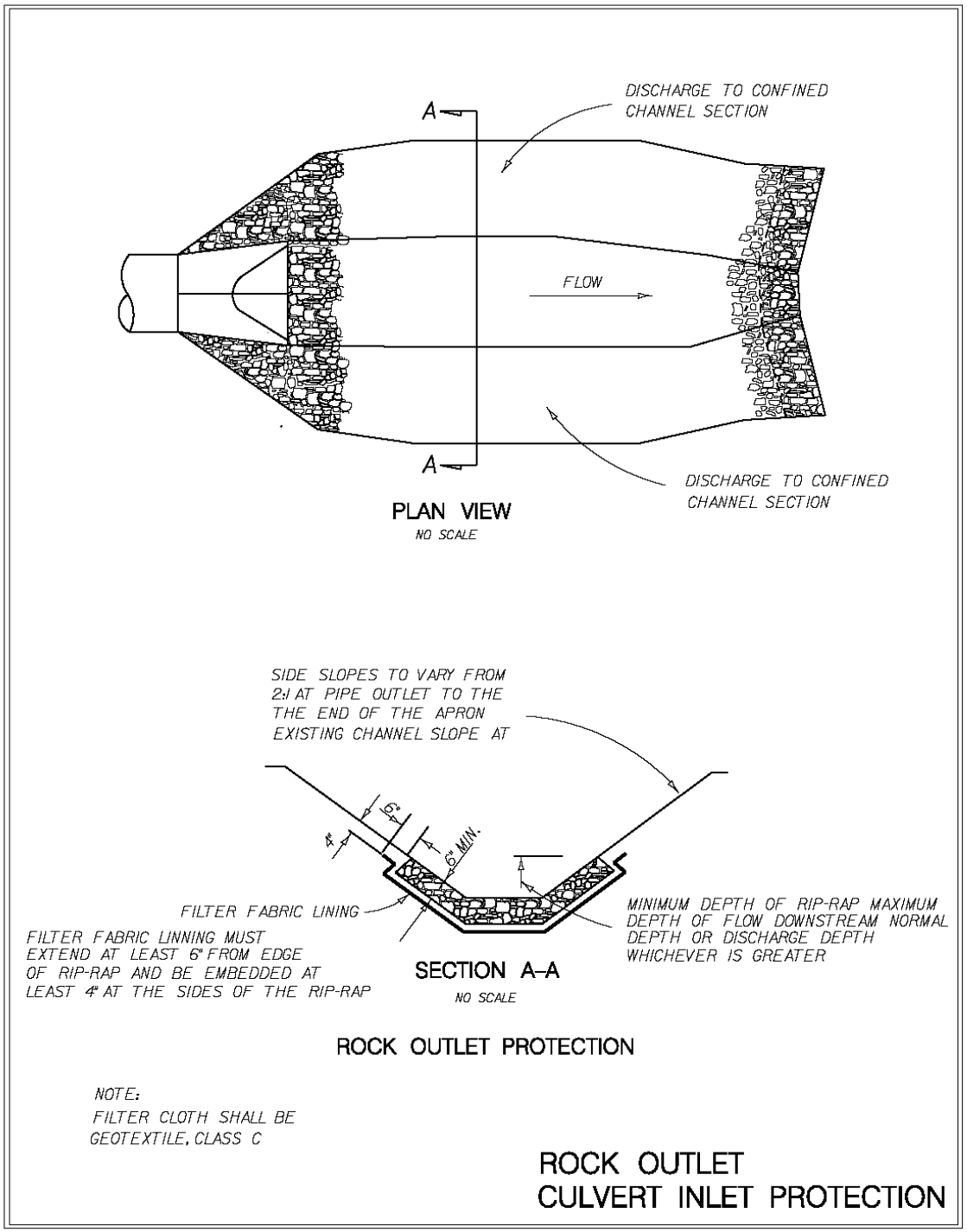

Figure 9-18: Outlet Protection

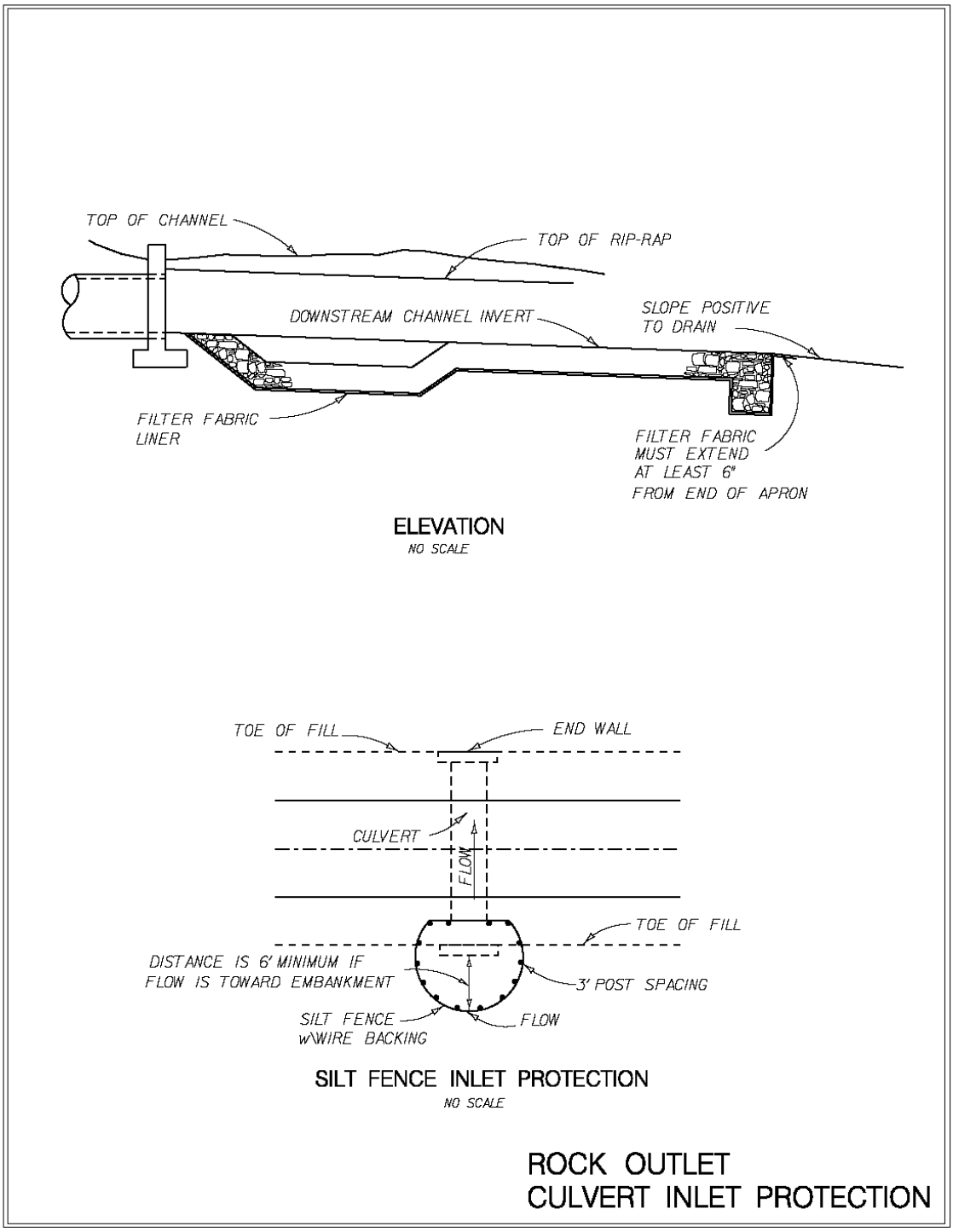

Figure 9-19: Rock Outlet Culvert Inlet Protection

9.5.9 Scour Protection Mat

Scour Protection Mat combines vegetation with modern structural measures to mechanically protect the soil from scour and erosion until the shear forces have dissipated.

Design Detailing

- Prepare the area downstream of the outlet
- Create an area as wide and level as possible.
- Remove any saturated soils, hard clods, and replace with fertile and workable soils.
- Do not fill in low areas where it can be easily eroded. Compact the soil to enable a proper seed bed.
- Level the discharge area to minimize the potential of water concentrating in one area.
- Grade the soil to the final elevation and level to the floor elevation.
- Grade and level the discharge channel within the construction limits.
- Avoid impact and waterfall erosion.
- The bottom of the channel should be at least the width of the outlet. When using pipe it is recommended to have the channel width 5 times the diameter, with a minimum of 3 times the diameter.
- Install sod perpendicular to the flow. Install sod up the sides of the channel to half the height of the outlet and at least twice the distance of the transition mat.
- Use TRMs only in low flow, low volume outlets.
- If install TRM, sod must be mowed or trimmed to less that 2 inches.
- Install TRM perpendicular to the flow, instal in a stair step fashion.
- Center the mat layout with the discharge point and parallel to the flow direction.
- Anchor Installation:
    a. Install at least 5 anchors per mat, 3-2-3 configuration.
    b. Thread plastic cable through mat. Do not cut cable until the desired anchor depth has been achieved.
    c. Drive the anchors at least 12 inches or as deep as necessary to achieve effective anchoring.
    d. Cut the cable approximately 6 inches above mat
    e. Install the plastic washer and a one-way stop over the washer, pull the cable backward while pushing down on the stop. This will create a snug fit.

Maintenance

No formal maintenance is required once vegetation has been established.

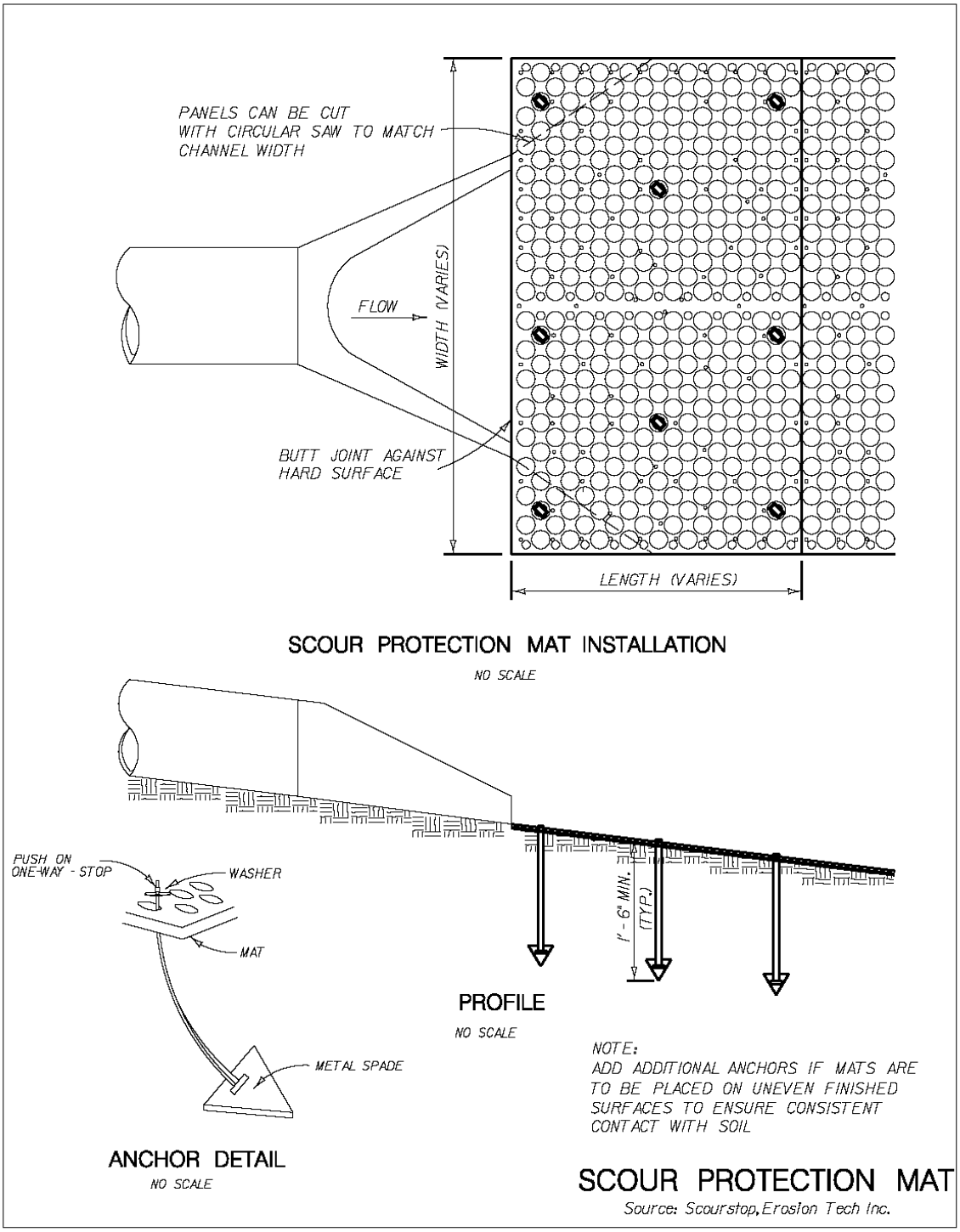

Figure 9-20: Scour Protection Mat

9.5.10 Diversions

A diversion is a channel constructed across a slope with a supporting ridge on the lower side for the purpose of reducing the slope length and intercepting and diverting stormwater runoff to stabilized outlets at non-erosive velocities. Diversions are used where:

- runoff from higher areas may damage property, cause erosion, or interfere with the establishment of vegetation on lower areas;
- surface and/or shallow subsurface flow is damaging upland slopes; or
- slope length needs reduction to minimize soil loss.

Figure 9-21 and 9-22 illustrate the use of diversions.

Design Detailing

- In most instances, diversions are constructed using a standard design or sized for site flow conditions.
- Location - Diversion location should be determined by considering outlet conditions, topography, land use, soil type, length of slope, seepage planes (where seepage is a problem) and the development layout.
- Capacity - The diversion channel must have a minimum capacity to carry the runoff expected from a minimum of 2-year frequency storm with a freeboard of at least 0.3 foot. Diversions designed to protect homes, schools, industrial buildings, roads, parking lots and comparable high-risk areas and those designed to function in connection with other structures must have sufficient capacity to carry peak runoff expected from a storm frequency consistent with the hazard involved.
- Channel Design - The diversion channel may be parabolic, trapezoidal or V-shaped.
- Ridge Design - The supporting ridge cross-section must meet the following criteria:
  - The side slopes must be no steeper than (2H:1V).
  - The width at the design water elevation must be a minimum of 4 feet.
  - The minimum freeboard shall be 0.3 feet-

Construction Guidelines

- Outlet - Diversions must have adequate outlets which will convey concentrated runoff without erosion.
- Stabilization - Unless otherwise stabilized, the ridge and channel must be seeded and mulched within 15 days of installation. Disturbed areas draining into the diversion must be seeded and mulched prior to or at the same time the diversion is constructed.
- All trees, brush, stumps, obstructions and other objectionable material must be removed and disposed of so as not to interfere with the proper functioning of the diversion.
- The diversion shall be excavated or shaped to line, grade and cross-section as required to meet the criteria specified, and be free of irregularities which will impede flow.
- Fills shall be compacted as needed to prevent unequal settlement that would cause damage in the completed diversion.
- All earth removed and not needed in construction shall be spread or disposed of so that it will not interfere with the functioning of the diversion.
- Permanent stabilization of disturbed areas must be done in accordance with the applicable standards and specification.

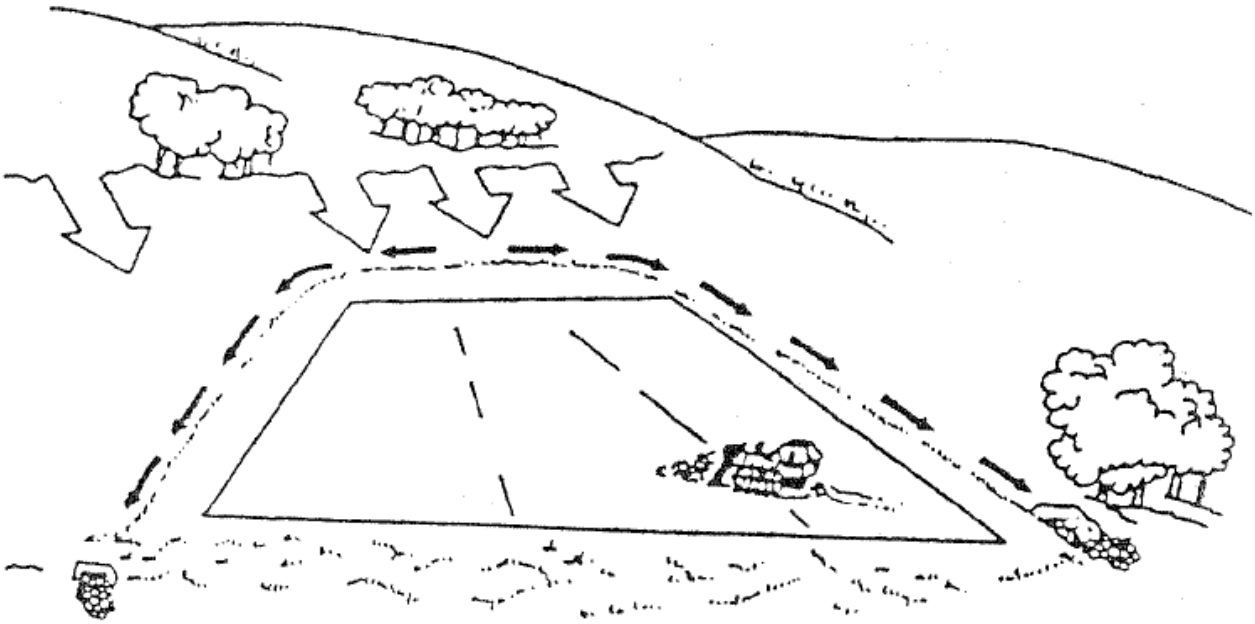

Figure 9-21: Use Of Perimeter Dikes As Diversions

Source: North Carolina Erosion And Sediment Control Manual, 1988.

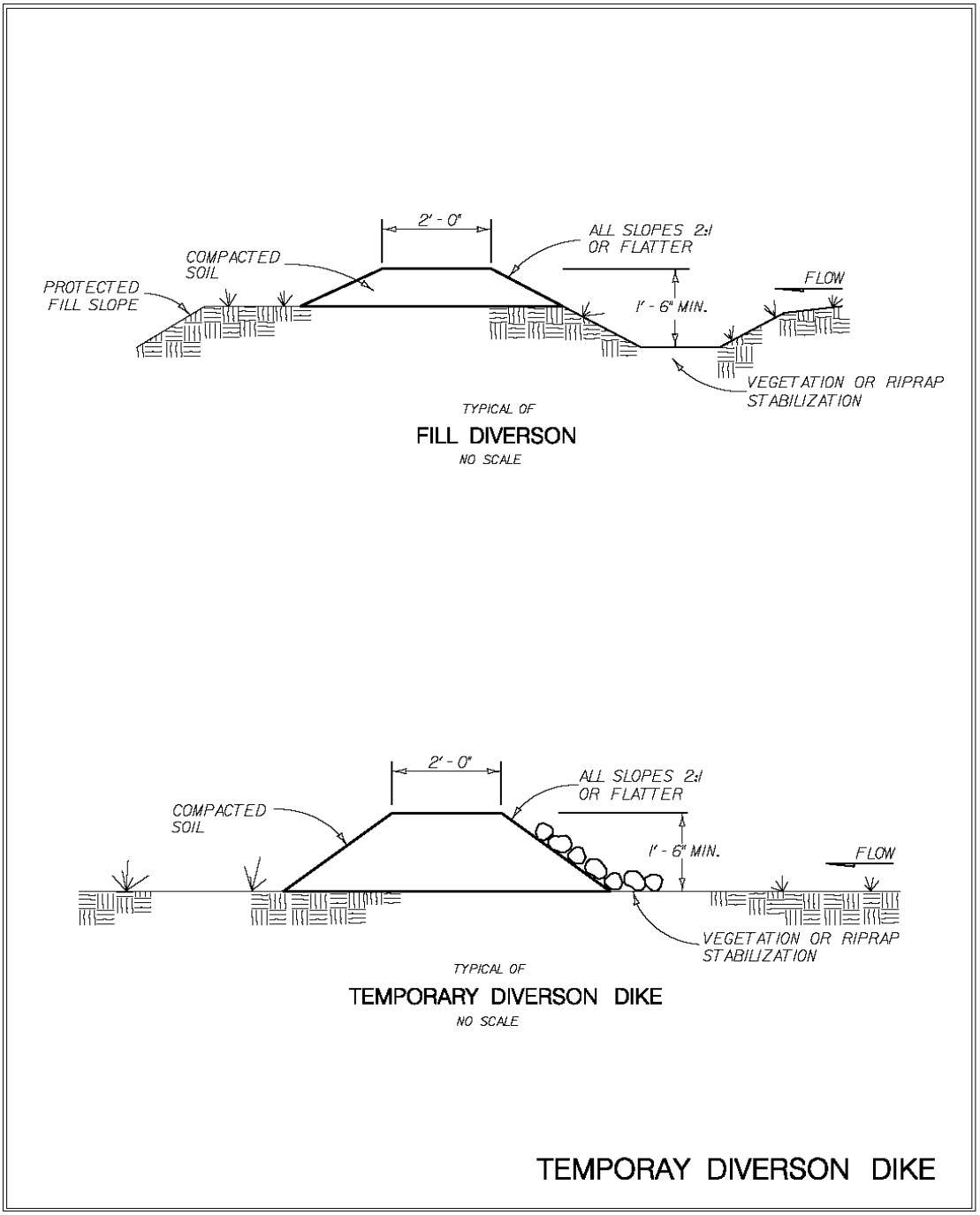

Figure 9-22: Temporary Diversion Dike

9.5.11 Check Dams

Check dams are small temporary dams constructed across a swale or drainage ditch for the purpose of reducing the velocity of concentrated stormwater flows, thereby reducing erosion of the swale or ditch. Check dams also trap small amounts of sediment generated in the ditch itself; however, these are not sediment trapping practices and should not be used as such. Figures 9-23 through 9-25 illustrates various examples of check dams.

Some specific applications include the following:

- Temporary ditches or swales which, because of their short length of service, cannot receive a non-erodible lining but still need some protection to reduce erosion.
- Permanent ditches or swales which for some reason cannot receive a permanent non-erodible lining for an extended period of time.
- Temporary or permanent ditches or swales which need protection during the establishment of grass linings

Use Limitations

- Use limited to small open channels which drain 10 acres or less.
- Should not be used in an active stream.
- Should not to be used where high flows or high velocities are expected.
- In locating the check dam, consideration should be given to the effects and the reach of the impounded water and sediment.
- Storm flows across a deteriorated check dam can result in the loss of the structure and the washout of the accumulated sediment.

Design Detailing

- The drainage area of the ditch or swale being protected should not exceed 10 acres. The maximum height of the check dam should be in accordance with Figure 9-23. The center of the check dam must be at least 6 inches lower than the outer edges. If used in combination, the maximum spacing between the dams should be such that the toe of the upstream dam is at the same elevation as the top of the downstream dam

Construction Guidelines

- Stone check dams should be constructed of 2- to 3-inch stone. Hand or mechanical placement will be necessary to achieve complete coverage of the ditch or swale and to insure that the center of the dam is lower than the edges.
- Log check dams may be constructed of 4- to 6-inch logs salvaged from clearing operations on site, if possible. The logs should be embedded into the soil at least 18 inches. The 6-inch lower height required at the center can be achieved either by careful placement of the logs or by cutting the logs after they are in place.
- Logs and/or brush should be placed on the downstream side of the dam to prevent scour during high flows.
- Sediment Removal - Although this practice is not intended to be used primarily for sediment trapping, some sediment will accumulate behind the check dams. Sediment should be removed from behind the check dams when it has accumulated to one half of the original height of the dam.
- Removal - Check dams should be removed when their useful life has been completed. In temporary ditches and swales, check dams should be removed and the ditch filled in when they are no longer needed. In permanent structures, check dams should be removed when a permanent lining can be installed. In the case of grass-lined ditches, check dams should be removed when the grass has matured sufficiently to protect the ditch or swale. The area beneath the check dams should be seeded and mulched immediately after they are removed.

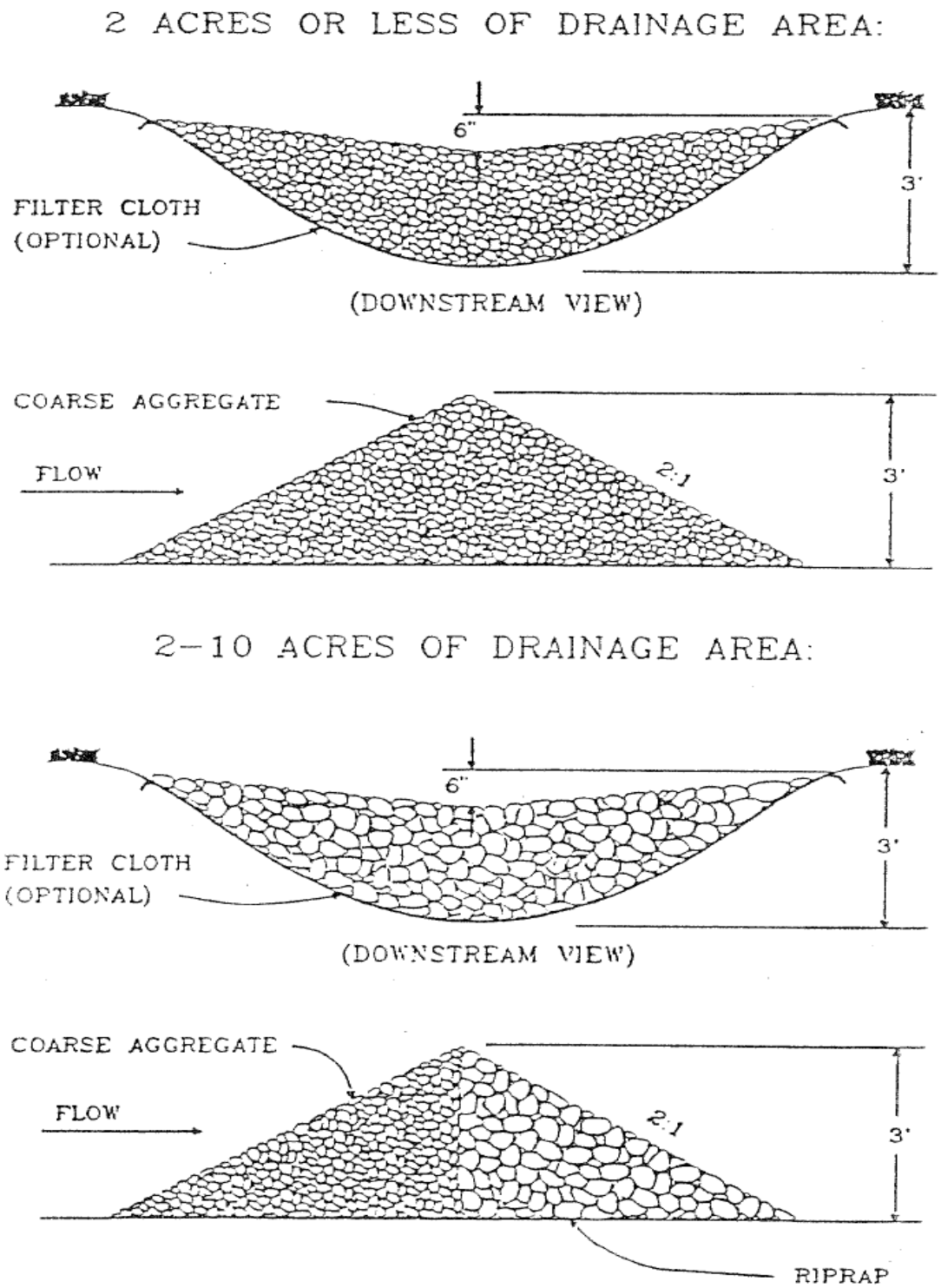

Figure 9-23: Rock Check Dams

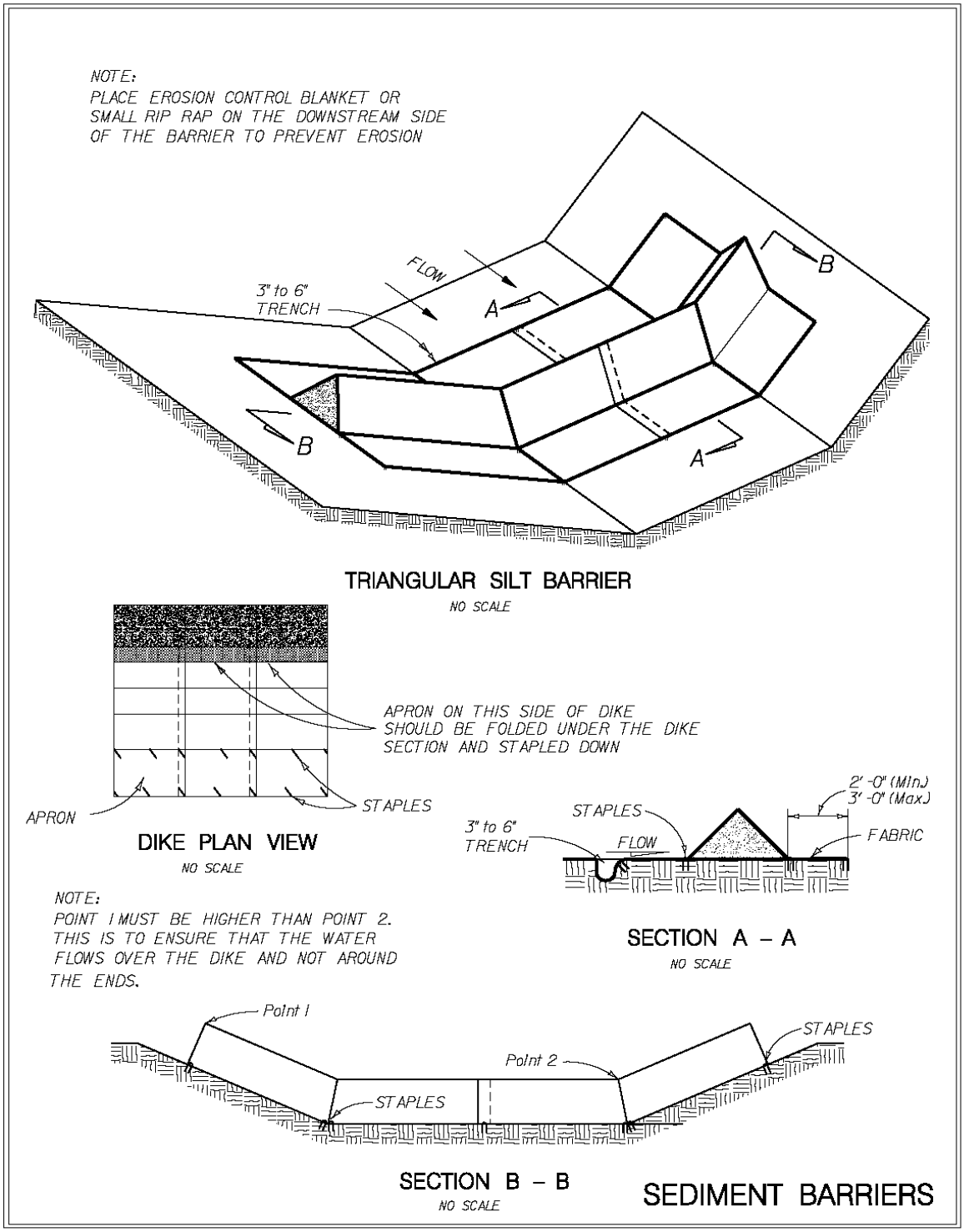

Figure 9-24: Triangular Sediment Barrier

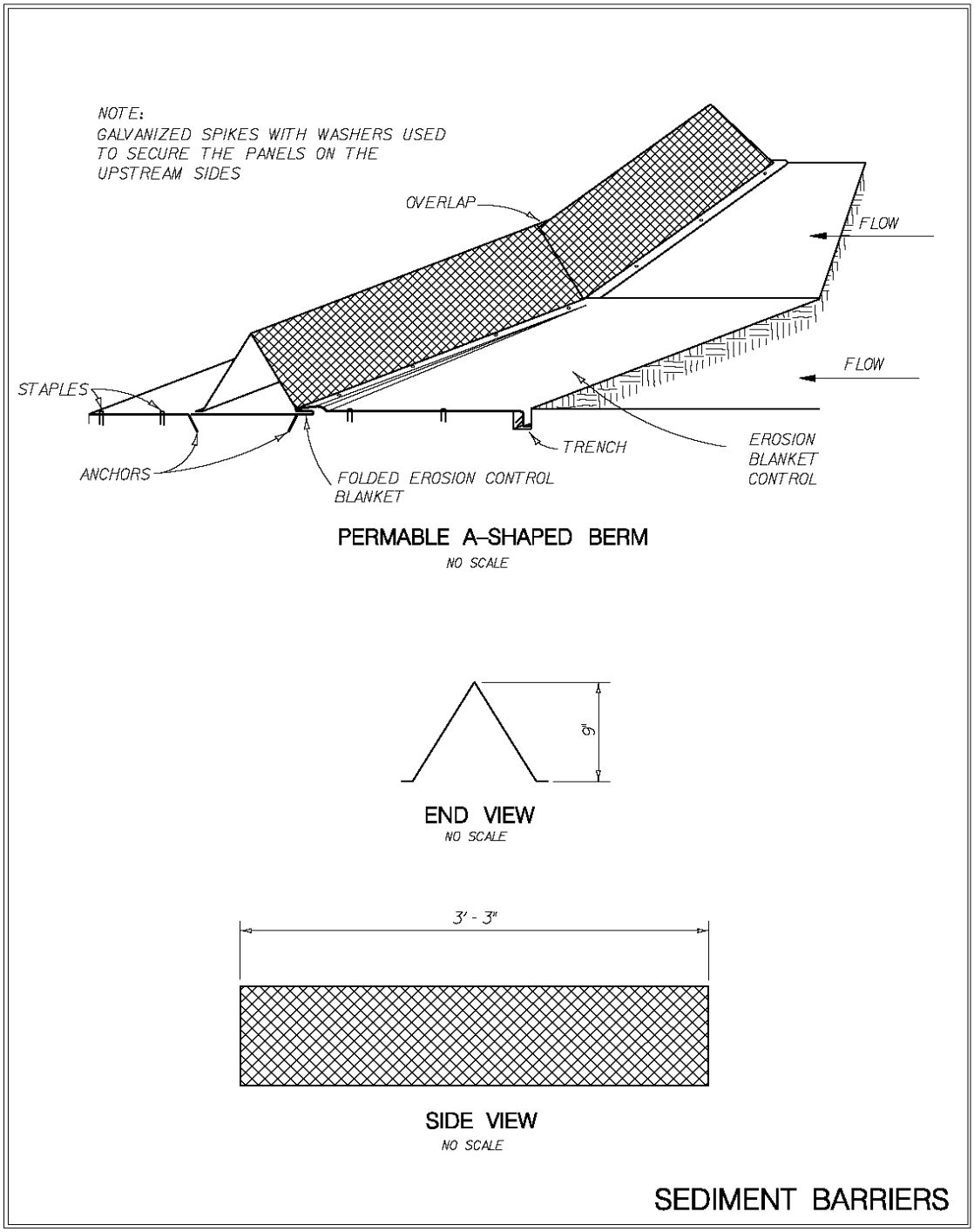

Figure 9-25: Permeable A-Shaped Berm

9.5.12 Construction Entrance

A construction entrance is a stabilized stone pad with a filter fabric underliner located at any point where vehicular traffic will be entering or leaving a construction site to or from a public right-of-way, street, alley, sidewalk or parking area. Its purpose is to reduce or eliminate the tracking of sediment onto public rights-of-way or streets. It should be used wherever traffic will be leaving a construction site and move directly onto a public road or other paved area. A construction entrance schematic is shown in Figure 9-26.

Design Detailing

Aggregate Size: Use 2 to 3 1/2-inch stone, or reclaimed or recycled concrete equivalent.
Thickness: Not less than 6 inches.
Entrance Dimension: 12 foot minimum width and must extend the full width of the vehicular ingress and egress area. 24 foot minimum width if there is only one access to the site. Length must be as required but not less than 70 feet. All sediment must be prevented from entering storm drains, ditches, or watercourses.
Filter Cloth: To be placed on the entire area to be covered with aggregate. The filter cloth shall be woven or non-woven fabric, inert to commonly encountered chemicals, hydro-carbons, mildew, rot-resistant, and conform as a minimum to the fabric properties shown in Table 9-3:

Table 9-3 Properties of Filter Cloth

Fabric Properties[1]	Light Duty Entrance[2]	Heavy Duty Entrance[3]	Test Method
Grab Tensile Strength (lbs.)	180	250	ASTM D4632
Elongation @ Failure (%)	50	60	ASTM D4632
Mullen Burst Strength (psi)	250	380	ASTM D3786
Puncture Strength (lbs.)	90	125	ASTM D4833
Apparent Opening Size (mm)	.20	.20	ASTM D4751
Aggregate Depth (in.)	6	10	ASTM D4751

[1] Fabrics not meeting these specifications may be used only when design procedure and supporting documentation are supplied to determine aggregate depth and fabric strength.
[2] Light Duty Entrance shall be defined as sites that have been graded to subgrade and where most travel would be single axle vehicles and an occasional multi-axle truck. Examples of fabrics which can be used are: Trevira Spunbond 1125, Synthetic Industries 701, Polyfelt TS650, or equivalent.
[3] Heavy Duty Entrance shall be defined as sites with only rough grading and where most travel would be multi-axle vehicles. Examples of fabrics which can be used are: Trevira Spunbond 1135, Synthetic Industries 1001, Polyfelt TS750 or equivalent.

Construction Guidelines

1. The area of the entrance must be excavated a minimum of 3 inches and must be cleared of all vegetation, roots, and other objectionable material. The filter fabric underliner will then be placed the full width and length of the entrance.

2. Following the installation of the filter cloth, the stone shall be placed to the specified dimensions. If wash racks are used, they must be installed according to the manufacturer's specifications. Any drainage facilities required because of the washing shall be constructed according to specifications.

3. All surface water flowing or diverted towards construction entrances must be piped across the entrance. If piping is impractical, a mountable berm with 5:1 slopes will be permitted.

4. When washing is required, it must be done on a area stabilized with stone and which drains into an approved sediment trapping device.

Maintenance

1. The entrance must be maintained in a condition which will prevent tracking or flow of sediment onto public rights-of-way. This may require periodic top dressing with additional stone or the washing and reworking of existing stone as conditions demand and repair and/or cleanout of any structures used to trap sediment. All materials spilled, dropped, washed, or tracked from vehicles onto roadways or into storm drains must be removed immediately. The use of water trucks to remove materials dropped, washed, or tracked onto roadways will not be permitted under any circumstances.

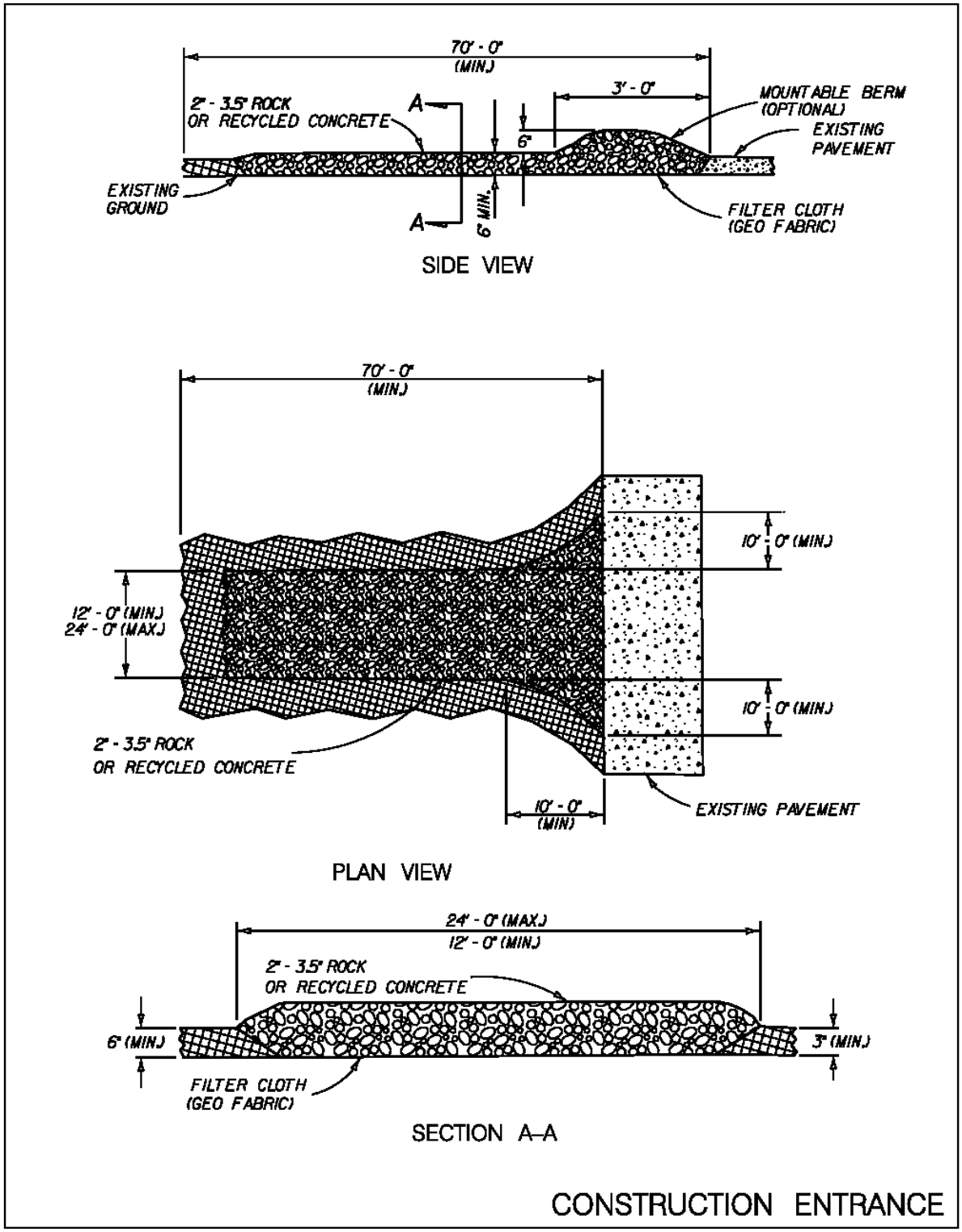

Figure 9-26: Stone Construction Entrance

9.5.13 Temporary Culvert Stream Crossing

A temporary vehicular stream crossing is a temporary structural span installed across a flowing watercourse for use by construction traffic. Structures may include bridges, round pipes, pipe arches, or oval pipes. Its purpose is to provide a means for construction traffic to cross flowing streams without damaging the channel or banks and to keep sediment generated by construction traffic out of the watercourse.

It is generally applicable to flowing streams with drainage areas less than 1 square mile. Structures which must handle flow from larger drainage areas should be designed by methods which more accurately define the actual hydrologic and hydraulic parameters which will affect the functioning of the structure.

Temporary culvert crossings are presented in Figure 9-27.

Design Detailing

1. Where culverts are installed, 2" coarse aggregate or larger will be used to form the crossing. The depth of stone cover over the culvert shall be equal to one half the diameter of the culvert or 12 inches, whichever is greater. To protect the sides of the stone from erosion, riprap shall be used.
2. If the structure will remain in place for up to 14 days, the culvert must be large enough to convey the flow from a 2-year frequency storm without appreciably altering the stream flow characteristics. See Table 9-3 for aid in selecting an appropriate culvert size. If the structure will remain in place 14 days to one year, the culvert must be large enough to convey the flow from a 10-year frequency storm. In this case, the hydrologic calculation and subsequent culvert size must be done for the specific watershed characteristics. If the structure must remain in place over 1 year, it must be designed as a permanent measure by a qualified professional.
3. Multiple culverts may be used in place of one large culvert if they have the equivalent capacity of the larger one. The minimum sized culvert that may be used is 18 inches.
4. All culverts must be strong enough to support the maximum expected load.
5. The length of the culvert must be adequate to extend the full width of the crossing, including side slopes.
6. The slope of the culvert must be at least 0.25 inches per foot.

Construction Guidelines

1. Clearing and excavation of the stream bed and banks shall be kept to a minimum.
2. The invert elevation of the culvert must be installed on the natural streambed grade.
3. Filter cloth shall be placed on the streambed and streambanks prior to placement of the pipe culvert(s) and aggregate. The filter cloth shall cover the streambed and extend a minimum of six inches and a maximum of one foot beyond the end of the culvert and bedding material. Filter cloth reduces settlement and improves crossing stability.
4. The culvert(s) must extend a minimum of one foot beyond the upstream and downstream toe of the aggregate placed around the culvert. In no case shall the culvert exceed 40 feet in length.
5. The culvert(s) must be covered with a minimum of one foot of aggregate. If multiple culverts are used, they must be separated by at least 12 inches of compacted aggregate fill. At a minimum, the bedding and fill material used in the construction of the temporary access culvert crossings must be 2" coarse aggregate.
6. When the crossing has served its purpose, all structures including culverts, bedding and filter cloth materials will be removed. Removal of the structure and clean-up of the area shall be accomplished without construction equipment working in the waterway channel.
7. Upon removal of the structure, the stream must immediately be shaped to its original cross-section and properly stabilized.

Maintenance

Structures must be inspected after every rainfall and at least once a week, whether it has rained or not, and all damages repaired immediately.

PIPE DIAMETER (INCHES) FOR STREAM CROSSINGS[a]				
Drainage Ares (Acres)	Average Slope of Watershed			
	1%	4%	8%	16%
1 - 25	24	24	30	30
26 - 50	24	30	36	36
51 - 100	30	36	42	48
101 - 150	30	42	48	48
151 - 200	36	42	48	54
301 - 350	42	48	60	60
351 - 400	42	54	60	60
451 - 500	42	54	60	72
501 - 550	48	60	60	72
551 - 600	48	60	60	72
601- 640	48	60	72	72

[a]Note: Table is based on USDA-SCS Graphical Peak Discharge Method for 2-year frequency storm event, CN = 65; Rainfall depth = 3.5 inches

Table 9-4: Pipe Diameter (Inches) For Stream Crossing

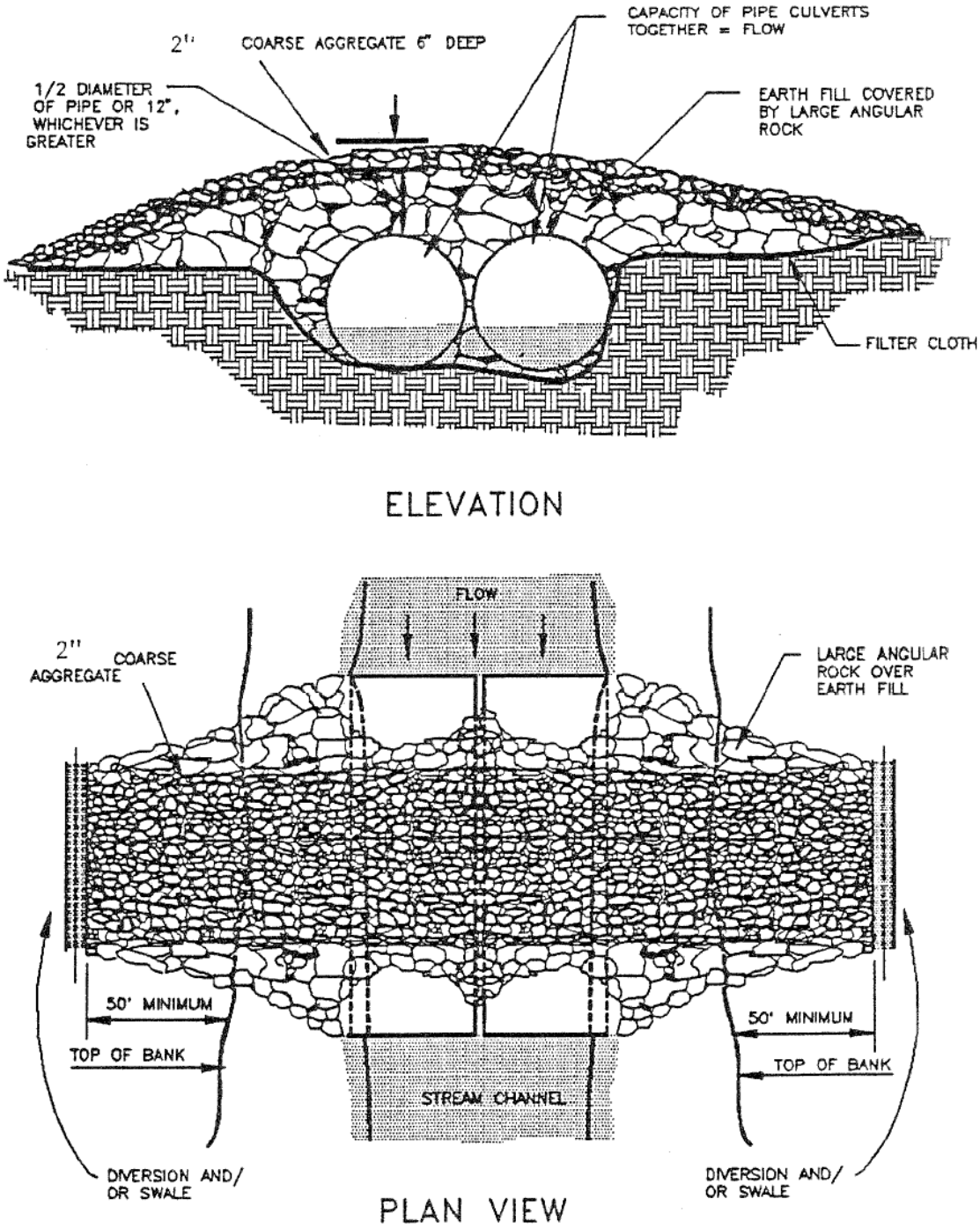

Figure 9-27: Temporary Culvert Crossing

9.5.14 Temporary Sediment Trap

A temporary sediment trap is a temporary ponding area formed by constructing an earthen embankment with a stone outlet. Its purpose is to detain sediment-laden runoff from small disturbed areas long enough to allow the majority of the sediment to settle out. It should be used below disturbed areas where the total contributing area is less than 3 acres and where the sediment trap will be used no longer than 18 months.

Figure 9-28 shows a temporary sediment trap.

Design Details

- Sediment traps should be used only for small drainage areas. If the contributing drainage area is 3 acres or greater, use a temporary sediment basin.
- Sediment traps, along with other perimeter controls intended to trap sediment, must be constructed as a first step in any land-disturbing activity and must be made functional before upslope land disturbance takes place.
- The sediment trap must have an initial storage volume of 134 cubic yards per acre of drainage area, half of which shall be in the form of a permanent pool or wet storage to provide a stable settling medium. The remaining half shall be in the form of a drawdown or dry storage which will provide extended settling time during less frequent, larger storm events. The volume of the wet storage shall be measured from the low point of the excavated area to the base of the stone outlet structure. The volume of the dry storage shall be measured from the base of the stone outlet to the crest of the stone outlet. Sediment must be removed from the basin when the volume of the wet storage is reduced by one-half.

  a. For a sediment trap, the wet storage volume may be approximated as follows:

     $V_1 = 0.85 \times A_1 \times D_1$ where

     $V_1 =$ The wet storage volume in cubic feet.

     $A_1 =$ The surface area of the flooded area at the base of the stone outlet in square feet.

     $D_1 =$ The maximum depth in feet, measured from the low point in the trap to the base of the stone outlet.

  b. For a sediment trap, the dry storage volume may be approximated as follows:

     $V_2 = (A_1 + A_2) / 2 \times D_2$ where

     $V_2 =$ The dry storage volume in cubic feet.

     $A_1 =$ The surface area of the flooded area at the base of the stone outlet in square feet.

     $A_2 =$ The surface area of the flooded area at the crest of the stone outlet in square feet.

     $D_2 =$ The depth in feet, measured from the base of the stone outlet to the crest of the stone outlet.

- The designer should seek to provide a storage area which has a minimum 2:1 length to width ratio (measured from point of maximum runoff introduction to outlet (See Table 9-5).
- Side slopes of excavated areas should be no steeper than 1:1. The maximum depth of excavation within the wet storage area should be 4 feet to facilitate clean-out and for site safety considerations.
- The outlet for the sediment trap shall consist of a stone section of the embankment located at the low point in the basin. A combination of coarse aggregate and riprap shall be used to provide for filtering/detention, as well as outlet stability. The coarse aggregate shall be 3/4 - 1-1/2 inch clean stone (smaller stone sizes will enhance filter efficiency) and riprap shall be NDOR specifications Type A or B filter cloth. Riprap protection shall be placed at the stone-soil interface to act as a "separator". The minimum length of the outlet must be 6 feet times the number of acres comprising the total area draining to the trap. The crest of the stone outlet must be at least 1 foot below the top of the embankment to ensure that the flow will travel over the stone and not the embankment.
- The maximum height of the sediment trap embankment must be 5 feet as measured from the base of the stone

outlet. Minimum top widths (W) and outlet heights (H_o) for various embankment heights (H) are shown on the accompanying diagram. Side slopes for the embankment must be 2:1 or flatter.

- Sediment traps must be removed after the contributing drainage area is stabilized. Plans should show how the site of the sediment trap is to be graded and stabilized after removal.

Construction Guidelines

- The area under the embankment shall be cleared, grubbed and stripped of any vegetation and root mat.
- Fill material for the embankment must be free of roots or other woody vegetation, organic material, large stones, and other objectionable material. The embankment should be compacted in 6 inch layers by traversing with construction equipment.
- The earthen embankment must be seeded with temporary or permanent vegetation immediately after installation.
- Construction operations must be carried out in such a manner that erosion and water pollution are minimized.
- The structure will be removed and the area stabilized when the upslope drainage area has been stabilized.
- All cut and fill slopes must be 2:1 or flatter (except for the excavated wet storage area which may be at a maximum 1:1 grade).

Maintenance

- Sediment must be removed and the trap restored to its original dimensions when the sediment has accumulated to one half the design volume of the wet storage. Sediment removal from the basin must be deposited in a suitable area and in such a manner that it will not erode and cause sedimentation problems.
- Filter stone shall be regularly checked to ensure that filtration performance is maintained. Stone choked with sediment must be removed and cleaned or replaced.
- The structure should be checked regularly to ensure that it is structurally sound and has not been damaged by erosion or construction equipment. The height of the stone outlet should be checked to ensure that its center is at least 1 foot below the top of the embankment.

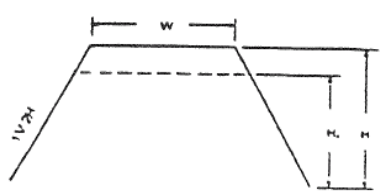

H	H_o	W
1.5	0.5	2.0
2.0	1.0	2.0
2.5	1.5	2.5
3.0	2.0	2.5
3.5	2.5	3.0
4.0	3.0	3.0
4.5	3.5	4.0
5.0	4.0	4.5

Table 9-5 Minimum Top Width (W) Required For Sediment Trap Embankments According To Height Of Embankment (Feet)

Source: Modified From Virginia Erosion & Sediment Control Handbook, 1980

TEMPORARY SEDIMENT TRAP

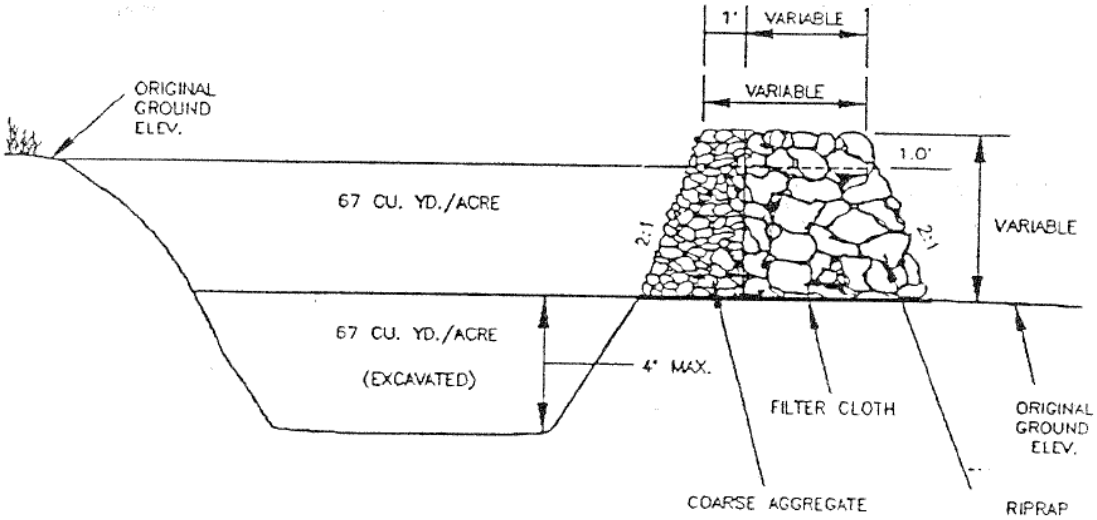

CROSS SECTION OF OUTLET

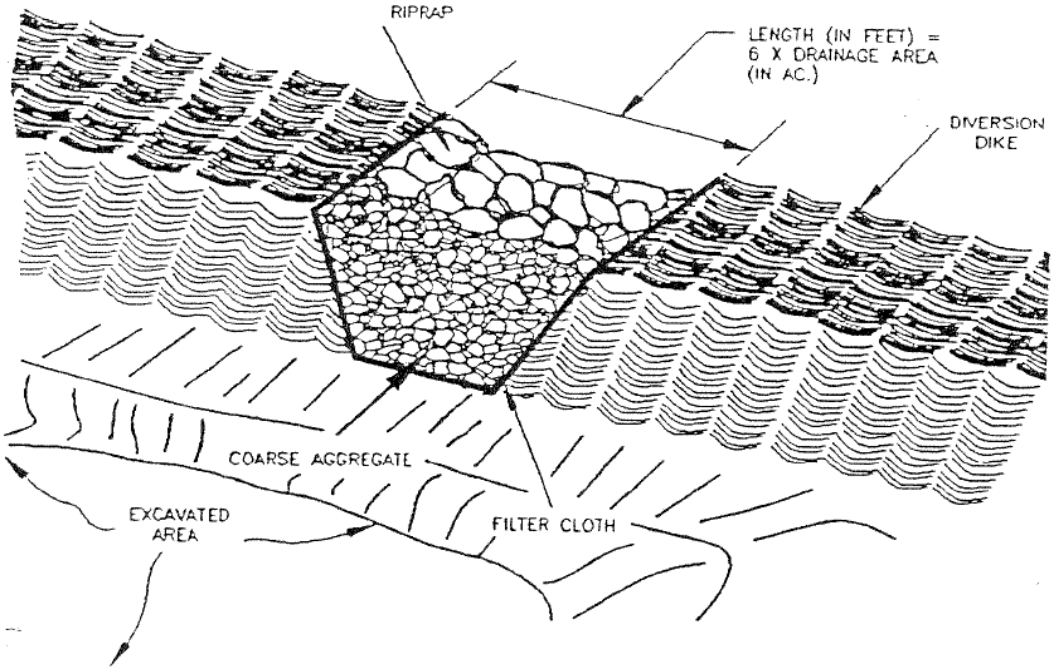

OUTLET (PERSPECTIVE VIEW)

Figure 9-28: Temporary Sediment Trap

9.5.15 Temporary Sediment Basin

Temporary sediment basins are storage areas provided to detain sediment-laden runoff from disturbed areas long enough for the majority of the sediment to settle out. The facility is a temporary basin with a controlled stormwater release structure, formed by constructing an embankment of compacted soil across a drainageway.

Use Limitations

- Drainage Area and Topography - Temporary sediment basins can be used below disturbed areas generally greater than 5 acres. Sufficient space and appropriate topography for the construction of a temporary impoundment are necessary.
- Longevity - These structures are limited to a useful life of 18 months unless they are designed as permanent ponds by a qualified professional engineer.
- Effectiveness - Sediment basins are at best only 70-80% effective in trapping sediment which flows into them. Therefore, they should be used in conjunction with erosion control practices such as temporary seeding, mulching, diversion dikes, etc., to reduce the amount of sediment flowing into the basin.
- Location - To improve the effectiveness of the basin, it should be located to intercept the largest possible amount of runoff from the disturbed area. The best locations are generally low areas and natural drainageways below disturbed areas. Drainage into the basin can be improved by the use of diversion dikes and ditches. The basin must not be located in a live stream but should be located to trap sediment-laden runoff before it enters the stream. The basin should not be located where its failure would result in the loss of life or interruption of use of public utilities or roads.
- Multiple Use - Sediment basins may be designed as permanent structures to remain in place after construction is completed. Wherever these structures are to become permanent, or if they exceed the size limitations of the design criteria, they must be designed as permanent ponds by a qualified professional engineer.

Design Detailing

- Maximum Drainage Area - Unless the structure is designed as a permanent pond by a professional engineer, the maximum allowable drainage area into the basin shall be 150 acres.
- Maximum storage volume and embankment height - Refer to Department of Water Resources regulations.
- Basin Capacity - The design capacity of the basin must be at least 134 cubic yards per acre of drainage area, measured from the bottom of the basin to the crest of the principal spillway (riser pipe). Sediment should be removed from the basin when the volume of the basin has been reduced to 67 cubic yards per acre of drainage area. In no case shall the sediment cleanout level be higher than 1 foot below the top of the riser. The elevation of the sediment cleanout level should be calculated and clearly marked on the riser. A series of small basins has proven to be more effective in some instances than one large basin and may be better adaptable to a particular site.
- Basin Surface Area - Sediment trapping efficiency is primarily a function of sediment particle size and the ratio of basin surface area to inflow rate. Therefore, design the basin to have a large surface area for its volume.
- Design Life - Sediment basins with an expected life greater than 18 months must be designed as permanent structures. In these cases, the structure must be designed by a qualified professional engineer experienced in the design of dams.
- Basin Shape - To improve sediment trapping efficiency of the basin, the effective flow length must be twice the effective flow width. This basin shape may be attained by properly selecting the site of the basin, by excavation, or by the use of baffles.
- Embankment Cross-Section - The embankment must have a minimum top width of 8 feet. The side slopes must be 2H:1V or flatter. The embankment may have a maximum height of 10 feet if the side slopes are 2H:1V. If the side slopes are 2.5H:1V or flatter, the embankment may have a maximum height of 15 feet.
- Spillway design - The outlets for the basin may consist of a combination of principal and emergency spillways or a principal spillway alone. In either case, the outlet(s) must pass the peak runoff expected from the drainage area for a 10-year storm without damage to the embankment of the basin. Runoff computations must be based upon the soil cover conditions which are expected to prevail during the life of the basin. To increase the efficiency of the basin, the spillway(s) can be designed to maintain a permanent pool of water.
- Principal Spillway - The principal spillway must consist of a solid (non-perforated), vertical pipe or box of

corrugated metal or reinforced concrete joined by a watertight connection to a horizontal pipe (barrel) extending through the embankment and outletting beyond the downstream toe of the fill. If the principal spillway is used in conjunction with an emergency spillway, the principal spillway must have a minimum capacity of 0.2 cfs per acre of drainage area when the water surface is at the crest of the emergency spillway. If no emergency spillway is used, the principal spillway must be designed to pass the entire peak flow expected from a 10-year storm.

Design Elevations - If the principal spillway is used in conjunction with an emergency spillway, the crest of the principal spillway must be a minimum of 1 foot below the crest of the emergency spillway. If no emergency spillway is used, the crest of the principal spillway must be a minimum of 3 feet below the top of the embankment. In either case, a minimum freeboard of 1 foot must be provided between the design high water and the top of the embankment.

Anti-Vortex Device and Trash Rack - A trash rack must be attached to the top of the principal spillway to prevent floating debris from being carried out of the basin. An anti-vortex device should be considered to improve flow into the spillway.

Dewatering - As a minimum, provisions must be made to dewater the basin down to the sediment cleanout elevation. This can be accomplished by providing dewatering in the spillway structure. Dewatering holes must be no larger than 4 inches in diameter. A stone filter will be required around the spillway structure to prevent loss of stored sediment.

Base - The base of the principal spillway must be firmly anchored to prevent its floating. If the riser of the spillway is greater than 10 feet in height, computations must be done to determine the anchoring requirements. As a minimum, a factor of safety of 1.25 must be used (downward forces = 1.25 × upward forces).

Barrel - The barrel of the principal spillway, which extends through the embankment, must be designed to carry the flow provided by the riser of the principal spillway with the water level at the crest of the emergency spillway. The connection between the riser and the barrel must be watertight. The outlet of the barrel must be protected to prevent erosion or scour of downstream areas.

Anti-Seep Collars - If the pond is not provided with means for releasing the stored runoff between inflow storms, anti-seep collars must be used on the barrel of the principal spillway within the normal saturation zone of the embankment to increase the seepage length by at least 10%, if either of the following two conditions is met:

1. the settled height of the embankment exceeds 10 feet, or
2. the embankment has a low silt-clay content (Unified Soil Classes SM or GM).

Anti-seep collars must be installed within the saturated zone. The maximum spacing between collars must be 14 times the projection of the collar above the barrel. Collars must not be closer than 2 feet to a pipe joint. Collars should be placed sufficiently far apart to allow space for hauling and compacting equipment. Connections between the collars and the barrel must be watertight. Figure 9-29 illustrates anti-seep collars.

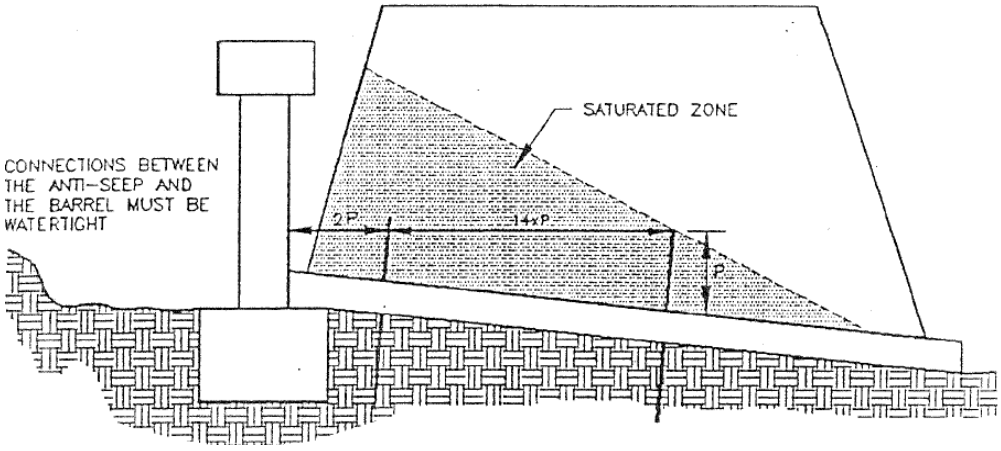

Figure 9-29: Anti-Seep Collars

Source: LPSNRD 1994.

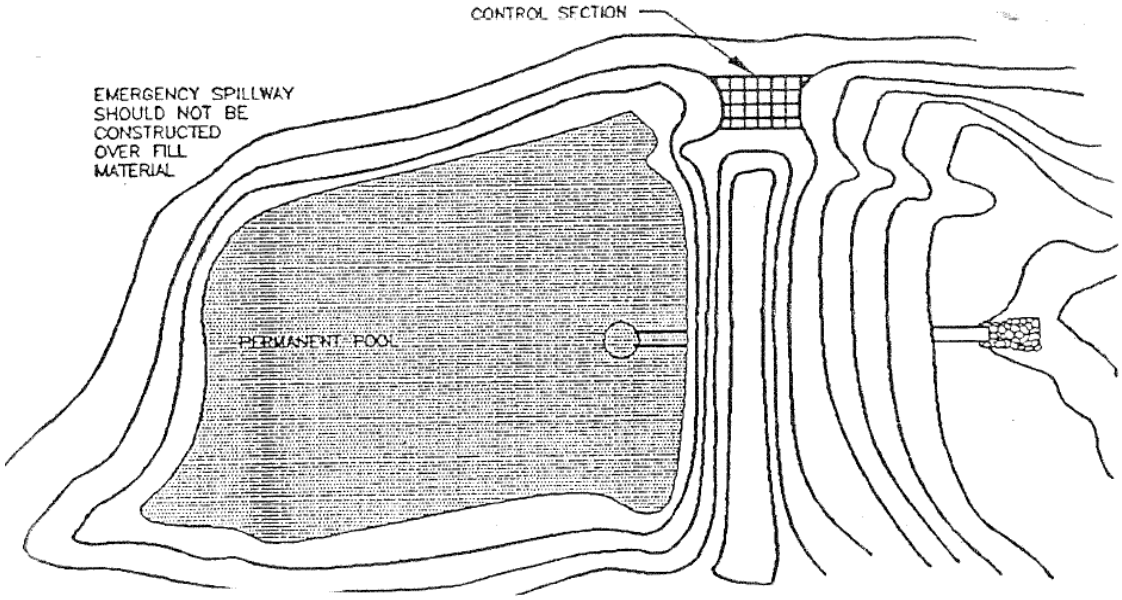

Figure 9-30: Emergency Spillway

Source: LPSNRD 1994.

- Emergency Spillway - The emergency spillway must consist of an open channel constructed adjacent to the embankment over undisturbed material (not fill). Figure 9-30 illustrates emergency spillways.

  Capacity - The emergency spillway must be designed to carry the peak rate of runoff expected from a 10-year storm, less any reduction due to the flow through the principal spillway.

  Design Elevations - The design high water through the emergency spillway must be at least 1 foot below the top of the embankment. The crest of the emergency spillway channel must be at least 1 foot above the crest of the principal spillway.

  Location - The channel must be located so as to avoid sharp turns or bends. The channel must return the flow of water to a defined channel downstream from the embankment.

  Maximum Velocities - The maximum allowable velocity in the emergency spillway channel will depend upon the type of lining used. See Chapter 5 for allowable velocities.

Construction Guidelines

- Site Preparation - Areas under the embankment and any structural works shall be cleared, grubbed and stripped of topsoil to remove trees, vegetation, roots, or other objectionable material. In order to facilitate cleanout and restoration, the pool area (measured at the top of the principal spillway) will be cleared of all brush and trees.
- Cutoff Trench - When a cutoff trench is specified it shall be excavated along the centerline of the dam. The minimum depth shall be 2 feet. The cutoff trench must extend up both abutments to the riser crest elevation. The minimum bottom width shall be 4 feet, but wide enough to permit operation of compaction equipment. The side slopes must be no steeper than 1H:1V. Compaction requirements shall be the same as those for the roadway embankment. The trench shall be drained during the backfilling-compacting operations.
- Principal Spillway - The riser of the principal spillway must be securely attached to the barrel by a watertight connection. The barrel and riser must be placed on a firm compacted soil foundation. The base of the riser shall be firmly anchored according to design criteria to prevent its floating. Pervious materials such as sand, gravel or crushed stone must not be used as backfill around the barrel or anti-seep collars. Fill material must be placed around the pipe in 4-inch layers and compacted by hand at least to the same density as the embankment. A minimum of 2 feet of fill must be hand-compacted over the barrel before crossing it with construction equipment.
- Emergency Spillway - Design elevations, widths, entrance and exit channel slopes are critical to the successful operation of the spillway and should be adhered to closely during construction.
- Embankment - The fill material shall be taken from approved borrow areas. It must be clean mineral soil, free of roots, woody vegetation, oversized stones, rocks, or other objectionable material. Areas on which fill is to be placed must be scarified prior to the placement of fill. Fill material will be placed in 6- to 8-inch continuous layers over the entire length of the fill. Compaction shall be obtained by routing the hauling equipment over the fill so that the entire surface of the fill is traversed by at least one wheel or tread track of the equipment, or by using a compactor.
- Vegetative Stabilization - The embankment and emergency spillway of the sediment basin must be stabilized with temporary vegetation.
- Erosion and Sediment Control - The construction of the sediment basin shall be carried out in a manner such that it does not result in any undue sediment problems downstream.
- Safety - All state and local requirements must be met concerning fencing and signs warning the public of the hazards of soft sediment and flood waters.

Note: For a detailed discussion of design procedures and specifications for temporary sediment basins, see LPSNRD, 1994.

9.5.16 Temporary Seeding

Temporary seeding is the establishment of a temporary vegetative cover on disturbed areas by seeding with appropriate rapidly growing annual or perennial plants. Its purpose is to reduce erosion and sedimentation by stabilizing disturbed areas that will not be brought to final grade for a period of thirty days or more, reduce damage from sediment and runoff to downstream or off-site areas, and to provide protection to bare soils exposed during construction until permanent vegetation or other erosion control measures can be established.

It should be used on exposed soil surfaces. Such areas include denuded areas, soil stockpiles, dikes, dams, sides of sediment basins, temporary roadbanks, etc. A permanent vegetative cover must be applied to areas that will be left dormant for a period of more than 1 year.

Construction Guidelines

1. Prior to seeding, install all necessary erosion control practices such as dikes, waterways, and basins.

2. Provide proper shaping of the area to be seeded in a manner such that seedbed preparation and seeding operations can be carried out.

3. Seedbed Preparation:
   a. If the area has been recently loosened or disturbed, no further roughening is required. When the area is compacted, crusted or hardened, the soil surface shall be loosened by discing, raking, harrowing, or other acceptable means. Seedbed preparation should not be undertaken when excessively wet conditions exist. Seedbed shall be prepared to a depth of approximately 3 inches.
   b. If the soil being seeded is fertile topsoil, fertilizer is not required. However, if subsoil is to be seeded, it will most likely be deficient in nutrients required for seed germination and growth. 450 lbs./acre of 10-20-20 fertilizer should be used, and it is essential that this fertilizer be incorporated into the top 2-4 inches of soil during seedbed preparation. Soils which are highly acidic should be limed.

4. Seeding:
   a. Certified seed must be used on all temporary seedings. Select plants appropriate to the season and site conditions from those listed in Table 9-6:

Table 9-6 Guidelines for Temporary Seeding

Time of Year	Species	Seeding Rate
March 15 - May 15	Spring Oats	2 bu./AC.
	Barley	2 bu./AC.
	Perennial Ryegrass	30-40 lbs./AC.
	Orchard Grass	20-25 lbs./AC.
May 16 - July 15	Grain Sorghum (drilled)	10-20 lbs./AC.
	Forage Sorghum (drilled)	10-20 lbs./AC.
	Hybrid Sundangrass	20-30 lbs./AC.
July 16 - October 15	Spring Oats	2 bu./AC.
	Barley	2 bu./AC.
August 16 - October 15	Winter Wheat	1.5 bu./AC.
	Winter Rye	1.5 bu./AC.
October 15 - March 15	No planting, use mulches	

   b. Seed should be evenly applied with a drill, cultipacker seeder, or hydroseeder. For cyclone spreaders, the rate should be twice that of drill seeding. Small grains shall be planted no more than 1-1/2 inches deep and grasses no more than ½" deep.

5. When seedings are made on critical sites or adverse soil conditions, mulch material will be applied immediately after seeding. Seedings made during optimum seeding dates and with favorable soils on very flat areas may not need to be mulched.

Maintenance

Areas which fail to establish vegetative cover adequate to prevent rill erosion will be re-seeded as soon as such areas are identified. Control weeds by mowing.

9.6.17 Permanent Seeding

Permanent vegetation is the establishment of perennial vegetative cover on disturbed areas by planting seed. Its purpose is to reduce erosion and sediment yield from disturbed areas, to permanently stabilize disturbed areas in a manner that is economical, adaptable to site conditions, and allows selection of the most appropriate plant materials, to improve wildlife habitat and to enhance natural beauty. It may be used on disturbed areas where permanent, long-lived vegetative cover is needed to stabilize the soil and rough-graded areas which will not be brought to final grade for a year or more.

Construction Guidelines

1. Prior to seeding, install all necessary erosion control practices such as dikes, waterways, and basins.

2. Provide proper shaping of the area to be seeded in a manner such that seedbed preparation and seeding operations can be carried out.

3. Soil conditions needed for the establishment and maintenance of permanent seeding must be as follows:
   a. Enough fine-grained material to maintain adequate moisture and nutrient supply.
   b. Sufficient pore space to permit root penetration. A bulk density of 1.2 to 1.5 indicates that sufficient pore space is present. A fine granular or crumb-like structure is also favorable.
   c. Sufficient depth of soil to provide an adequate root zone. The depth to rock or impermeable layers such as hardpans shall be 12 inches or more, except on slopes steeper that 2:1 where the addition of soil is not feasible.
   d. A favorable pH range for plant growth. If the soil is so acidic that a pH range of 6.0-7.0 cannot be attained by addition of pH-modifying materials, then the soil is considered an unsuitable environment for plant roots and further soil modification would be required.
   e. Freedom from toxic amounts of materials harmful to plant growth.
   f. Freedom from excessive quantities of roots, branches, large stones, large clods of earth, or trash of any kind. Clods and stones may be left on the slopes steeper than 3:1 if they do not significantly impede good seed soil contact.

   If any of the above criteria cannot be met, then topsoil must be applied.

4. Seedbed Preparation:
   a. Flat areas and slopes up to 3:1 grade shall be loose and friable to a depth of at least 3 inches. The top layer of soil shall be loosened by raking, discing or other acceptable means before seeding.
   b. Slopes steeper than 3:1 must have the top 1-3 inches of soil loose and friable before seeding.
   c. When the area is compacted, crusted or hardened, the soil surface shall be loosened by discing, raking, harrowing, or other acceptable means. Seedbed preparation should not be undertaken when excessively wet conditions exist.
   d. Soil amendments must be applied according to the recommendations of a soil test.

5. Seeding:
   a. Design a seed mix by using City of Lincoln approved seed mix. Mixtures for permanent plantings will contain a mixture of two or more species. A single species may be used on some residential or recreational areas.
   b. Certified "Blue Tagged" seed will be used on all permanent seedings. Permanent seedings shall have a minimum of 90 PLS/s.f.
   c. Seed should be evenly applied in two directions with a cyclone spreader, drill, cultipacker seeder, or hydroseeder on a firm, moist seedbed. Maximum seeding depth shall be 1/4" on clayey soils and ½" on sandy soils, when using other than hydroseeder method of application.
   d. If hydroseeding is used and the seed and fertilizer is mixed, they will be mixed on-site and the seeding shall be immediate without interruption.
   e. Cool-season dominant mixtures shall be applied August 15 - May 30. Warm-season dominant mixtures shall be applied October 1 - June 15.
   f. A protective cover crop of annual plants may be seeded for erosion protection until establish of the permanent vegetation. Cover crop planting may be done in conjunction with permanent seeding or immediately after permanent seeding has taken place. Select cover crop plants appropriate to the season and site conditions from those listed in Table 9-7:

Table 9-7 Guidelines for Selecting Cover Crop Plants

Time of Year	Species	Seeding Rate
March 15 - May 15	Spring Oats	2 bu./AC.
May 16 - July 15	Grain Sorghum (drilled)	10-20 lbs./AC.
	Forage Sorghum (drilled)	10-20 lbs./AC.
	Hybrid Sundangrass	20-30 lbs./AC.
July 16 - October 15	Spring Oats	2 bu./AC.
	Winter Wheat	1.5 bu./AC.
	Rye	1.5 bu./AC.
October 15 - March 15	No planting, use mulches	

   g. All permanent seedings must be mulched immediately upon completion of seed application.

Maintenance

1. In general, a stand of vegetation cannot be determined to be fully established until it has been maintained for one full year after planting.

2. New seedings shall be supplied with adequate moisture. Supply water as needed, especially late in the Spring season. Water applications shall be controlled to prevent excessive runoff.

3. Inspect all seeded areas for failures and make necessary repairs, replacements, and re-seedings within the planting season, if possible.
   a. If stand is inadequate for erosion control, overseed and fertilize using half of the rates originally specified. Fertilizer should be a low/no-phosphorus mix.
   b. If stand is 60% damaged, re-establish following seedbed and seeding recommendations.
   c. If stand has less than 40% cover, re-evaluate for use of soil amenities.

9.5.18 Hydroseeding/Hydro-Mulching

Hydro- mulching/Hydro- seeding is a grass planting process. The process begins by mixing mulch, seed, tackifier, fertilizer, and water into a tank of a hydro-mulching machine. The material is often called a slurry. Once applied to the soil, the material enhances initial growth .

Figure 9-31 shows an installation detail for hydroseeding/hydromulching

Design Detailing

- Prior to hydro-mulching and hydro-seeding, install any needed erosion and sediment control practices.
- Complete required shaping of area in such a manner that the operations can be carried out.
- Seed must be incorporated as needed except where seed is to be applied as part of the process.

Maintenance

All mulches and soil covering should be inspected periodically and after each rain event to check for erosion. Where erosion is observed in mulched areas, additional mulch should be applied.

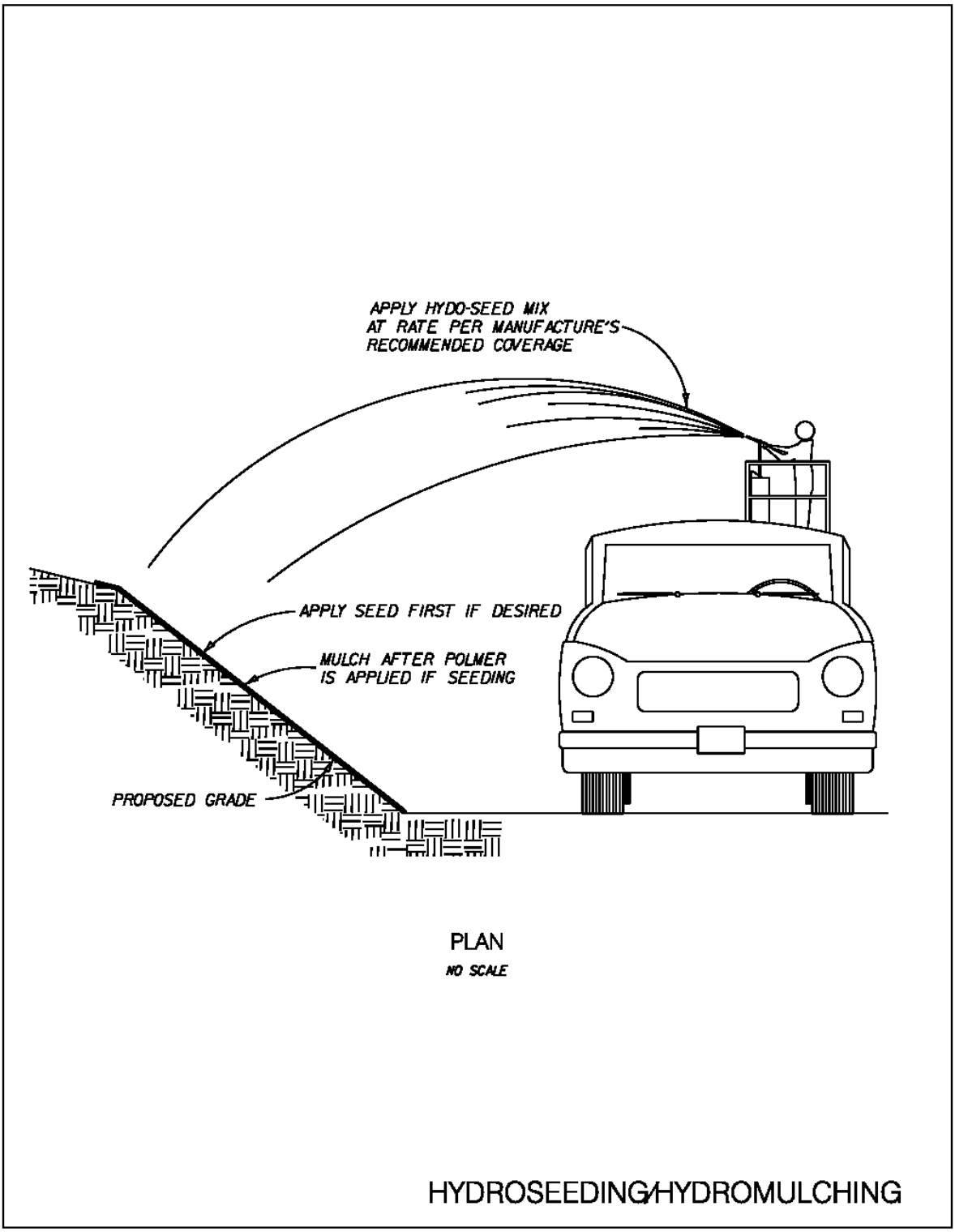

Figure 9-31: Hydroseed/Hydromulch/Polymer Application

9.5.19 Slope Tracking

Slope tracking is the technique used for surface roughening or scarification by means of mechanical equipment. Slope Tracking creates grooves that are perpendicular to the slope. The primary functions for Slope Tracking are to reduce erosion potential by decreasing runoff velocities, trap sediment, increase the chances for water infiltration, and aid in the establishment of vegetative cover.

Figure 9-32 shows an installation detail for slope tracking.

Design Detailing

When Slope Tracking is used for a surface roughing technique, is shall be done by operating tracked machinery up and down the slope to leave horizontal depressions in the soil. As few of passes of the machinery should be made to minimize compaction. If the slope steepness is greater than 3:1, Slope Tracking is not recommended. Immediately seed and mulch roughened areas to obtain optimum seed germination and growth.

Maintenance

Areas need to be inspected after each storm event, particularly after events that are greater than .05 inches. Regular inspections of slopes will indicate where additional erosion and sediment controls are needed. If rills appear they should be filled, graded again, and re-seeded immediately.

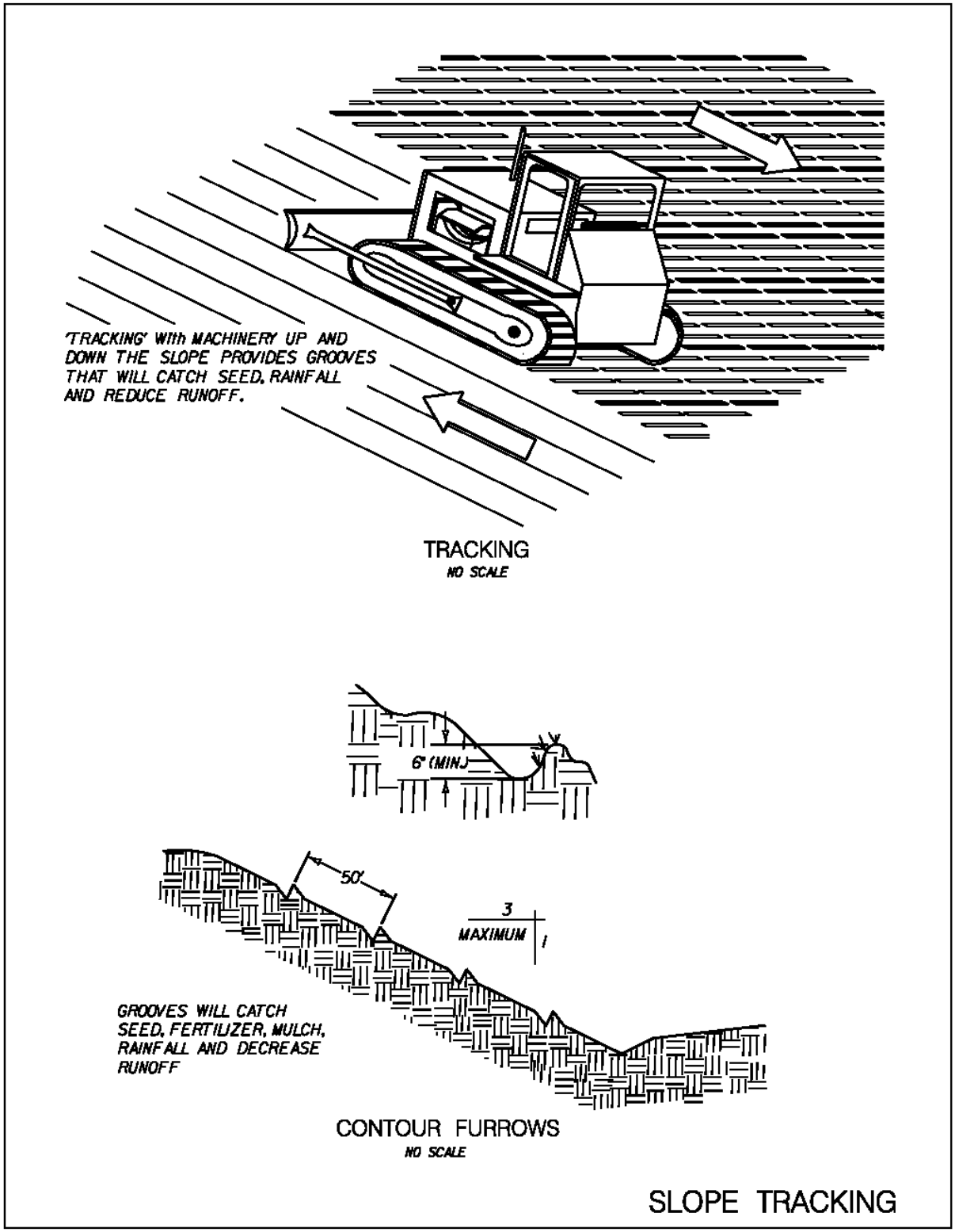

Figure 9-32: Slope Tracking/Contour Furrows

9.5.20 Mulching

Mulching is the application of plant residues or other suitable materials to the soil surface. Its purpose is to prevent erosion by protecting the soil surface from raindrop impact and reducing the velocity of overland flow. Mulch helps foster the growth of vegetation by increasing available moisture and providing insulation against extreme heat and cold. Mulching can be used at anytime where protection of the soil surface is desired. Mulch can be used in conjunction with seedings to establish vegetation, or by itself to provide temporary protection of the soil surface.

Construction Guidelines

1. Site Preparation:
   a. Prior to mulching, install any needed erosion and sediment control practices such as diversions, grade stabilization structures, berms, dikes, grassed waterways and sediment basins.
   b. Complete required shaping of area in a manner such that mulching operations can be carried out.
   c. Soil amendments shall be incorporated and surface roughening accomplished as needed. Seed must be applied prior to mulching except where seed is to be applied as part of a hydroseeder slurry containing fiber mulch or where seed is to be applied following an organic mulch spread during winter months.

2. Materials:
   a. Organic materials may be used in any area where mulch is required. Select mulch material based on site requirements, availability of materials, and availability of labor and equipment (see Table 9-7).
   b. Mulch materials must be spread uniformly by hand or machine. When spreading straw mulch by hand, divide the area to be mulched into approximately 1,000 s.f. sections and place 70-90 lbs. (two bales) of straw in each section to facilitate uniform distribution.

3. Anchoring Mulch:

Mulch must be anchored immediately to minimize loss by wind and water. This may be done by one of the following methods (listed by preference) depending upon the size of area, erosion hazard and cost.

a. Mulch Anchoring Tool and Tracking - A mulch anchoring tool is a tractor drawn implement designed to punch and anchor mulch into the top two inches of soil. This practice offers maximum erosion control but is limited to flatter slopes where equipment can operate safely. "Tracking" is the process of cutting mulch into the soil using a bulldozer or other equipment that runs on cleated tracks. Tracking is used primarily on slopes 3:1 or steeper. This practice should be done on the contour whenever possible, except tracking which should be done up and down the slope with cleat marks running across the slope.

b. Mulch Nettings - Staple lightweight biodegradable paper, plastic or cotton netting over the mulch according to manufacturer's recommendations.

c. Liquid Mulch Binders - Application of liquid mulch binders and tackifiers should be heavier at edges, in valleys, and at crests of banks and other areas where the mulch has a greater potential to be moved by wind or water. All other areas should have a uniform application of binder. Binders may be applied after the mulch is spread or may be sprayed into the mulch as it is being blown onto the soil. The use of synthetic binders is the preferred method of mulch binding. Apply at rates recommended by the manufacturer.

d. Wood Cellulose Fiber - The fiber binder shall be applied at a net dry weight of 750 lbs./AC. The wood cellulose fiber shall be mixed with water, and the mixture must contain a maximum of 50 lbs. Of wood cellulose fiber per 100 gallons of water.

e. Peg and Twine - Drive 8 to 10 inch wooden pegs to within 2 to 3 inches of the soil surface every 4 feet in all directions. Stakes may be driven before or after applying mulch. Secure mulch to the soil surface by stretching twine between pegs in a criss-cross within a square pattern. Secure twine around each peg.

Maintenance

All mulches and soil coverings should be inspected periodically and after each rainstorm to check for erosion. Where erosion is observed in mulched areas, additional mulch should be applied. Nets and mats should be inspected after rainstorms for dislocation or failure. If washouts or breakage occur, re-install netting or matting as necessary after repairing damage to the slope or ditch. Inspections should take place until grasses are firmly established. Where mulch is used in conjunction with ornamental plantings, inspect periodically throughout the year to determine if mulch is maintaining coverage of the soil surface; repair as needed.

ORGANIC MULCH MATERIALS AND APPLICATION RATES			
MULCHES:	RATES		NOTES:
	Per Acre	Per 1000 sq. ft.	
Straw or Hay	1 ½ - 2 tons (Minimum 2 tons for winter cover)	70 - 90 lbs.	Free from weeds and coarse matter. Must be anchored. Spread with mulch blower or by hand
Fiber Mulch	Minimum 1500 lbs.	35 lbs.	Do not use as mulch for winter cover or during hot, dry periods. * Apply as slurry.
Corn Stalks	4 - 6 tons	185 - 275 lbs.	Cut or shredded in 4-6" lengths. Air-dried. Do not use if fine turf areas. Apply with mulch blower or by hand.
Wood Chips	4 - 6 tons	185 - 275 lbs.	Free of coarse matter. Air-dried. Treat with 12 lbs nitrogen per ton. Do not use in fine turf areas. Apply with mulch blower, chip handler, or by hand.
Bark Chips or Shredded Bark	50 - 70 cu. yds.	1 - 2 cu. yds.	free of coarse matter. Air dried. Do not use in fine turf areas. Apply with mulch blower, chip handler, or by hand.
* When fiber mulch is only available mulch during periods when straw should be used, apply at a minimum rate of 2000 lbs./ac. or 45 lbs./1000 sq.ft.			

Table 9-8 Organic Mulch Materials And Application Rates

9.5.21 Rolled Erosion Control Products

Rolled erosion control products are protective covering netting, blankets or turf reinforcement mats (TRMs) installed on a prepared planing area of a steep slope, channel, or shoreline. They aid in controlling erosion on critical areas by absorbing the energy from raindrop impacts and providing a microclimate which protects young vegetation and promotes its establishment. TRMs are also used to raise the maximum permissible velocity and shear stress of turf grass stands in channelized areas by enabling the turf to resist the forces of erosion during storm events.

Design Details

Netting, blankets, and TRMs will aid in controlling erosion on slopes steeper than 8 percent and of highly erodible soils by providing a protective cover made of straw, jute, wood or other organic plant fiber with cotton string or polypropylene netting to hold the product in a flat form. Netting can be used alone over blown straw as an alternative to crimping or use of a tackifier.

These products can be used on short, steep slopes where erosion hazard is high and planting is likely to be too slow in providing adequate protective cover; in vegetated channels where the design velocity and shear stress of design flow exceed allowable on streambanks where moving water is likely to wash out new plantings; or in areas where the forces of wind prevent standard mulching practices from remaining in place until vegetation becomes established.

Rolled erosion control products provide protection from raindrop impact and offer additional soil stabilization on prepared planting areas. TRMs also raise the maximum permissible velocity and shear stress of turfgrass stands in channelized areas by reinforcing the vegetation to resist the forces of erosion during storm events.

Before installation of these products, the area should be final graded to a smooth and uniform surface, free of debris. Topsoil should be incorporated if needed. Seed and fertilize as shown on the plan. The erosion control netting, blankets, and mats should be installed in accordance with the manufacturer's recommendations and specifications. All products should be anchored following the manufacturer's recommended stapling pattern for each specific application.

Some important factors in the choice of netting, blanket, or TRM are soil conditions, steepness of slope, length of slope, type and duration of protection required to establish desired vegetation, and probable sheer stress. Consult the manufacturer's product specifications to determine the correct product for each specific application required.

Construction Guidelines

Rolled erosion control blankets and mats can be applied to problem areas to supplement vegetation in its initial establishment and to provide a safe and more natural conveyance for high velocity stormwater runoff. They are used in many applications where a structural lining would previously have been required. Care must be taken to choose the blanket or matting which is most appropriate for the specific needs of a project. Two general types of blankets and mats are discussed within this section. However, with the abundance of soil stabilization products available today, it is impossible to cover all the advantages, disadvantages, and specifications of all manufactured blankets and mats. Therefore, there is no substitute for a thorough understanding of the manufacturer's recommendations and a site visit by a designer or plan reviewer to verify a product's appropriateness.

Blankets should be used to help establish vegetation on previously disturbed slopes of 3H:1V or steeper. Since the materials which compose the soil stabilization blankets will deteriorate over time, they should be used in permanent conveyance channels with the realization that resistance to erosion will ultimately be based on the type of vegetation planted and the existing soil characteristics. During the establishment of vegetation, blankets should not be subjected to velocities greater than 4 feet per second.

Blankets provide the following benefits in vegetative stabilization when properly applied:

1. Protection of the seed and soil from raindrop impact and subsequent displacement.
2. Thermal consistency and moisture retention for seedbed area.
3. Stronger and faster germination of grasses and legumes.
4. Planing off excess stormwater runoff.
5. Prevention of sloughing of topsoil added to steeper slopes.

TRMs consists of a non-degradable, three-dimensional polypropylene structure which may also have coconut or

other organic fiber layers within it so long as the non-degradable portion of the blanket will withstand design velocities and shear stresses after the organic fibers degrade. The matting becomes entangled and penetrated by roots forming continuous anchorage for surface growth and promoting enhanced energy dissipation. They should be used on slopes 2H:1V or steeper, and in stormwater conveyance channels.

In addition to those benefits noted for blankets, TRMs provide the following benefits for vegetative stabilization and when replacing concrete and riprap channel linings:

1. Cause sediment to drop out of stormwater and fill matrix with fine soils which become the growth medium for the development of roots.
2. Act with the vegetative root system to form an erosion resistant cover, which resists hydraulic lift and shear forces when embedded in the soil within stormwater channels.

Since TRMs are non-degradable, they can be used in permanent conveyance channels to withstand higher velocities and shear stresses than would normally be allowable with only soil and vegetation. Permissible velocities and shear stresses for TRM for reinforced grass-lined channels range from 10 - 20 fps and 6 - 10 psf respectively.

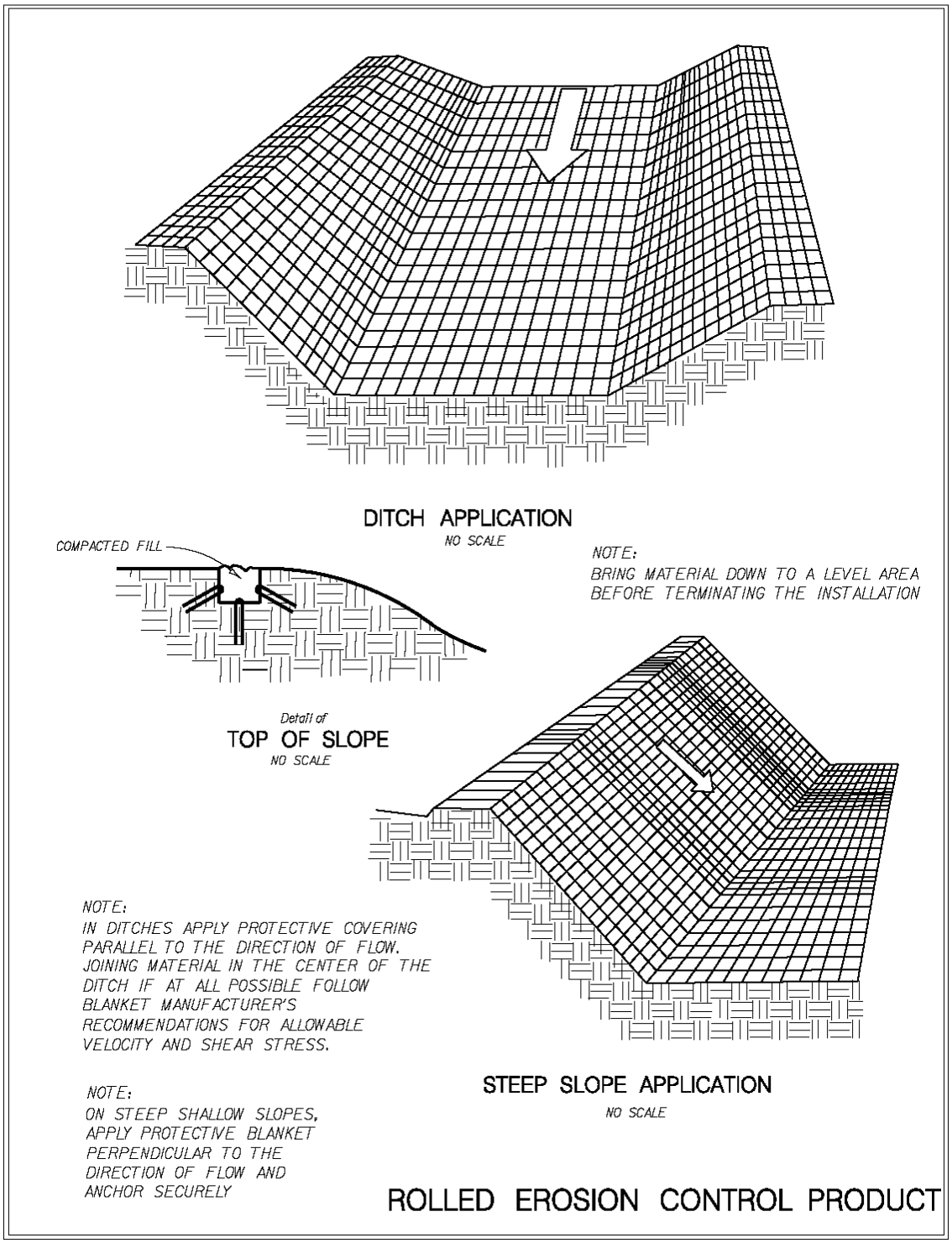

Figure 9-33a: Rolled Erosion Control Products - Shallow Slope Application

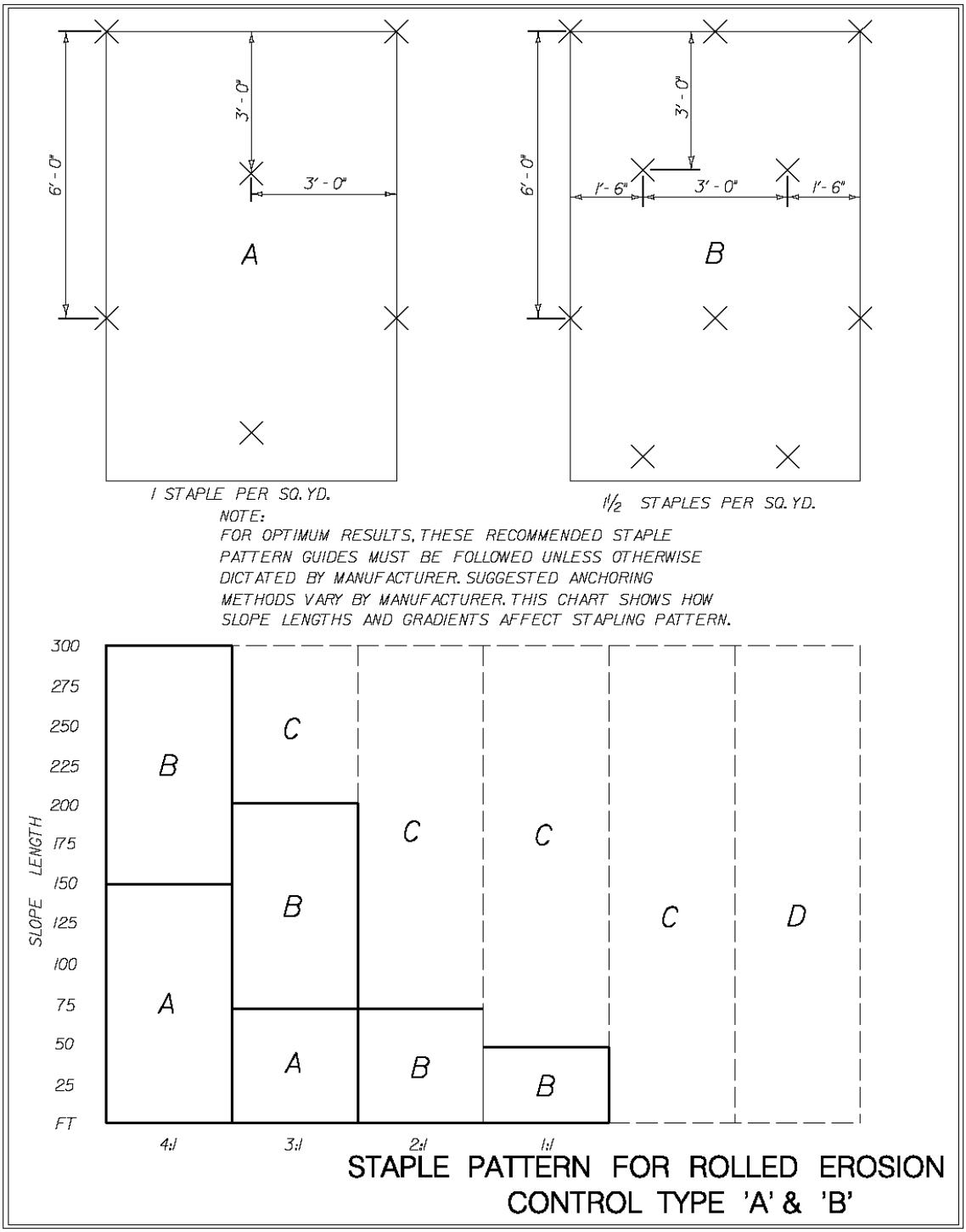

Figure 9-33b: Rolled Erosion Control Products - Steep Slope/Ditch Application

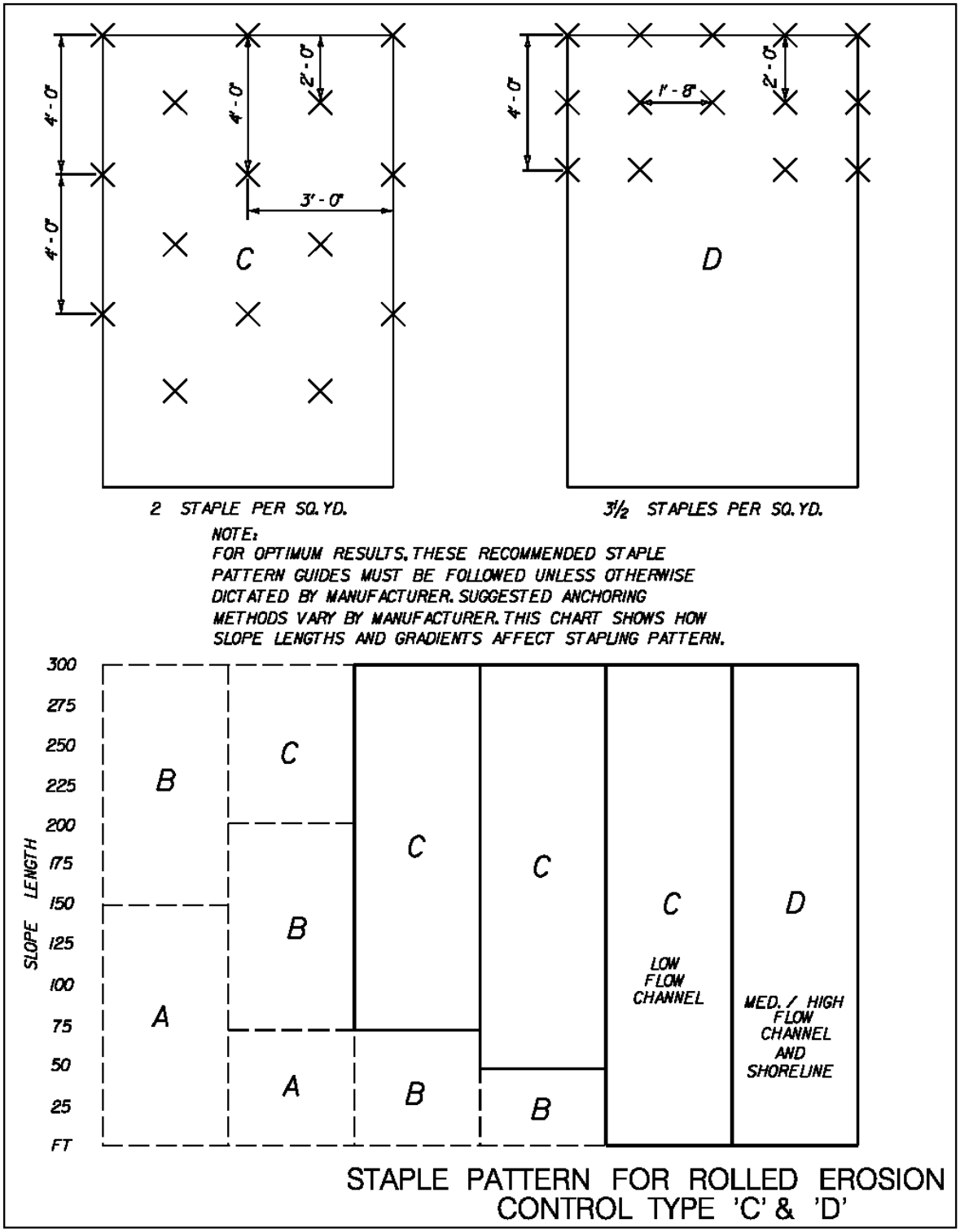

Figure 9-33c: Staple Pattern Parameters for Control Type C & D

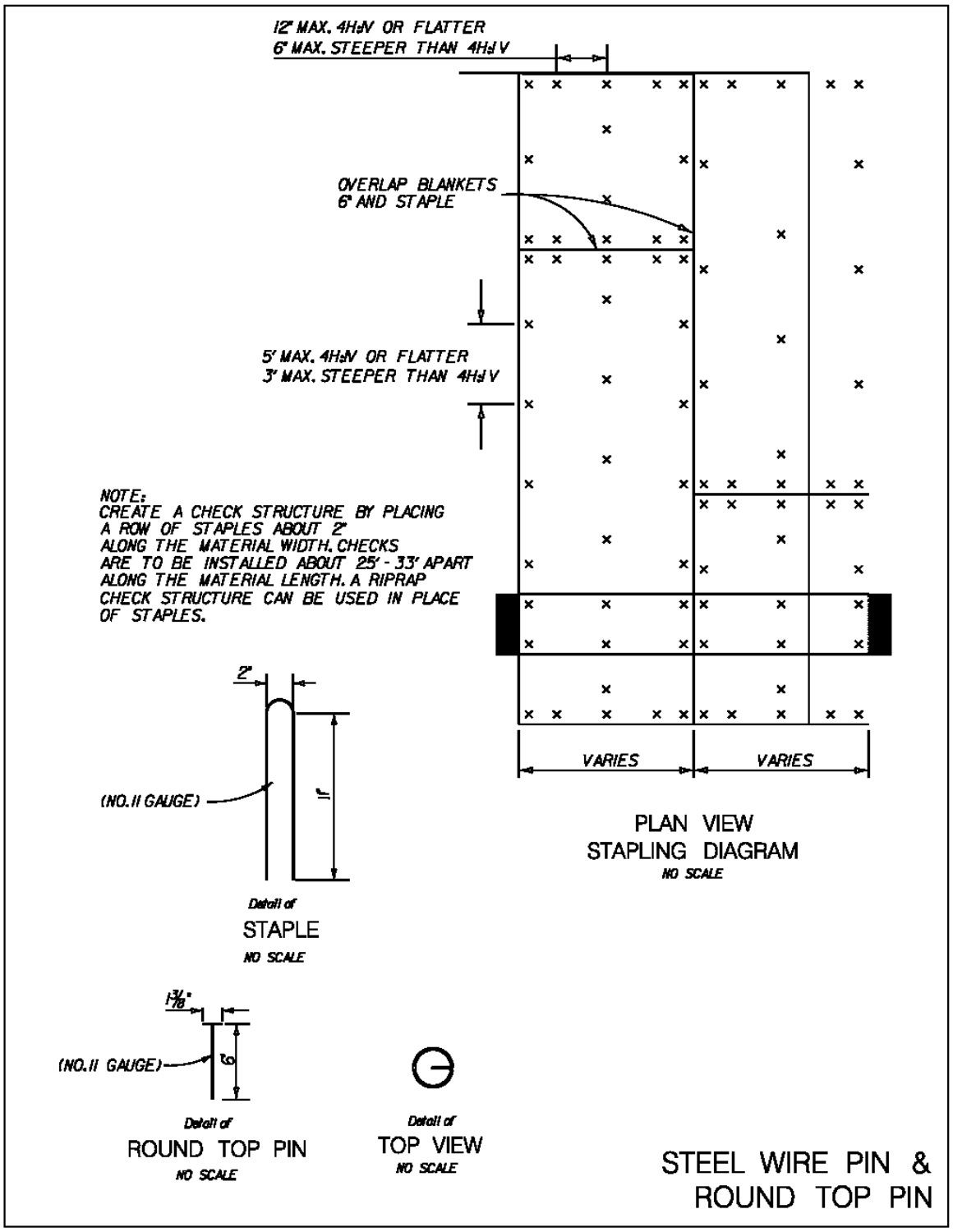

Figure 9-34: Rolled Erosion Control Products Staple Details

9.5.22 Other Best Management Practices

The LPSNRD 1994 *Manual of Erosion and Sediment Control and Stormwater Management Standards* contains detailed specifications and drawings for a number of different erosion and sediment control measures. The following structural control measures are not included herein for brevity, but they are included in the LPSNRD (1994) manual and may be useful in specialized applications.

- Safety Fence
- Brush Barrier
- Temporary Slope Drain
- Road Stabilization
- Utility Stream Crossing (e.g. diversion channel crossing, flume pipe crossing, coffer dam crossing)
- Dewatering Structure (e.g. portable sediment tank, filter box, straw bale/silt fence pit)
- Temporary Fill Diversion
- Turbidity Curtain
- Dust Control
- Surface Roughening
- Lot Benching
- Paved Flumes and Energy Dissipators
- Subsurface Drain
- Structural Streambank Stabilization (e.g. gabions, deflectors, log cribbing, grid pavers)
- Grade Stabilization Structure
- Infiltration Basin
- Infiltration Trench
- Detention Pond
- Extended Detention Pond
- Stormwater Conveyance Channel
- Vegetative Stream Bank Stabilization
- Topsoiling
- Sodding
- Permanent Diversion
- Vegetated Swale
- Temporary Right-of-Way Diversion

References

American Association of State Highway and Transportation Officials, A Policy on Geometric Design of Highways and Streets. 1994.

American Association of State Highway and Transportation Officials, Guideline Volume III, Erosion and Sediment Control in Highway Construction. Barfield and Clar 1985.

Cullen, Sherwood W. and David C. Wyant. Installation of Straw and Fabric Filter Barriers for Sediment Control. Virginia Highway and Transportation Research Council, Report No. VHTRC 77-R18. 1976.

Division of Soil and Water Conservation, Virginia Department of Conservation and Historic Resources. Virginia Erosion & Sediment Control Handbook, Second Edition. 230 Governor Street, Suite 206, Richmond, Virginia. 1980.

Fifield, Jerald S., Field Manual on Sediment & Erosion Control Best Management Practices for Contractors and Inspectors, 1st Ed., Forester Press, 2001

Kansas City Metropolitan Chapter, American Public Works Association, Division 5100 Erosion and Sediment Control Design Criteria, 2003

Lower Platte South Natural Resources District. Manual of Erosion and Sediment Control and Stormwater Management Standards. 1994.

Michigan Department of Management and Budget, Infrastructure Services, Design, and Construction Division, Soil Erosion & Sedimentation Control Guidebook, 2002

Minnesota Pollution Control Agency, Stormwater Compliance Assistance Toolkit for Small Construction Operators, 2004

North Carolina Sedimentation Control Commission. Erosion and Sediment Control Planning and Design Manual. North Carolina Department of Natural Resources and Community Development. 1988.

Schwab et al. And American society of Civil Engineers. Soil and Water Conservation Engineering.

U.S. Department of Interior, Bureau of Reclamation. Hydraulic Design of Stilling Basins and Energy Dissipators, Engineering Monograph No. 25.

U.S. Department of Transportation, Federal Highway Administration. Design of Stable Channels with Flexible Linings, Hydraulic Engineering Circular No. 15. 1975.

U.S. Department of Transportation, Federal Highway Administration. Hydraulic Design of Energy Dissipators for Culverts and Channels, Hydraulic Engineering Circular No. 14.

U.S. Environmental Protection Agency, National Menu of Best Management Practices for Stormwater Phase II, 1999

U.S. Environmental Protection Agency, NPDES Construction General Permit, 2005

U.S. Environmental Protection Agency, Developing Your Stormwater Pollution Prevention Plan: A Guide for Construction Sites, 2007