REVISED

AGENDA FOR THE WEST HAYMARKET JOINT PUBLIC AGENCY (JPA)

TO BE HELD THURSDAY, January 24, 2013 AT 3:00 P.M.

CITY-COUNTY BUILDING
555 S. 10TH STREET
CITY COUNCIL CHAMBERS ROOM 112
LINCOLN, NE 68508

1. Introductions and Notice of Open Meetings Law Posted by Door (Chair Beutler)

2. Public Comment and Time Limit Notification Announcement (Chair Beutler)

   Individuals from the audience will be given a total of 5 minutes to speak on specific items listed on today's agenda. Those testifying should identify themselves for the official record.

3. Approval of the minutes from the JPA meeting held January 11, 2013 (Chair Beutler)
   - (Staff recommendation is for the JPA Board to approve the minutes as presented)

4. WH 13-6 Resolution to approve Amendment No. 2 to the Agreement for Construction Observation and Testing Services for the Arena and Arena Garage between Alfred Benesch & Company and the West Haymarket Joint Public Agency to expand the scope of services to include rescheduling of Arena VIP Garage surcharge due to early removal of BNSF tracks, final reconciliation of Arena Ramp pile foundation design and geotechnical engineering for certification of the Arena Garage piles for an additional fee of $14,472.00 (Paula Yancey)
   - Public Comment
   - (Staff recommendation is for the JPA Board to approve the resolution)

5. WH 13-7 Resolution to approve the Addendum to Energy Services Agreement between the West Haymarket Joint Public Agency and District Energy Corporation to provide additional energy services to the West Haymarket Arena and related facilities (Doug Bantam)
   - Public Comment
   - (Staff recommendation is for the JPA Board to approve the resolution)

6. WH 13-8 Resolution authorizing District Energy Corporation to construct and install an expanded distribution system consisting of four pipes from the existing 6th and P Streets manhole to a new manhole located at 6th and O Streets (Doug Bantam)
   - Public Comment
   - (Staff recommendation is for the JPA Board to approve the resolution)

7. WH 13-9 Resolution to approve a Contract Agreement between the West Haymarket Joint Public Agency and TMCO, Inc. Metal and Art Division, pursuant to Bid No. 13-007 for procurement, delivery and set up of Custom Copper Top Bar Height Tables, for the sum of $45,688.65 (Paula Yancey)
   - Public Comment
   - (Staff recommendation is for the JPA Board to approve the resolution)

8. WH 13-10 Resolution to approve a Contract Agreement between the West Haymarket Joint Public Agency and Olsson Associates, pursuant to Bid No. 13-011, to perform Special Inspections for Pedestrian Bridge, for the sum of $67,946.00 (Paula Yancey)
    - Public Comment
    - (Staff recommendation is for the JPA Board to approve the resolution)

9. WH 13-11 Resolution to approve Amendment No. 2 to the November 1, 2011 Consultant Agreement for Extended Program Management Services and Extended Project Management Services between the West Haymarket Joint Public Agency and P.C. Sports to amend the Scope of Services to provide additional professional services in connection with two new parking garages (Decks 2 and 3) for the West Haymarket Redevelopment Project for the sum of $360,000.00 (Dan Marvin)
    - Public Comment
    - (Staff recommendation is for the JPA Board to approve the resolution)

10. WH 13-12 Resolution to approve a Contract Agreement between the West Haymarket Joint Public Agency and Riley Manufacturing, pursuant to Bid No. 13-005, for procurement, delivery and set up of the Dasher Board System for Pinnacle Bank Arena, for the sum of $191,300.00 (Paula Yancey)
    - Public Comment
    - (Staff recommendation is for the JPA Board to approve the resolution)

11. Set Next Meeting Date: Friday, February 8, 2013 at 3:00 p.m. in County-City Building Room 303*

12. Motion to Adjourn

*If the conflicting meeting ends early, this meeting will be held in City Council Chambers Room 112.

WEST HAYMARKET JOINT PUBLIC AGENCY (JPA)
Board Meeting
January 11, 2013

Meeting Began At: 3:00 P.M.

Meeting Ended At: 3:42 P.M.

Members Present: Chris Beutler, Eugene Carroll, Tim Clare

Item 1 -- Introductions and Notice of Open Meetings Law Posted by Door

Chair Beutler opened the meeting with introduction of the Board members. He advised that the open meetings law posted at the back of the room is in effect.

Item 2 – Reports and Communications Received

Beutler pointed out that this item was to let the public know that the communication was received. There is no action necessary.

Item 3 -- Public Comment and Time Limit Notification

Public comment is welcome. Beutler stated that individuals from the audience will be given a total of five minutes to speak on specific items listed on today's agenda. Those testifying should identify themselves for the official record and sign in.

Item 4 -- Approval of the minutes from the JPA meeting held December 18, 2012

Beutler asked for corrections or changes to the minutes of the December 18, 2012 meeting. Being none, Clare moved approval of the minutes. Carroll seconded the motion. Motion carried 3-0.

Item 5 – West Haymarket Progress Report

Paula Yancey, PC Sports, distributed a monthly information packet (attached hereto) on the status of the Pinnacle Bank Arena and associated infrastructure projects.

Yancey reviewed the participation numbers, indicating that through November-December 2012 there have been 2,255 workers on site. This includes both engineering and professional services personnel. Of the total workers, 1,303 (or 58%) live in Lincoln/Lancaster County and another 703 (or 31%) live in Nebraska outside Lancaster County. Only 249 (or 11%) were from outside Nebraska.

Looking at just the construction employees doing the work onsite who are using certified payrolls or Davis Bacon, there have been 1,974 workers on site. Of that total, 1,160 (or 59%) of the workers are from Lincoln/Lancaster County, 648 (or 33%) were from Nebraska, and only 166 (or 8%) were from outside of Nebraska.

For the West Haymarket company participation numbers 328 firms have been awarded contracts. Out of the total firms, 253 (or 77%) were Nebraska firms and only 75 (or 23%) were outside Nebraska. That equates to $148 million out of a total $200 million awarded to firms that actually have an address in Nebraska.

Adam Hoebelheinrich, PC Sports, proceeded with the infrastructure progress update for the area around the arena. Hoebelheinrich displayed an image of the ramp to the new pedestrian bridge. Hausmann completed this work earlier this fall and the dirt is settling prior to the bridge and walk completion. This is in the north festival area by Haymarket Park.

The next two images were of TDP's development projects that are moving along quickly. The first one shows the TDP Canopy Lofts Project where the exterior of the building is going on. The second picture is of the Railyard Project showing the location where the Iron Horse Parking Lot was previously. The foundations are completed and some structural steel is in place.

The Parking Deck #1 is currently in the precast stage and will go up quickly in the next several months. Currently, they are six stories up in about a ninth of the garage.

The following two images were of a new project that just started in the last week and a half. This is Hawkins starting the pedestrian bridgework and the image shows them pounding some foundation pile for a bridge pier. The location of this work is north of the arena and south of railroad tracks.

Adam completed his report showing two aerials as of December 18, 2012 – one of the arena and one of the entire job site. The monthly aerials reflect the changing progress with the latest showing the project moving up into the air.

John Hinshaw, Mortenson Construction, reported on the Pinnacle Bank Arena progress. He reported that they had worked 206 consecutive days without a recordable safety incident. Unfortunately, that streak ended this week when one of the craft workers slipped on a ladder landing on his feet, but hurting his back. There is an average of over 300 craft workers onsite daily. The image displayed shows the workers at the latest safety luncheon where Tom Osborn was the guest speaker.

Since the topping out ceremony, the inner bowl concrete has been placed. The picture is from underneath where the precast for the inner bowl has been set. The garage foundations have been completed this month.

A summary of the milestones achieved include:

- 2nd Phase of structural precast has been completed in the lower bowl
- Last tower crane removed
- DEC is providing heat to the arena, so pipes are actually flowing hot water. Some air-handling units are run in the building providing some heat to the building.
- Interior stairs have been placed
- All the elevator shafts completed
- Production drywall started this month

Hinshaw showed a series of slides on the arena construction work, including:

- Fireproofing work – this is the fuzzy stuff that is sprayed on steel columns to protect them from heat in case of a fire. They get this question often during tours.
- The last stadia being set over the truck entrance used during the last nine months. That hole is now filled in.
- Several images show detailing of structural precast.
- The next couple of images show production drywall. On the south end of the job site, Falewich has started production drywall meaning all the rooms are released for drywall. Once all the studs are covered, they will move to tape, finish, and paint so heat is working in those areas.
- By the end of next week, green board should enclose the building and windows will be going in for the rest of the month. Therefore, by the end of January, the building should be construction enclosed and heat will start pumping through the entire building.
- Workers are installing some z strip over the vapor barrier. This holds mineral oil and the metal panels get installed over this barrier.
- Workers are shown installing the metal panels on the north side of the project.
- The footings are being dug around the ice rink on the inner bowl.
- On the last image in the bottom left the ice rink shape can be seen, and the installation of the catwalks can be seen in the middle. All the catwalks are going up where the spotlights will go and all the sports lights are being installed.

Responding to Clare, Hinshaw explained that the ice floor is for the ice rink that will have the hot and chilled water to create an ice sheet if needed for events such as hockey or Disney on Ice. They are pouring the perimeter prior to the contractor installing the piping. Finally, a concrete slab will be poured in the middle encasing that piping.

Beutler asked about the chart reviewed earlier entitled "West Haymarket Company Participation." He understood Regent Clare had an interest in discussing this chart. Beutler asked Yancey to discuss how the chart was constructed and then asked Bob Caldwell, Hampton Construction Company (Mortenson's partner in the project), to discuss the rationale behind how the chart is constructed.

Yancey reflected that there had been several questions over the last few days, and then today in a blog, on how the company participation numbers are tracked regarding local participation determinations. Yancey explained that they are tracking local participation based on the branch or the business with which we are contracted and doing work. It may be a nationally owned firm. However, if we are working with the local branch office that has a significant and established presence locally, and we are working with those employees, those are considered local. Their employees are living and working locally, their children are going to school locally, and they are paying taxes locally – either in Lincoln or in Nebraska. Responding to Beutler, Yancey confirmed that this same methodology has been used since the chart was started, as well as in other projects around the country. There were two company names listed inadvertently as local due to a clerical error. That list has been corrected, and these were never including in the numbers shown. In addition, there is a company with an Omaha office, but the main office is out of Nebraska. The employees are being tracked based on where they live, so they were tracked as out-of-state workers. The local branch office was included, but found to be more of a satellite office and has been moved out of the local numbers. However, the contract with this company is so small in the overall numbers, that it does not affect the overall percentages.

Caldwell agreed with Yancey that the methodology was agreed upon by everyone upfront. He confirmed Yancey was correct in her analysis. There were 450 people show up for the first subcontractor meeting in Lincoln to look at the arena. When he looks at that list, there are companies

that had done construction with Hampton for 10-40 years in Lincoln because they are the branch office or the distributor. These local managers may own the distributorship. They are local companies that have had a local presence for a very long time. Hampton considers these partners as they are local companies that have been servicing Lincoln for many, many years. They are proud and confident of the decisions on this issue. An example not on the list would be Linweld. They are owned by a national conglomerate, but have been in Lincoln over 60 years and Hampton just completed an addition to the local plant. These are local jobs and part of the heart of the local economy. Beutler offered that there is good reason to strengthen these local offices. Clare went on to comment that he does not intend to review where a company is incorporated or established. If they have a significant local presence -- have local employees who are living and paying taxes here, who are buying groceries and other staple items here -- that is what he is focusing on and appreciates the efforts to utilize those employees and companies. That means the people on the chart with a local address or presence are having checks mailed to a Nebraska address or are taxpayers in Nebraska, which translates into a benefit to the local economy. That is a benefit to this project. Clare summarized that he believes the JPA has lived up to its intent and promise which was to utilize local talent in putting this project together, and he appreciates the efforts. Carroll echoed those sentiments. There is $148 million being spent in the State of Nebraska that is being recycled and reused in the State, which was the important goal of everyone. He believes Mortenson and Hampton have done an excellent job of getting local talent involved, and he believes the JPA is doing what it said it would do on this project.

Caldwell summarized his final comment. As he has said at many community groups, had the JPA not allowed the local participation to be part of the initial scoring, many of those local offices/employees would not have had the opportunities to partner on this job. There have been regional and national companies that came to town. When they saw that local participation was part of the formula, they were going around the community to find a local partner. The system was set up and it worked. And, now the local companies are on the job. They are very proud of that fact.

Jane Kinsey, Watchdogs of Lincoln Government, noted that inspectors were to be named in January and wondered if that information would be on the next meeting since she did not see it on today's agenda. Yancey confirmed bids were received today and the intent is to have those on the January 24 agenda. Kinsey wanted to know who was removed from the list as far as local companies and how we know if companies are paying taxes in Nebraska. Yancey explained that the clerical error had Gephart mistakenly shown as a local firm, however, they only partner with other local firms. Their name was removed from the list, but they were never tracked as a local company in the numbers. AGA was another one. Yancey will be sure Kinsey gets a new list of firms. Beutler explained as far as the tax issue that the State Department of Revenue would show who is paying taxes in Nebraska.

Item 6 -- Approval of December 2012 Payment Register

Steve Hubka, City Finance Director, presented the payment register for December 2012. It totals $11,173,497. The vendors are ones used previously. All expenditures are within the budget and his office is collecting proper approvals.

Clare stated there have been some comments that we are over budget and asked for some clarification for the public. Yancey explained that we are not over budget, but that the budget has grown by additional revenue sources. Clare summarized that additional dollars by additional revenue sources have added funding for upgrades or additional work. One such example is Adidas adding dollars to upgrade the work allowed for in the initial budget. The work was identified in the initial budget, but the work was enhanced by additional revenue from the private source. So, the overall cost of the project has

increased, but not to the original budget or the taxpayers. The project was simply enhanced by the additional revenue. Yancey confirmed and explained that to follow accounting procedures they need to adjust revenues as they adjust expenditures accordingly. Hubka confirmed as well. Clare again shared his belief that the JPA has been very diligent in keeping this project on time and on budget while utilizing local talent.

Kinsey came forward to confirm whether the budget increased and if new monies been received yet. Clare confirmed that the budget increased by the additional revenue sources. In his example, it was Adidas supplying additional funding. The money has not necessarily been received yet, but the point was that these commitments are what allows enhancements to the project. They are not out of JPA budget money, but out of other grants and revenue sources. The JPA budget has not increased. Kinsey wondered if this included the $7 million to which the newspaper referred. Clare confirmed it did. Kinsey requested that the reporter clarify that for the public. It is a common concern that when the government finds more money they spend more, so she would encourage more explanation so that the public feels satisfied that the Board is doing as it promised.

Carroll moved approval of the payment register. Clare seconded the motion. Motion carried 3-0.

Item 7 -- Review of the December 2012 Expenditure Reports

Hubka presented the job cost and operating expenditure report for December 2012. The job cost report does reflect the changes to the budget approved at the last meeting. Hubka confirmed that we are on budget.

There was no public comment.

Item 8 -- WH 13-1 Resolution to approve Amendment No. 16 to the Agreement for Engineering Services between Olsson Associates dba Lincoln Haymarket Infrastructure Team and the West Haymarket Joint Public Agency, Haymarket Infrastructure Design Project No. 870000, to include the Final Construction Phase Services for the Parking Lot, Festival Space and Pedestrian Bridge Construction; to deduct certain fees for Projects A-1, A-2, A-3, A-6, A-8, A-10, A-17 and A-19, to increase the fee for Project A-5 and to make adjustments on hourly rates for the 2013 calendar year

Yancey explained that this is for approval of Amendment No. 16 to the Lincoln Haymarket Infrastructure Team (LHIT) for the construction phase services related to the festival space and pedestrian bridge construction. This resolution also increases the hourly rates for the 2013 calendar year using the Consumer Price Index. This is the same concept used last year when we went from the 2011 to 2012 rates. This additional service request is for $690,000 providing for the staff to monitor the unit price contract work for the installation of the festival space and to provide inspection services for testing on items such as the asphalt and concrete. The special inspections for the pedestrian bridge are a separate RFP to be presented at the next JPA meeting. After review of the overall LHIT contract, there were savings in several areas. The offset savings leaves a net increase of $387,560 in lieu of the $690,000. With approval, the revised LHIT contract amount would be $10,510,133.

Being no public comment, Carroll moved approval of the resolution. Clare seconded the motion. Motion carried 3-0.

Item 9 -- WH 13-2 Resolution to approve the Portable Basketball Floor Contract with Robbins Sports Surfaces for the procurement, delivery and setup of the portable basketball floor and associated accessories for the Pinnacle Arena for the sum of $107,160.42

Yancey introduced the resolution stating that the project is now moving into the next phase of work involving the FFE (furniture, fixtures, and equipment) procurement. These loose items need to be in place when the building opens to be able to function. This item is for the portable basketball floor and associated accessories in the arena. This was bid through the City's Purchasing procurement process. Robbins Sports Surfaces was deemed the most responsive with the product closest meeting the specifications of those received. The total is for $107,160.42 and it is within the budget amount in the FFE budget.

Clare asked about Robbins Sports Surfaces. Yancey reported that Robbins is one of the leading companies that provides portable basketball floors to NBA and NCAA buildings. She has worked with them several times in the past. They are a reputable, quality firm. Responding to Carroll's inquiry, Yancey explained that there was a sample design for bidding needs, but they would be working with UNL on the final design and painting layouts.

Kinsey wondered if the portable nature of the floor allowed for other events. Yancey confirmed that the portable flooring and some seating options allowed for other events. Kinsey wondered about the plans for students to stand and about the student fees. Yancey confirmed there is allowance for students to stand around the floor, but there is also some seating for students. As far as the ticket pricing, UNL sets those fees. There is fixed seating installed for much of the bowl, but there will be a contract that will be brought forward soon for folding chairs. This will allow some flexibility in concert or other seating. They are deferring to UNL on the setup for students. Everyone seems excited, and they do not anticipate any problems. In response to Clare, Yancey confirmed that this is the same floor vendor as in the practice facility.

Clare moved approval of the resolution. Carroll seconded the motion. Motion carried 3-0.

Item 10 -- WH 13-3 Resolution to approve the Portable Basketball Goals Contract with Schelde North America LLC for the procurement, delivery and setup of portable basketball goals and associated features and equipment for the Pinnacle Arena for the sum of $38,676.00

Yancey explained that this is the basketball hoops provider. Schelde North America was the most responsive bidder through City Purchasing. An interesting component is that Bison Manufacturing, located here in Lincoln, is the parent company of Schelde and the goals will be manufactured here in Lincoln. The total cost is $38,676 and this is included in the budget. Replying to Carroll, Yancey stated this includes three portable goals as required by the NCAA.

There was no public comment. Clare moved approval of the resolution. Carroll seconded the motion. Motion carried 3-0.

Item 11 -- WH 13-4 Resolution to approve the Contract with NCR Corporation to furnish and install "Point of Service Software and Hardware" for the Arena for the sum of $300,536.82

Yancey relayed that this contract is for the point of sale software and hardware to be awarded to NCR Corporation. This point of sale system includes all of the cash registers, the software, all the interfacing, and the installation of the system to take the orders and collect the money at all the concession stands.

This was bid through City Purchasing with NCR being the most responsive bid that met the specifications. The contract is for $300.536.82 and is within the FFE budget.

Being no public comment on this item, Carroll moved approval of the resolution. Clare seconded the motion. Motion carried 3-0.

Item 12 -- Set Next Meeting Date

The next meeting date is set for Thursday, January 24, 2013 at 3:00 p.m. in City Council Chambers Room 112.

Item 13 -- Motion to Adjourn

Carroll made a motion to adjourn the meeting. Clare seconded the motion. The meeting adjourned at 3:42 p.m.

Prepared by: Pam Gadeken, Public Works and Utilities

West Haymarket JPA Meeting

Date 1/11/2013

Page 1

Name (Please Print)	Address	Phone/E-Mail
Jane Ramsey		

Pinnacle Bank Arena

WEST HAYMARKET REDEVELOPMENT PROJECTS

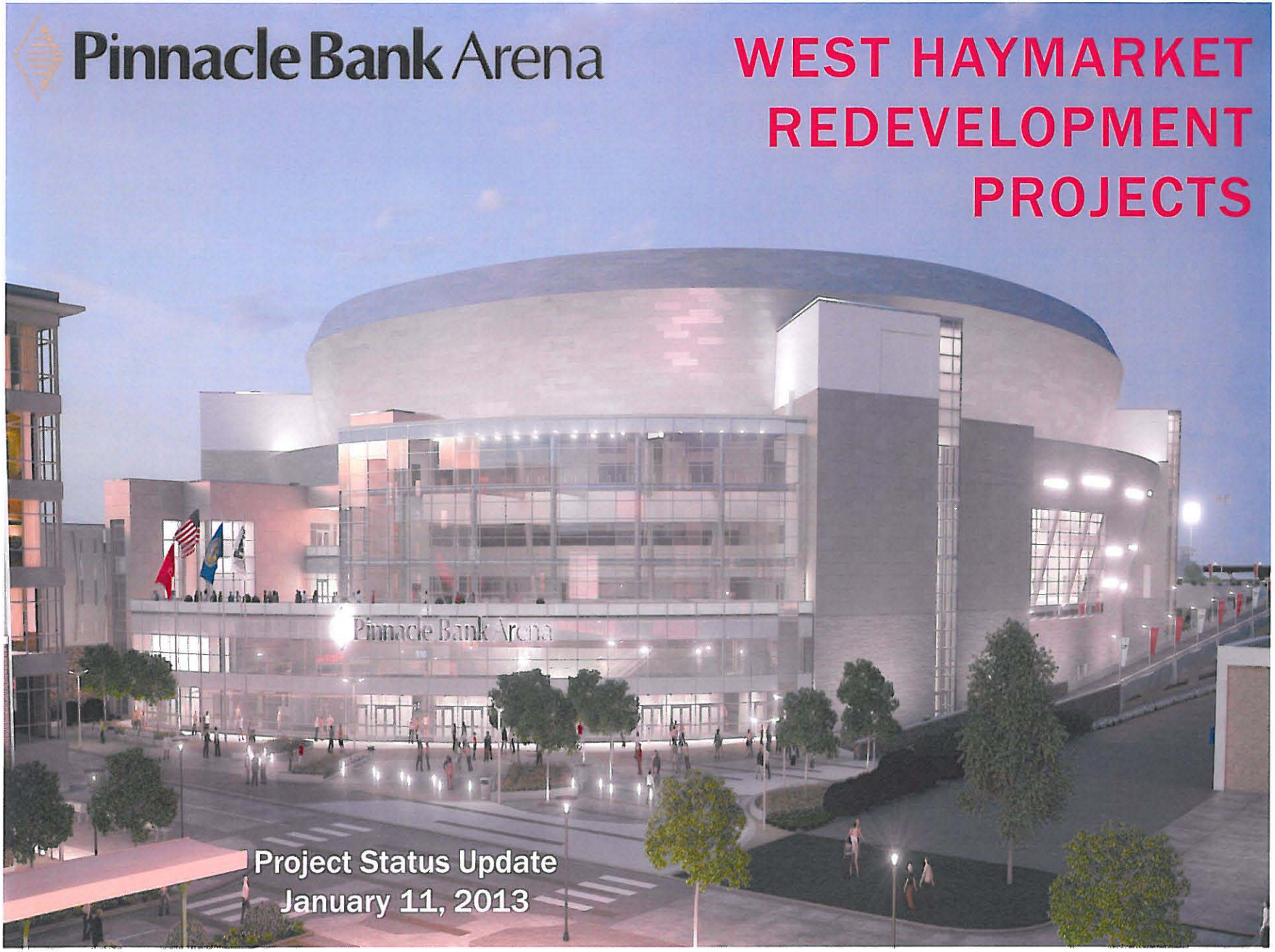

Project Status Update
January 11, 2013

West Haymarket Local Participation Report
All Workers – Including Engineering and Professional Services
Through November/ December 2012

	Total	Percentages
Lincoln/Lancaster County	1303	58%
Nebraska	703	31%
Other	249	11%
	2255	100%

West Haymarket Local Participation Report
Davis Bacon Construction Employees
Through November / December 2012

	Total	Percentages
Lincoln/Lancaster County	1,160	59%
Nebraska	648	33%
Other	166	8%
	1974	100%

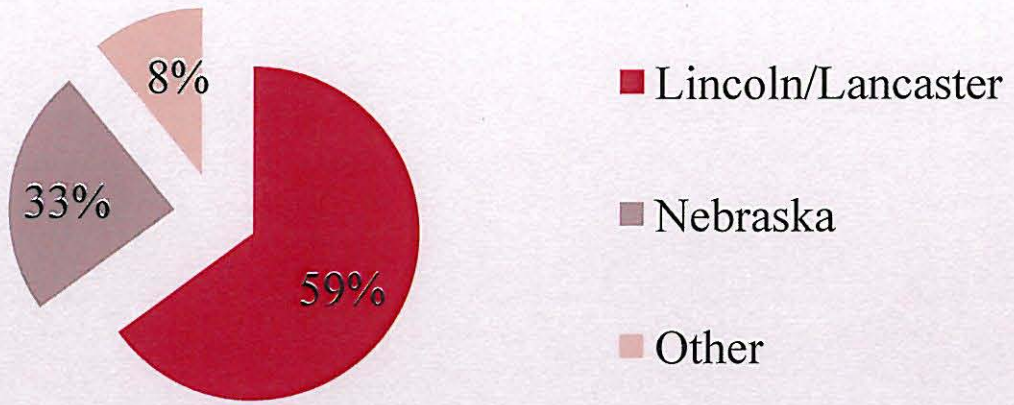

West Haymarket
Company Participation

	Total	Percentage
Nebraska Contracts	253	77%
Other	75	23%
	328	100%

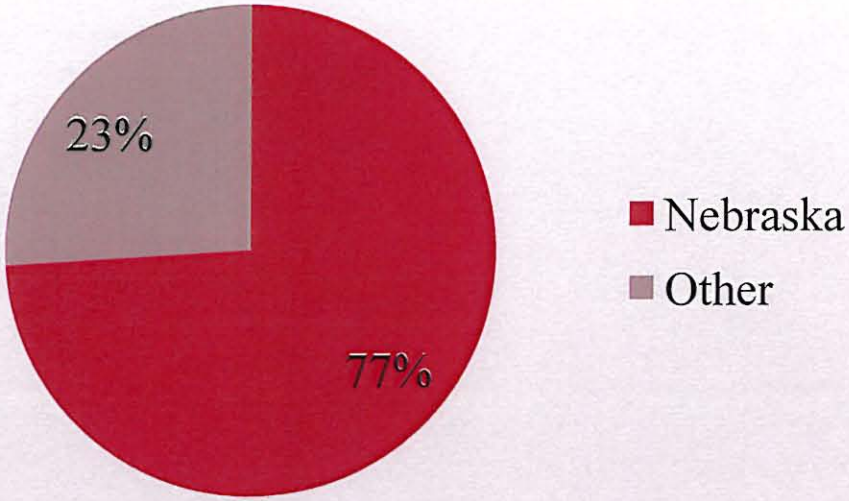

$148 Million
Nebraska Dollars
out of $200 Million

Infrastructure Progress

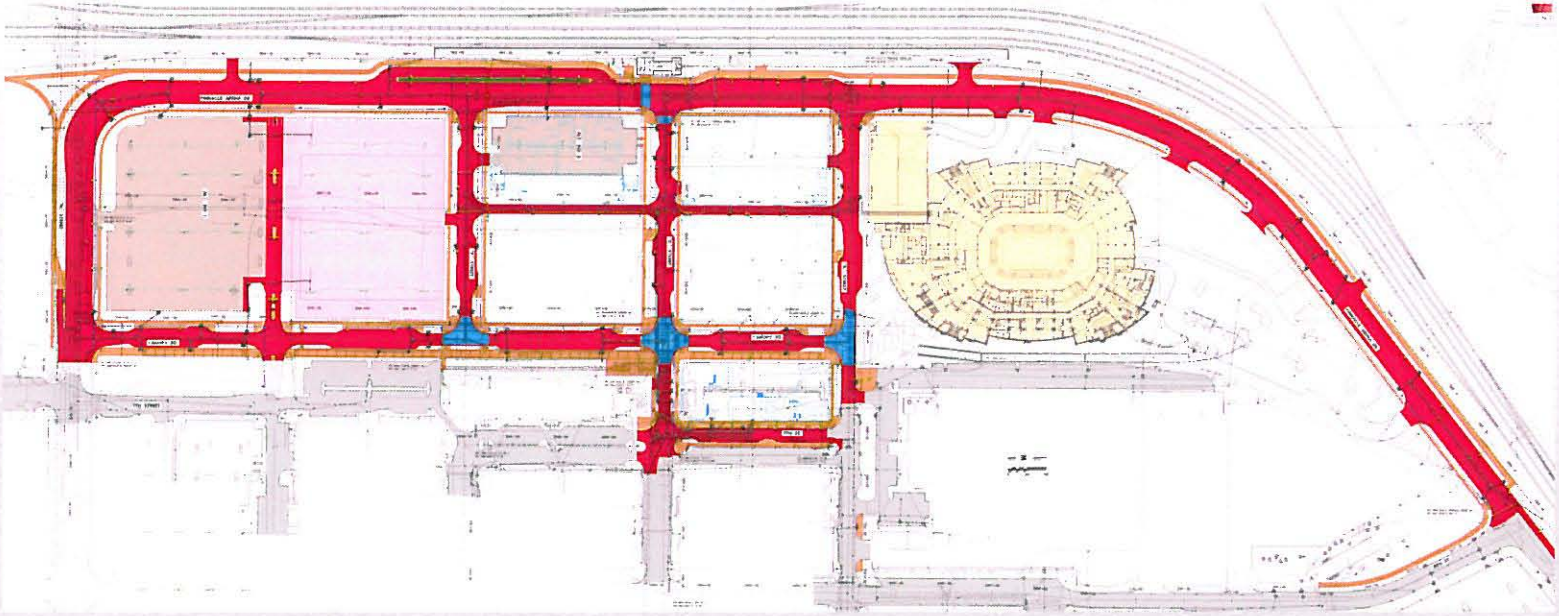

FUTURE PEDESTRIAN BRIDGE LANDING

TDP's CANOPY LOFTS PROJECT

TDP's Railyard PROJECT

ERECTING PRECAST DECK #1 PARKING GARAGE

INSTALLING FOUNDATION PILES FOR PEDESTRIAN BRIDGE PIERS

INSTALLING FOUNDATION PILES FOR PEDESTRIAN BRIDGE PIERS

AERIAL 12-18-2012

AERIAL 12-18-2012

Presentation to the JPA

Pinnacle Bank Arena

January 11, 2013

Mortenson construction | HAMPTON CONSTRUCTION

Safety

- Worked 206 consecutive days without a safety incident
- The Project averages over 300 Craft Workers daily

Mortenson construction | HAMPTON CONSTRUCTION

Concrete Superstructure

- The concrete work continues with inner bowl slab on grade
- Garage Foundations have been completed.

Mortenson construction | HAMPTON CONSTRUCTION

Milestones Achieved

- 2nd Phase of Structural Precast is complete
- Last Tower Crane Removed
- DEC providing heat to Arena
- Interior Stairs have been placed
- Last Elevator Shaft completed
- Started Production Drywall

Mortenson construction | HAMPTON CONSTRUCTION

Fireproofing

Mortenson construction | HAMPTON CONSTRUCTION

Setting Last Pieces of Structural Precast

Detailing Structural Precast

Detailing Structural Precast

Production Drywall

Installing Exterior Studs and Windows

Installing Furring Over Vapor Barrier

Installing Metal Panels

Excavation of Ice Floor Perimeter

Installing Catwalks

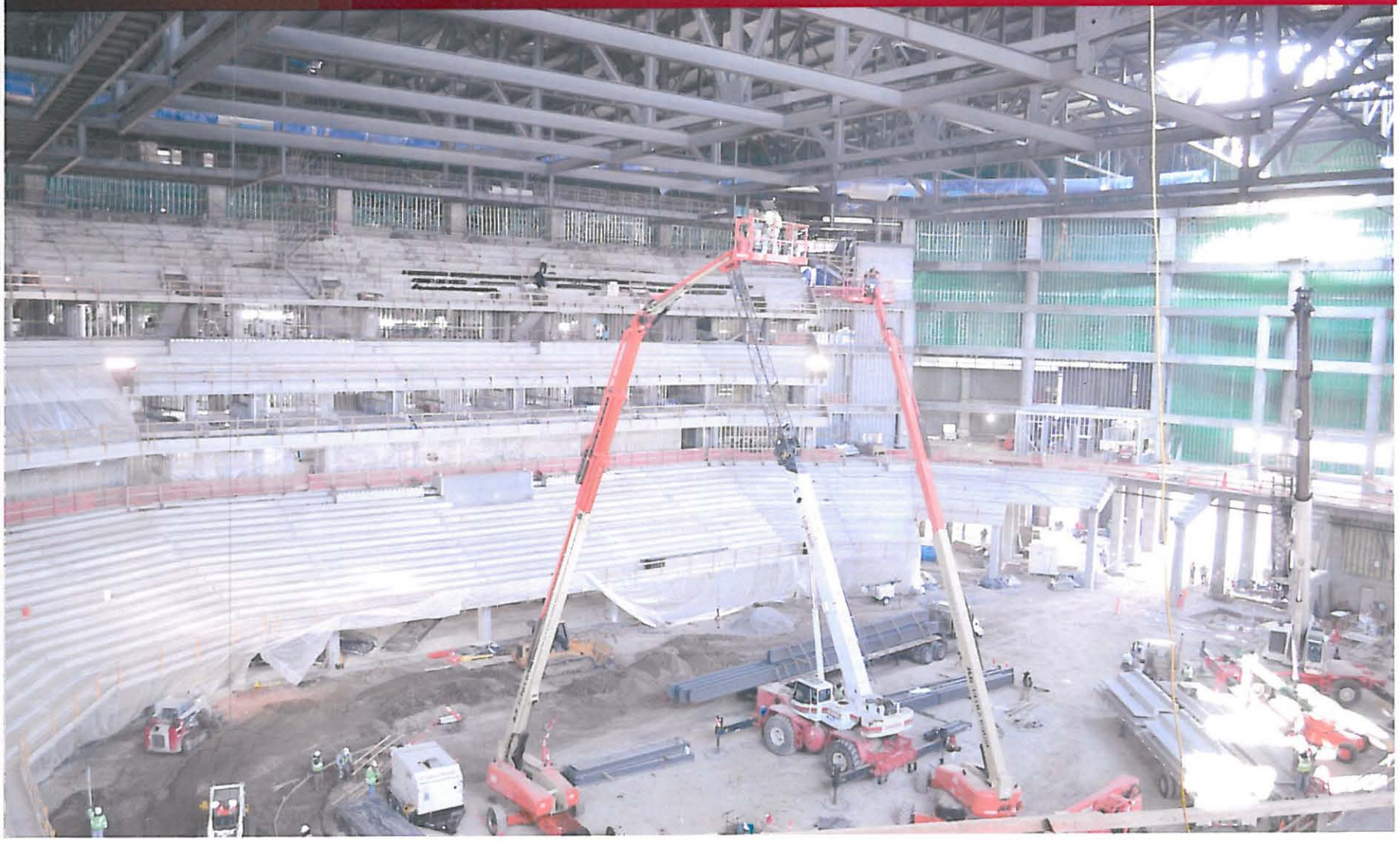

WH 13-6 Introduce: 1-24-13

RESOLUTION NO. WH- _____

BE IT RESOLVED by the Board of Representatives of the West Haymarket Joint Public Agency:

That the attached Amendment No. 2 to the Agreement for Construction Observation and Testing Services for the Arena and Arena Garage between Alfred Benesch & Company and the West Haymarket Joint Public Agency to expand the scope of services of the Agreement to include rescheduling Arena VIP Garage Surcharge due to early removal of BNSF tracks, final reconciliation of Arena Ramp pile foundation design and geotechnical engineering required for certification of the Arena Garage piles for an additional fee of $14,472.00, is hereby approved and the Chairperson of the West Haymarket Joint Public Agency Board of Representatives is hereby authorized to execute said Amendment No. 2 on behalf of the JPA.

The City Clerk is directed to return a fully executed original of Amendment No. 2 to Alfred Benesch & Company, Attn: Gary Proskovec, 825 J Street, Lincoln, NE 68508.

Adopted this _____ day of January, 2013.

Introduced by:

_____

Approved as to Form & Legality:

_____
Legal Counsel for
West Haymarket Joint Public Agency

West Haymarket Joint Public Agency
Board of Representatives

_____
Chris Beutler, Chair

_____
Tim Clare

_____
Eugene Carroll

AMENDMENT NO. 2

TO THE AGREEMENT FOR
SERVICES FOR THE ARENA, ARENA PARKING GARAGE
AND RAMP CONSTRUCTION SITES
between ALFRED BENESCH & COMPANY
and the
WEST HAYMARKET JOINT PUBLIC AGENCY

This Amendment No. 2 is made by and between Alfred Benesch & Company (Benesch) and the West Haymarket Joint Public Agency, hereinafter called JPA, this _____ day of January, 2013 and approved by Resolution No. WH_____.

WHEREAS, it is the mutual desire of the parties hereto to amend the Agreement For Construction Observation and Testing Services for the Arena, Arena Parking Garage and Ramp Construction Sites which was entered into with the JPA on September 1, 2011 by Resolution No. WH00192 to expand the services to include rescheduling Arena VIP Garage Surcharge due to early removal of BNSF tracks, final reconciliation of Arena Ramp pile foundation design and geotechnical engineering required for certification of the Arena Garage piles.

A detailed breakdown of the scope and fee for this amendment is set forth in the Benesch Proposal dated December 27, 2012 attached hereto as Attachment A.

The total estimated fee for completion of the work associated with this Amendment is $14,472.00.

NOW, THEREFORE, it is hereby agreed that the existing Agreement be amended to include the services as described in Attachment A.

This Amendment shall be deemed a part of and shall be subject to all terms and conditions of the existing Agreement. Except as modified above, the existing Agreement shall remain in full force and effect.

West Haymarket Joint Public Agency

_____
Chris Beutler, Chair

Alfred Benesch & Company

_____
Title:

WH 13-7 Introduce: 1-24-13

RESOLUTION NO. WH- _____

BE IT RESOLVED by the Board of Representatives of the West Haymarket Joint Public Agency:

That the attached Addendum to Energy Services Agreement between the West Haymarket Joint Public Agency and District Energy Corporation to provide additional energy services to the West Haymarket Arena and related facilities is hereby approved and the Chairperson of the West Haymarket Joint Public Agency Board of Representatives is hereby authorized to execute said Addendum to Energy Services Agreement on behalf of the JPA.

The City Clerk is directed to return a fully executed original of Amendment No. 2 to Chris Connolly, Assistant City Attorney.

Adopted this _____ day of January, 2013.

Introduced by:

_____

Approved as to Form & Legality:

_____
Legal Counsel for
West Haymarket Joint Public Agency

West Haymarket Joint Public Agency
Board of Representatives

_____
Chris Beutler, Chair

_____
Tim Clare

_____
Eugene Carroll

ADDENDUM TO ENERGY SERVICE AGREEMENT

Between

West Haymarket Joint Public Agency

And

District Energy Corporation

Energy Services to the
West Haymarket Arena

and related facilities

_____ ___, 2013

ADDENDUM TO ENERGY SERVICE AGREEMENT

This Addendum to Energy Service Agreement ("Addendum"), dated _____ ____, 2013, is between West Haymarket Joint Public Agency ("Customer"), and District Energy Corporation ("DEC").

WITNESSETH:

WHEREAS, the Customer and DEC have previously entered into an Energy Service Agreement ("Agreement") pursuant to which DEC is to furnish Energy Services (therein defined) to the Customer at its Arena, located approximately at 5th and "R" Streets, Lincoln, Nebraska ("Premises"), together with such other buildings and facilities as the Customer may designate from time to time; and

WHEREAS, the Customer would like DEC to provide additional service(s) (herein defined) in addition to those set forth in the Agreement; and

WHEREAS, DEC is willing to provide such additional service(s); and

WHEREAS, the Customer and DEC desire that the Agreement as previously entered into remain in full force and effect and that this Addendum be made a part thereof.

NOW THEREFORE, the parties hereby agree that the following provisions shall be added to the Agreement, ARTICLE 5, DELIVERY POINT and ARTICLE 6, PAYMENT AND BILLING, respectively and shall be made a part thereof as if included in the initial Agreement:

ARTICLE 5
DELIVERY POINT

5.02 Service to the Customer will be provided at the Points of Delivery as identified in Exhibit "C".

ARTICLE 6
PAYMENT AND BILLING

6.07 DEC shall provide to the Customer the following services for each Point of Delivery, pursuant to this Agreement:

a. Read each Meter and record such readings on a consistent monthly basis; and

b. Calculate the amount to be billed to each Point of Delivery based upon the most recent Meter reading and the fee schedule provided to DEC by the Customer; and

c. Mail monthly statements for energy services in the amounts calculated pursuant to Section 6.07.b. for each Point of Delivery to the address provided by the Customer .

DEC shall have no responsibility to the Customer for the collection, deposit, application or any amount paid at any Point of Delivery.

IN WITNESS WHEREOF, this Addendum has been executed as of the date first above written.

WEST HAYMARKET JOINT PUBLIC AGENCY

By: _____
Chair

ATTEST:

By:_____
Secretary

DISTRICT ENERGY CORPORATION

By:_____
President

ATTEST:

By: _____
Secretary

EXHIBIT C

District Energy Corporation
West Haymarket Thermal Energy System
Energy Delivery Points

_____ _____, 2013

Pursuant to the Energy Service Agreement and Addendum thereto, District Energy Corporation is to provide thermal energy service(s) as defined in the Agreement to the following addresses from the West Haymarket Thermal Energy Plant located at 550 "P" Street:

Pinnacle Bank Arena
600 "R" St.
Lincoln, NE 68508

Canopy Lofts
Canopy Rd. & "R" St.
Lincoln, NE 68508

Rail Yard
7th St. & "Q" St.
Lincoln, NE 68508

Hyatt Regency Hotel
Canopy Rd. & "Q" St.
Lincoln, NE 68508

Woodbury Building #1
Canopy Rd. & "P" St.
Lincoln, NE 68508

WH 13-8 Introduce: 1-24-13

RESOLUTION NO. WH- _____

BE IT RESOLVED by the Board of Representatives of the West Haymarket Joint Public Agency:

That in order to allow District Energy Corporation ("DEC") to serve additional growth and development in Block 3 and areas south of O Street within the West Haymarket Development area, DEC is authorized to construct and install an expanded distribution system(s) to consist of four pipes from the existing 6th and P Streets manhole to a new manhole located at 6th and O Streets.

Such expansion will total approximately 342 linear feet and will consist of two 24 inch high density polyurethane pipes for the transfer of cold water and two 12 inch insulated, carbon steel pipes for the transfer of hot water, along with associated valves, thermal expansion loops, and pipe anchors to support future customer service connection points.

Such expansion is necessary for DEC to provide energy services to the additional growth and development in the West Haymarket development area and accordingly, such construction and installation by DEC is hereby approved.

Adopted this _____ day of January, 2013.

Introduced by:

_____

Approved as to Form & Legality:

_____

Legal Counsel for
West Haymarket Joint Public Agency

West Haymarket Joint Public Agency
Board of Representatives

_____

Chris Beutler, Chair

_____

Tim Clare

_____

Eugene Carroll

District Energy Corp.

JPA Board of Directors Meeting

January 24, 2013

DEC ENERGY

DEC West Haymarket
District Energy System

DEC WEST HAYMARKET THERMAL ENERGY FACILITY

northeast view - from 'R' street elevated

DEC ENERGY

WHM Project Milestones

✓ Service Agreement Signed:	Oct. 2011
✓ Short Term Financing Obtained:	Nov. 2011
✓ CUP Construction Started:	Feb. 2012
✓ Distribution Construction Started:	Aug. 2012
✓ All Major Equipment Delivered:	Sep. 2012
✓ Arena Piping Completed:	Dec. 2012
✓ Equipment Commissioning Begins:	Dec. 2012
✓ Begin Providing Arena Heating:	Jan. 2013
Begin Providing Arena Cooling:	2nd Q 2013

DEC ENERGY

WHM Outstanding Items

- **Update Service Agreement**
  - Identify Service Points & Billing Process
- **Approval of Distribution System Expansion**
  - Issue Change Order
- **Complete Distribution Construction**
- **Complete Cooling System Commissioning**
- **Purchase & Install Equipment for System Expansion (as required)**
- **Implement Customer Billing Process for JPA**
- **Secure Long Term Financing**

DEC ENERGY

Latest Potential Private Development

Phase 1 – 765,500 sq. ft.: **$16.9 Million**

1 – Arena	460,500 sq. ft.
3 – Canopy Lofts	117,000 sq. ft.
4 – Hotel	135,000 sq. ft.
5 – Rail Yard	53,000 sq. ft.

Phase 2 – Piping Extension: **$0.83 Million**

(From 6th & P to 6th & O)

Phase 3 – Additional Equip.: **$0.99 Million**

Block 3

13 – Woodbury	80,000 sq. ft.
Tentative	100,000 sq. ft.
Additional Future	200,000 sq. ft.

Phase 1, 2, & 3 Construction	**$18.72 Million**
Phase 1,2, & 3	**1,145,000 sq. ft.**

***All costs are direct construction costs**

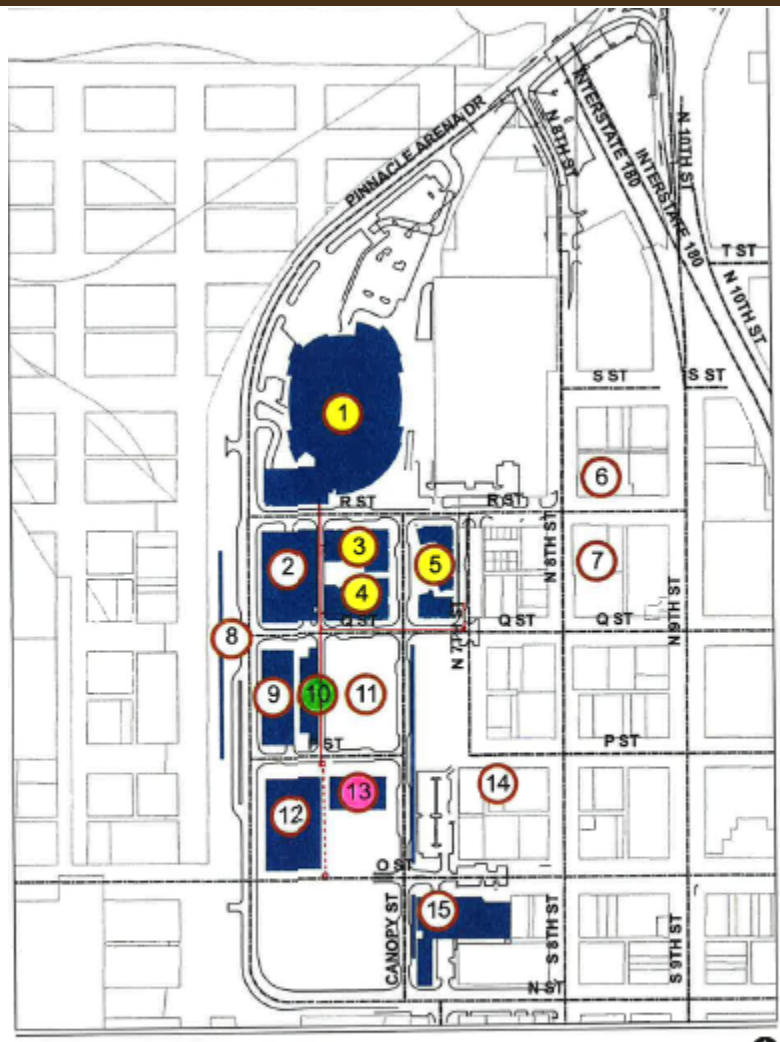

Facility Buildout Timeline

ID	Project	Timeline
1	Pinnacle Bank Arena	Sept. 2013
2	North Garage	Sept. 2013
3	Canopy Lofts	Aug. 2013
4	Hotel	2014
5	The Rail Yard	Dec. 2013

ID	Project	Timeline
6	Courtyard	Opened. Oct 2012
7	Toolhouse	Summer 2013
8	Amtrack	Opened. Aug 2012
9	Center Garage	TBD
10	DEC	Aug. 2013

ID	Project	Timeline
11	Development	TBD
12	South Garage	Jun. 2014
13	Woodbury Dev.	Summer 2014
14	B&J Project	TBD
15	LumberWorks	Oct. 2013

DEC Distribution

DEC ENERGY

West Haymarket S Curve

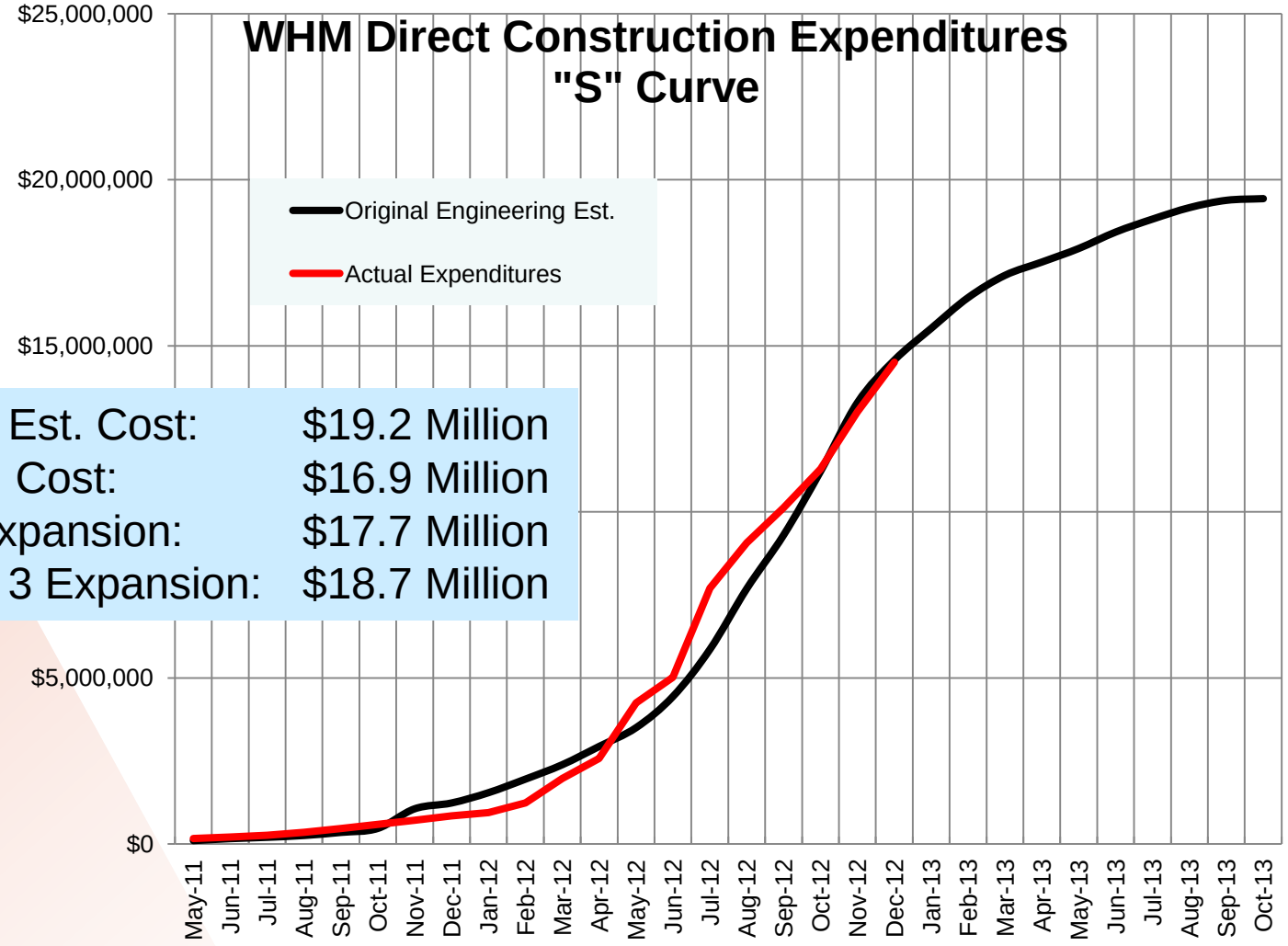

Original Engineering Est. Cost:	$19.2 Million
Phase 1 Forecasted Cost:	$16.9 Million
Forecast Phase 2 Expansion:	$17.7 Million
Forecast Phase 2 & 3 Expansion:	$18.7 Million

DEC ENERGY

Arena Entrance Piping

Pier caps required 750 yards of concrete

Canopy Lofts Service
Connection Headers

As of 4/11/2012

West Haymarket
Distribution Corridor

Required 97 truck loads of “spoils” taken to N 48th Street Landfill

Air Separator/Filter

System increases pumping efficiency

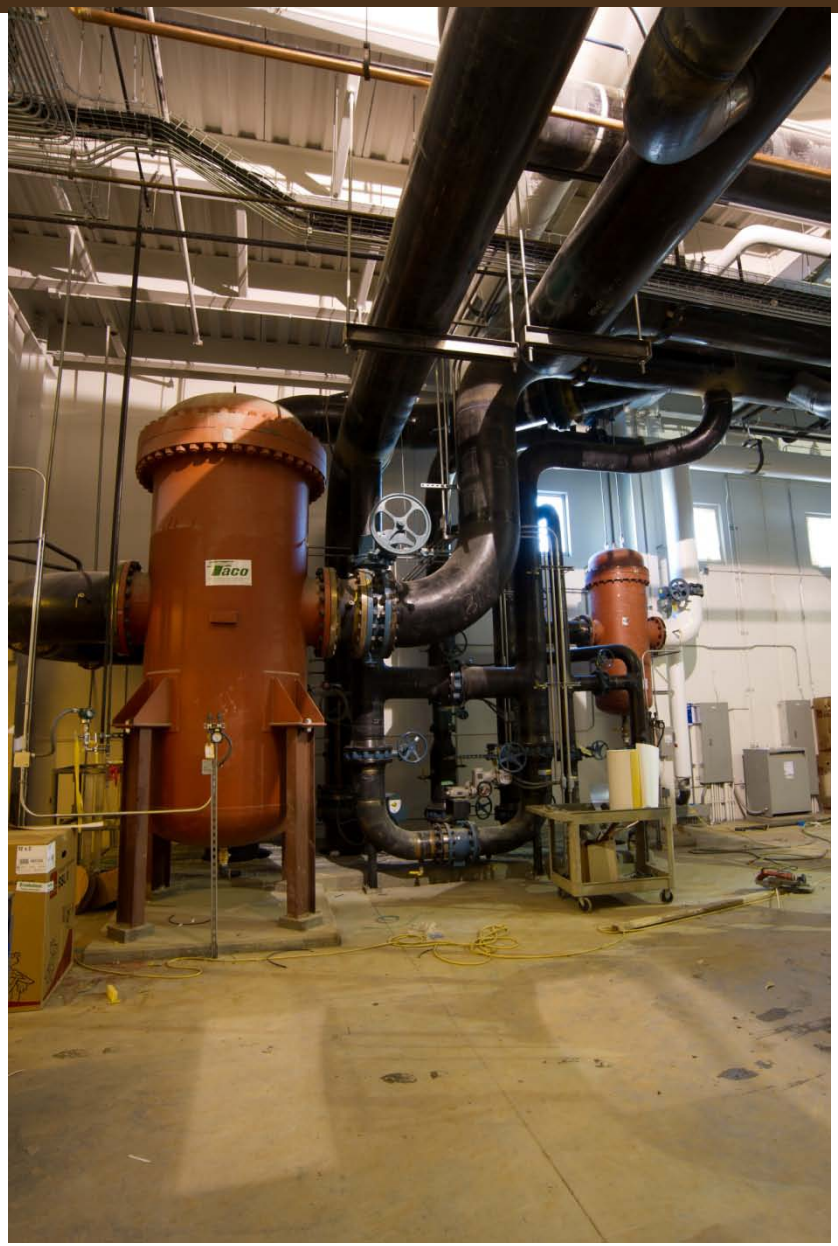

DEC ENERGY

Chillers

Chillers were load tested at factory.
Final check out waiting on customer cooling load.

Cooling Tower “Free Cooling” System

System allows use of roof mounted cooling towers instead of chillers for providing chilled water during periods of low ambient temperatures

Second Floor Expansion Area

Space can support same amount of equipment as ground floor or thermal energy storage system.

Emergency Generator

1000 kW generator can keep heating system running if plant losses LES service

Natural Gas Boilers

Natural gas boilers commissioned and supplying service to arena

Electrical Boilers

Electric Boilers provide emergency back and alternate fuel source

DEC ENERGY

Central Utility Plant

Note start of parking garage construction to right of plant

Central Utility Plant

DEC Central Utility Plant (left), parking garage elevator tower (center), Canopy Lofts construction (in front of arena)

Thank You

Comments/Questions

DEC ENERGY

WH 13-9 Introduce: 1-24-13

RESOLUTION NO. WH- _____

BE IT RESOLVED by the Board of Representatives of the West Haymarket Joint Public Agency:

That the Contract Agreement between the West Haymarket Joint Public Agency and TMCO, Inc. Metal & Art Division, pursuant to Bid No. 13-007, for procurement, delivery and setup of Custom Copper Top Bar Height Tables for the sum of $45,688.65 is hereby approved and the Chairperson of the West Haymarket Joint Public Agency Board of Representatives is hereby authorized to execute said Contract Agreement on behalf of the West Haymarket Joint Public Agency.

The City Clerk is directed to return a fully executed original Contract Agreement and a copy of this Resolution to Rick Peo, Chief Assistant City Attorney, for transmittal to TMCO, Inc.

Adopted this _____ day of January, 2013.

Introduced by:

_____

Approved as to Form & Legality:

_____
Legal Counsel for
West Haymarket Joint Public Agency

West Haymarket Joint Public Agency
Board of Representatives

_____
Chris Beutler, Chair

_____
Tim Clare

_____
Eugene Carroll

WEST HAYMARKET JOINT PUBLIC AGENCY (JPA)

CUSTOM COPPER TOP BAR HEIGHT TABLES

THIS CUSTOM COPPER TOP BAR HEIGHT TABLES CONTRACT ("Contract") is made and entered into as of this _____ day of _____, 2013, by and between **TMCO, INC., Metal & Art Division,** hereinafter called "Provider," and the **WEST HAYMARKET JOINT PUBLIC AGENCY**, hereinafter called "JPA."

RECITALS

WHEREAS, JPA has caused to be prepared, in accordance with law, Specifications and other Contract Documents for the procurement, delivery and setup of the custom copper top bar height tables herein described, including the delivery and setup, and has approved and adopted said documents and has caused to be published an Notice to Bidders advertisement for and in connection with the Contract.

WHEREAS, the Provider, in response to such advertisement, has submitted to the JPA, in the manner and in the time specified, a sealed Supplier Response in accordance with the terms of said advertisement and the Specifications.

WHEREAS, JPA, in the manner prescribed by law, has publicly advertised, opened, examined, and canvassed the Supplier Responses submitted in response to such advertisement, and as a result of such canvass has determined and declared the Provider to be the lowest and best bidder for the furnishing, delivery and setup of the custom copper top bar height tables for the sum of Forty-Five Thousand Six Hundred Eighty-Eight and 65/100ths Dollars ($45,688.65). Copies of the Bid Opportunity Detail, Notice to Bidders, Specifications, and Supplier Response (collectively "Bid Documents") are attached hereto as Exhibit A.

WHEREAS, JPA desires to engage Provider for the procurement, delivery and setup of the custom copper top bar height tables on the terms and conditions herein provided.

WHEREAS, Provider hereby represents that Provider is willing and able to furnish, deliver and setup the custom copper top bar height tables in accordance with this Contract.

NOW, THEREFORE, in consideration of the above Recitals and the below mutual covenants and agreements the Parties hereto, the Provider and JPA do hereby agree as follows:

SCOPE OF SERVICES. The Provider shall procure, deliver, and setup the custom copper top bar height tables as described in the Specifications prepared by the JPA and shall do everything required by this Contract. Provider shall furnish all labor, materials, equipment, services, shipping, loading, packing and cleanup that are necessary for the Provider's performance of this Contract.

COMPENSATION. JPA agrees to pay to Provider for the procurement, delivery and setup of the custom copper top bar height tables the sum of $45,688.65 set forth in the Supplier Response and Provider agrees to accept said amount as full compensation therefor. Provider represents that the $45,688.65 includes Provider's payment for any and all royalties or costs arising from patents, trademarks, copyrights, and other similar intangible rights in any way involved with or related to the custom copper top bar height tables or this Contract. Provider shall defend suits on claims for infringement or any patent, copyright, trademark or other intangible rights in any way related to this Contract.

TIME OF COMPLETION. The furnishing and ordering of the custom copper top bar height tables under this Contract shall be commenced as soon as possible and said custom copper top bar height tables shall be delivered no earlier than July 1, 2013 and no later than September 1, 2013. Failure to meet the terms of the Contract on or before the Completion Date may result in forfeiture of the supply bond or deposit if any and shall be deemed a breach of this Contract.

INDEMNIFICATION. Provider agrees to defend, indemnify and hold harmless JPA to the same extent and under the same terms and conditions as required by the Indemnification and Insurance Requirements for All West Haymarket Joint Public Agency Contracts attached hereto as Exhibit B.

INSURANCE. Provider shall at all times during the term of this Contract purchase and maintain in place insurance coverage as required by the Indemnification and Insurance Requirements for All West Haymarket Joint Public Agency Contracts attached hereto as Exhibit B, except that the required commercial general liability coverage shall be reduced to $1,000,000 per occurrence and $2,000,000 aggregate. Provider agrees to provide all types of insurance required by the JPA. Provider will furnish coverages against any and all perils required by the JPA.

NON-RAIDING CLAUSE. Provider shall not engage the services of any person or persons presently in the employ of the JPA for work covered by this Contract without the written consent of the JPA.

TERMINATION OF CONTRACT.

A. This Contract may be terminated by the Provider if the JPA fails to adequately perform any material obligation required by this Contract ("Default"). Termination rights under this paragraph may be exercised only if the JPA fails to cure a Default within ten (10) calendar days after receiving written notice from the Provider specifying the nature of the Default.

B. The JPA may terminate this Contract, in whole or part, for any reason for the JPA's own convenience upon at least ten days written notice to the Provider.

If the Contract is terminated by either the JPA or Provider as provided in A or B above, Provider shall be paid for all services performed, and reimbursable expenses incurred, not to exceed the above-mentioned Contract amount, up until the date of termination.

Provider hereby expressly waives any and all claims for damages or compensation arising under this Contract except as set forth in this paragraph in the event of termination.

FAIR EMPLOYMENT. In connection with the performance of work under this Contract, Provider agrees that it shall not discriminate against any employee or applicant for employment with respect to compensation, terms, advancement potential, conditions, or privileges of employment, because of such person's race, color, religion, sex, disability, national origin, ancestry, age, or marital status in accordance with the requirements of Lincoln Municipal Code Chapter 11.08 and Neb. Rev. Stat. § 48-1122, as amended.

FAIR LABOR STANDARDS. The Provider shall maintain Fair Labor Standards in the performance of this Contract as required by Chapter 73, Nebraska Revised Statues, as amended.

ASSIGNABILITY. The Provider shall not assign any interest in this Contract, delegate any duties or work required under this Contract, or transfer any interest in the same (whether by assignment or novation), without the prior written consent of the JPA thereto; provided, however, that claims for money due or to become due to the Provider from JPA under this Contract may be assigned without such approval, but notice of any such assignment shall be furnished promptly to the JPA.

INTEREST OF PROVIDER. Provider covenants that Provider presently has no interest, including but not limited to, other projects or independent contracts, and shall not acquire any such interest, direct or indirect, which would conflict in any manner or degree with the performance of services required to be performed under this Contract. Provider further covenants that in the performance of this Contract, no person having any such interest shall be employed or retained by Provider under this Contract.

INDEPENDENT CONTRACTOR. The JPA is interested only in the results produced by this Contract. Provider has sole and exclusive charge and control of the manner and means of performance. Provider shall perform as an independent contractor and it is expressly understood and agreed that Provider is not an employee of the JPA and is not entitled to any benefits to which JPA employees are entitled, including, but not limited to, overtime, retirement benefits, workmen's compensation benefits, sick leave and/or injury leave.

NEBRASKA LAW. This Contract shall be construed and interpreted according to the laws of the State of Nebraska.

INTEGRATION. This Contract represents the entire agreement between the parties and all prior negotiations and representations are hereby expressly excluded from this Contract.

AMENDMENT. This Contract may be amended or modified only in writing signed by both the JPA and Provider.

SEVERABILITY. If any provision of this Contract shall be held to be invalid or unenforceable for any reason, the remaining provisions shall continue to be valid and enforceable. If a court finds that any provision of this Contract is invalid or unenforceable, but that by limiting such provision it would become valid and enforceable, then such provision shall be deemed to be written, construed, and enforced as so limited.

WAIVER OF CONTRACTUAL RIGHT. The failure of either party to enforce any provision of this Contract shall not be construed as a waiver or limitation of that party's right to subsequently enforce and compel strict compliance with every provision of this Contract.

FEDERAL IMMIGRATION VERIFICATION.

A. If the Provider is a business entity or corporation, then in accordance with Neb. Rev. Stat. §§ 4-108 through 4-114, the Provider agrees to register with and use a federal immigration verification system, to determine the work eligibility status of new employees performing services within the State of Nebraska. A federal immigration verification system means the electronic verification of the work authorization program of the Illegal Immigration Reform and Immigrant Responsibility Act of 1996, 8 USC 1324 a, otherwise known as the E-Verify Program, or an equivalent federal program designated by the United States Department of Homeland Security or other federal agency authorized to verify the work eligibility status of a newly hired employee pursuant to the Immigration Reform and Control Act of 1986. The Provider shall not discriminate against any employee or applicant for employment to be employed in the performance of this section pursuant to the requirements of state law and 8 U.S.C.A. 1324b. The Provider shall require any subcontractor to comply with the provisions of this section. For information on the E-Verify Program, go to www.uscis.gov/everify.

B. If the Provider is an individual or sole proprietor, the Provider agrees to complete the United States Citizenship Attestation Form as provided by the JPA and attach it to the Contract.

C. Public Benefits Eligibility Status Check. If the Provider is agreeing to determine eligibility for and provide a public benefit as public benefit is defined under Neb. Rev. Stat. §§ 4-108 through 4-114, the Provider agrees to have each applicant for public benefits attest that he or she is a U.S. citizen or qualified alien using the form attached. The Provider agrees to register and use the SAVE Program as required under Neb. Rev. Stat. §§4-108 through 4-114. If the applicant indicates he or she is an alien, the Provider shall verify the applicant's lawful presence in the United States as provided under the SAVE Program and retain all documentation and provide copies of such documentation at the JPA's request. For information on the SAVE program, go to www.uscis.gov/SAVE.

CONTRACT DOCUMENTS. The Contract Documents comprise the Contract and consist of the following, whether or not attached hereto:

1. Bid Documents – Exhibit A.
2. Indemnification and Insurance Requirements for all West Haymarket Joint Public Agency Contracts (approved March 2012) - Exhibit B.
3. Supply Bond – Exhibit C.
4. Other Non-Attached Contract Documents:
    a. Sales Tax Exempt Forms (to be provided upon award of the Special Purchase).
        i. Form of Nebraska Resale or Exempt Sales Certificate.

ii. Form of Purchasing Agent Appointment.
Note: Any portion of this project used for providing water service, such as pipe for water mains, are not tax exempt and are subject to sales and use tax.
Note: The remainder of this project, including items exclusively used for providing fire protection, such as fire hydrants, is exempt from sales and use tax.

b. Any Bid Documents and/or Bid Attachments listed in the Bid Opportunity Detail not attached as part of Exhibit A.

This Contract, together with the other Contract Documents herein above mentioned, form this Contract and they are as fully a part of the Contract as if hereto attached or herein repeated.

The Contractor and JPA hereby agree that all the terms and conditions of this Contract shall, by these presents, be binding upon themselves, and their heirs, administrators, executors, legal and personal representatives, successors, and assigns.

REPRESENTATIONS. Each party hereby certifies, represents and warrants to the other party that the execution of this Contract is duly authorized and constitutes a legal, valid and binding obligation of said party.

IN WITNESS WHEREOF, Provider and JPA do hereby execute this Contract as of the Execution Date set forth above.

PROVIDER: **TMCO, INC., Metal & Art Division**

By: _____
Title: _____

JPA: **WEST HAYMARKET JOINT PUBLIC AGENCY**

By: _____
Chris Beutler, Chairperson of the West Haymarket Joint Public Agency Board of Representatives

EXHIBIT A

Bid Documents

Approved by Law
1-15-2013

Return to Login • Supplier Registration

Bid Opportunity Detail

Bid Number 13-007 (Custom Copper Top Bar Height Tables for Pinnacle Bank Arena)
Close Date & Time 1/3/2013 12:00:00 PM Central
Bid Duration 22 days 2 hours 28 minutes 43 seconds

Bid Information

Bid Type	Bid
Issue Date & Time	12/12/2012 9:31:16 AM Central
Close Date & Time	1/3/2013 12:00:00 PM Central
Bid Status	Unsealed
Bid Notes	

Contact Information

Contact Name	Vince Mejer Purchasing Agent
Address	Purchasing 440 S. 8th St. Lincoln, NE 68516 USA
Department	Purchasing
Floor/Room	Suite 200
Contact Phone	1 (402) 441-8314
Contact Fax	1 (402) 441-6513
Contact Email	vmejer@lincoln.ne.gov

Bid Documents

Document	Format	Description
Invitation Document	Adobe (PDF)	PDF Invitation to Bid
Bid Tabulation by Supplier Spreadsheet	Spreadsheet (XLS)	Bid Tabulation by Supplier Spreadsheet
Bid Tabulation by Line Item Spreadsheet	Spreadsheet (XLS)	Bid Tabulation by Line Item Spreadsheet

Bid Attachments

Location	File Name	Description
Header	13-007 Notice.pdf (9KB)	Notice to Bidders
Header	Copper Table Drawing.pdf (59KB)	Copper Table Drawing
Header	13-007_Spec.pdf (98KB)	13-007 Specifications

EXHIBIT A TO CONTRACT AGREEMENT

Advertise 1 time
Friday, December 14, 2012

City of Lincoln/Lancaster County
Purchasing Division
NOTICE TO BIDDERS

Sealed bids will be received by the Purchasing Agent of the City of Lincoln/Lancaster County, Nebraska **BY ELECTRONIC BID PROCESS** until: **12:00 p.m, Thursday, January 3, 2013** for the following project:

Custom Copper Top Bar Height Tables for Pinnacle Bank Arena
Bid No. 13-007

Bidders must be registered on the City/County's E-Bid site in order to respond to the above Bid. To Register go to: lincoln.ne.gov (type: e-bid - in search box, then click "Supplier Registration")

Once registered, vendors will receive e-mail bid notification, first acknowledging registration, then approval of registration. Upon e-mail notification of registration approval, you may go to the E-Bid site to respond to this bid. Questions concerning this bid process may be directed to City/County Purchasing at (402) 441-8314 or (402) 441-7410 or vmejer@lincoln.ne.gov

EXHIBIT A TO CONTRACT AGREEMENT

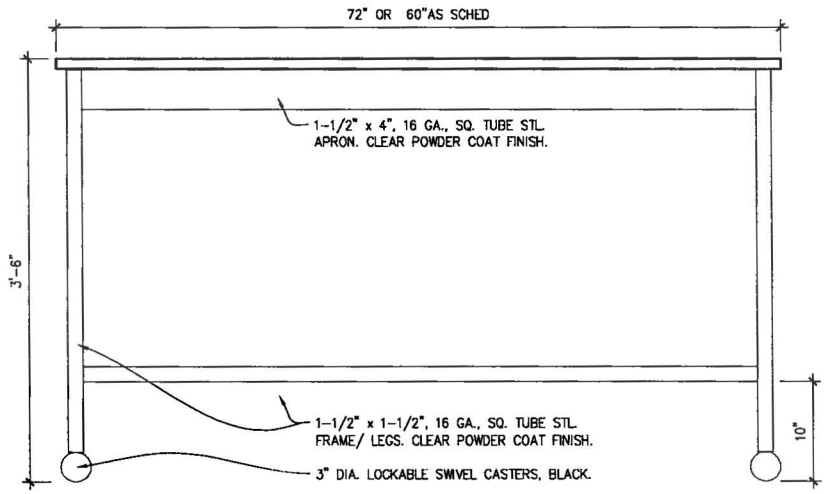

1 FFE SIDE ELEVATION

SCALE: 1" = 1'-0"

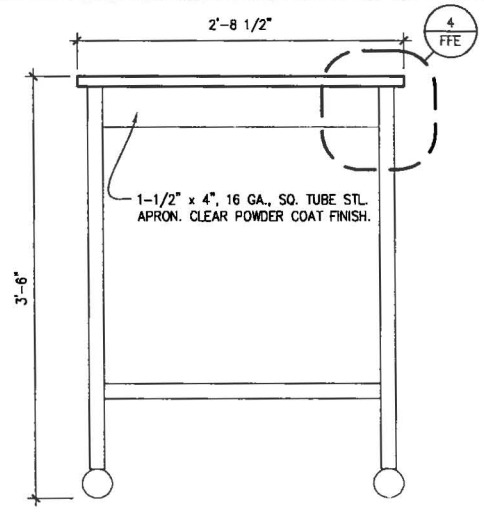

2 FFE FRONT ELEVATION

SCALE: 1" = 1'-0"

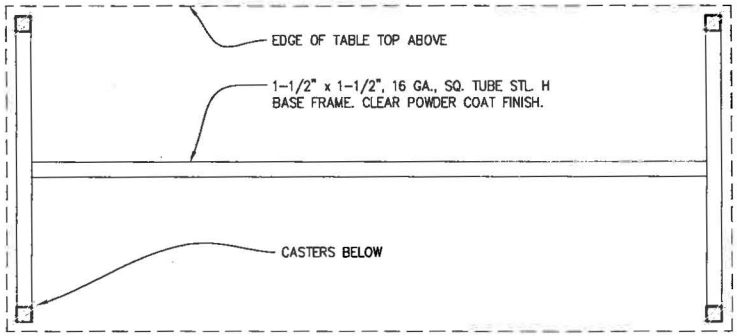

3 FFE H FRAME BASE DETAIL- PLAN

SCALE: 1" = 1'-0"

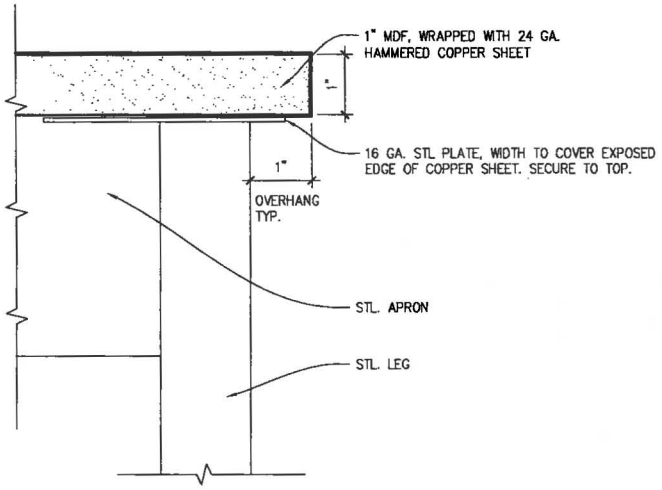

4 FFE HAMMERED COPPER TOP DETAIL

SCALE: NTS

CUSTOM COPPER TOP BAR HEIGHT TABLE
PINNACLE BANK ARENA
FIXTURES, FURNITURE, AND EQUIPMENT

FFE
10-10124-08
12-10-12

DLR Group
Architecture Engineering Planning Interiors

P:\10-10124-08\+Design\m\FURNITURE\Suite Furniture\COPPER TABLE DRAWING.dwg
Dec 10, 2012 3:45pm - mlindberg

EXHIBIT A TO CONTRACT AGREEMENT

CUSTOM COPPER TOP BAR HEIGHT TABLES
FOR
PINNACLE BANK ARENA

SPECIFICATIONS
BID NO.: 13-007

1. **TABLES**
   - 1.1 The successful Bidder shall furnish all labor, materials and equipment necessary to perform and complete the work called for in the specifications.
   - 1.2 The Bidder understands that all materials furnished shall be new and the best of their respective kinds, unless otherwise specified.
   - 1.3 This specification is used to establish the minimum acceptable standards for the custom tables.
   - 1.4 Submittals
     - 1.4.1 The successful bidder will be required to provide product data and shop drawings for review and approval.
     - 1.4.2 Samples for Initial Selection.
     - 1.4.3 Samples for Verification.
     - 1.4.4 The successful bidder will be required to provide "Care and Maintenance" Guide to the owner or individuals in charge and responsible for the upkeep of the tables.

2. **SCOPE OF WORK**
   - 2.1 The Scope of Work shall include, but not be limited to the following:
     - 2.1.1 Provide shop drawings for the custom tables.
     - 2.1.2 Fabricate custom tables.
     - 2.1.3 Delivery and installation.
     - 2.1.4 All other components as described herein.

3. **60" W X 32.5" D X 42" H CUSTOM COPPER TOP TABLE (QUANTITY – 9)**
   - 3.1 Table Top:
     - 3.1.1 Wrapped 24 Gauge Bright Hammered Copper Top finish coat – waxed with a paste wax.
     - 3.1.2 1.0" overhang.
     - 3.1.3 16 Gauge steel plate, width to cover exposed edge of copper sheet and secured to top.
   - 3.2 Table Frame:
     - 3.2.1 1-1/2" X 1-1/2", 16 Gauge Tube Steel Legs and Crossbars.
     - 3.2.2 1-1/2" x 4" 16 Gauge square tube steel (all sides).
     - 3.2.3 Clear powder coat finish.
   - 3.3 Casters:
     - 3.3.1 Black lockable swivel casters to be four (4) 3.0" in diameter with side wheel brake, threaded in to welded-in plugs.
     - 3.3.2 Casters to have a five (5) year minimum warranty.

EXHIBIT A TO CONTRACT AGREEMENT

3.4 Warranty

3.4.1 Warranty shall be five (5) years on all parts and labor.

3.4.2 A permanent label shall be affixed to the underside of the tabletop and shall state the manufacturer's name, address, phone number, standard warranty and exclusions.

4. **72" W X 32.5" D X 42" H CUSTOM COPPER TOP TABLE (QUANTITY – 27)**

4.1 Table Top:

4.1.1 Wrapped 24 Gauge Bright Hammered Copper Top finish coat - waxed with a paste wax.

4.1.2 1.0" overhang.

4.1.3 16 Gauge steel plate, width to cover exposed edge of copper sheet and secured to top.

4.2 Table Frame:

4.2.1 1-1/2" X 1-1/2", 16 Gauge Tube Steel Legs and Crossbars.

4.2.2 1-1/2" x 4" 16 Gauge square tube steel (all sides).

4.2.3 Clear powder coat finish.

4.3 Casters:

4.3.1 Black lockable swivel casters to be four (4) 3.0" in diameter with side wheel brake, threaded in to welded-in plugs.

4.3.2 Casters to have a five (5) year minimum warranty.

4.4 Warranty

4.4.1 Warranty shall be five (5) years on all parts and labor.

4.4.2 A permanent label shall be affixed to the underside of the tabletop and shall state the manufacturer's name, address, phone number, standard warranty and exclusions.

5. **COMPANY INFORMATION**

5.1 Provide company history in the specialty fabrication, including years of operation and client/employee growth.

5.2 Provide information on three (3) recent projects of similar size or scope that have completed by your company.

5.2.1 Provide the project name and a client point of contact for each with name, title, and address and phone number.

5.3 Describe the firm's ability to support the schedule and delivery requirements. Describe the firm's customer support program for resolution of warranty items.

6. **PROJECT DESCRIPTION AND CONSTRUCTION TEAM**

6.1 Owner: West Haymarket JPA (Joint Public Agency)

6.2 JPA Program Manager: PC Sports

6.3 Arena Operator: SMG Management / SAVOR

6.4 Project Architect: DLR Group

6.5 Arena Contractor: Mortenson Construction

6.6 Project location:
Pinnacle Bank Arena
600 R Street
Lincoln, NE 68508

6.7 Type of Construction:

6.7.1 The project consists of a 16,000 seat arena of approximately five levels to include Event Level, Main Concourse, Premium Suite Level, Upper Concourse and the catwalk level.

6.7.2 The attached garage is approximately 280 spaces and is a three-level precast structure.

7. **QUALIFICATIONS**

7.1 All proposers must state the location that the proposed products are manufactured, assembled or produced.

7.2 The manufacturer must have an established reputation in the line with the equipment proposed.

7.3 All Vendors submitting bids must comply with the attached insurance requirements.

7.4 All attachment to any items shall be attached to the Response Attachments Section of the E-bid.

8. **SHIPMENT OF PRODUCT**

8.1 Shipment of product is to be coordinated with the Arena Operator, PC Sports and Mortenson Construction.

8.2 Product delivery date will be confirmed with the Arena Contractor and Owner.

8.3 Pinnacle Bank Arena, 600 R Street, Lincoln, NE 68508.

8.4 Delivery shall be no earlier than July 1, 2013 and no later than September 1, 2013.

9. **SECURITY**

9.1 Access will be restricted only to those having business on the site.

10. **USE OF WORK AREA**

10.1 Delivery of supplies, equipment and/or materials to the site shall be along routes designated by the Arena Contractor or Arena Operator.

10.2 The Vendor must obtain prior approval from the Owner or his representative of areas proposed for temporary storage, stockpiling, equipment, maintenance or operations.

10.3 Working areas shall be chosen by the Owner or his representative in cooperation with the Arena Contractor.

10.4 The Vendor will be responsible for removing any debris associated with this work.

10.5 The Vendor shall be responsible for repairing, at no cost to the Owner, all damages caused by the work of the Contract.

11. **DISCREPANCIES AND OMISSIONS**

11.1 The Vendor finding discrepancies in, or omissions from the drawings, specifications or other documents, or having any doubt as to meaning or intent of any part thereof, shall at once notify the JPA's Purchasing Agent in writing, he will send written instructions in the form of an Addendum.

11.2 Direct inquiries to:

Vince M. Mejer
440 S. 8th Street, Suite 200
Fax: 402.441.6513
VMejer@lincoln.ne.gov

12. **BID SUBMITTAL REQUIREMENTS**

12.1 Vendor shall submit bid documents and all supporting material via E-bid.

12.2 All inquiries regarding these specifications shall be directed to Vince Mejer, Purchasing Agent, via e-mail request to vmejer@lincoln.ne.gov or fax requests to 402-441-6513.

12.2.1 These inquiries and/or responses shall be distributed to prospective Vendors electronically as addenda.

12.2.2 The Purchasing Office shall only reply to written inquiries received within five (5) calendar days of bid opening.

12.3 No direct contact is allowed between Vendor and other City or JPA Staff through the bid process.

12.3.1 Failure to comply with this directive may result in the Vendor bid being rejected.

13. **VENDORS**

13.1 Bidders shall list the names of any Sub-vendors upon whose proposals this bid is based.

13.2 We recognize that the list of Sub-vendors shall be considered in the selection of the successful bidder.

13.3 Bids will not be accepted unless accompanied by a complete list of Sub-vendors and that no names either of Subcontractors, Contractor or "Own Forces" may be changed after submission of bid, unless good and sufficient cause is submitted in writing and written approval received from the Owner and Consultant.

13.4 The list of Sub-vendors shall be attached to the Response Attachments section of the E-bid system.

City of Lincoln/Lancaster County (Lincoln Purchasing)
Supplier Response

Bid Information		Contact Information		Ship to Information
Bid Creator	Vince Mejer Purchasing Agent	Address	Purchasing 440 S. 8th St. Lincoln, NE 68516	Address
Email	vmejer@lincoln.ne.gov			
Phone	1 (402) 441-8314	Contact	Vince Mejer Purchasing Agent	Contact
Fax	1 (402) 441-6513			
		Department	Purchasing	Department
Bid Number	13-007	Building		Building
Title	Custom Copper Top Bar Height Tables for Pinnacle Bank Arena	Floor/Room	Suite 200	Floor/Room
		Telephone	1 (402) 441-8314	Telephone
Bid Type	Bid	Fax	1 (402) 441-6513	Fax
Issue Date	12/12/2012	Email	vmejer@lincoln.ne.gov	Email
Close Date	1/3/2013 12:00:00 PM CST			
Need by Date				

Supplier Information

Company	TMCO Metal & Art Division
Address	544 J Street Lincoln, NE 68508
Contact	Emily Brodersen
Department	
Building	
Floor/Room	
Telephone	1 (402) 742-2258
Fax	1 (402) 742-2258
Email	ebrodersen@tmcoinc.com
Submitted	1/2/2013 11:27:05 AM CST
Total	$45,688.65

Signature _____

Supplier Notes

Bid Notes

Bid Activities

Bid Messages

Please review the following and respond where necessary

EXHIBIT A TO CONTRACT AGREEMENT

#	Name	Note	Response
1	Instructions to Bidders	I acknowledge reading and understanding the Instructions to Bidders.	Yes
2	Insurance Requirements	I acknowledge reading and understanding the Insurance Requirements.	Yes
3	Specifications	I acknowledge reading and understanding the specifications and attachments.	Yes
4	Tax Exempt Certificate Forms	Materials being purchased in this bid are tax exempt and unit prices are reflected as such. A Purchasing Agent Appointment form and a Exempt Sales Certificate form shall be issued with contract documents. (Note: State Tax Law does not provide for sales tax exemption for proprietary functions for government, thereby Water projects are taxable.)	Yes
5	Contact	Name of person submitting this bid:	Emily Brodersen
6	Electronic Signature	Please check here for your electronic signature.	Yes
7	Bid Response Information	I acknowledge reading and understanding the Bid Response Information.	Yes
8	Drawings	I acknowledge reading and understanding the Project Drawings.	Yes

Line Items

#	Qty	UOM	Description	Response
1	9	Each	Custom Copper Top Bar Height Tables 60" W x 32.5" D x 42" H	$1,224.28
	Item Notes:			
	Supplier Notes:			
2	27	each	Custom Copper Top Bar Height Tables 72" W x 32.5" D x 42" H	$1,245.19
	Item Notes:			
	Supplier Notes:			
3	1	Lump Sum	Freight/Delivery/Setup	$1,050.00
	Item Notes:			
	Supplier Notes:		Includes delivery and setup of 36 tables. For delivery and front-door dropoff only, price would be $270.00 TOTAL.	
			Response Total:	$45,688.65

EXHIBIT A TO CONTRACT AGREEMENT

TMCO, INC.
507 J STREET • LINCOLN, NE 68508-2935
PHONE: 402-742-2220 • FAX: 402-742-2234

COMPANY INFORMATION

TMCO has been providing specialty fabrication of custom parts since it opened its doors near Lincoln, Nebraska's Haymarket district in 1974.

TMCO started with 1 employee and currently has 185 full time and about 15 part time employees. 20% sales growth annually since 1974.

TMCO is an ISO-Certified company.

RECENT PROJECTS

1. 'Slate' Balconies for NuStyle Development Corp.
   Design and fabrication of 96 custom balconies for the Slate apartment building at 1815 Capitol Ave. in Omaha, NE.

   Contact:
   Todd Heistand
   Owner, NuStyle Development Corporation
   514 Walker Street
   Woodbine, IA 51579
   712-647-2041
   ToddH@nustyle.net

2. 'Parkhaus' rooftop furniture for Block 38 LLC
   Design and fabrication of 34-piece custom furniture set for the rooftop deck of the Parkhaus building at 250 N. 13th St. in Lincoln, NE.

   Contact:
   Joshua Berger
   Head of Development, Lincoln Office Manager
   728 Q St., Ste. C
   Lincoln, NE 68508
   402-434-9440
   JBerger@s2wpartners.com

3. 'Centennial Mall' site furnishings for Lincoln Parks Foundation
   Fabrication of bollards and benches (110 pieces total) for Centennial Mall in Lincoln, NE.

   Contact:
   J.J. Yost
   Planning & Construction Manager, Lincoln Parks and Recreation
   2100 M Street
   Lincoln, NE 68510
   402-441-8252

PROJECT: CUSTOM COPPER TABLES FOR PINNACLE BANK ARENA SUITES

LIST OF MATERIAL SUPPLIERS FOR COPPER SUITE TABLES

QTY 9 OF 60" LENGTH, QTY 27 OF 72" LENGTH

MATERIAL	VENDOR
CASTERS	MCMASTER-CARR, CHICAGO, ILLINOIS
HAMMERED COPPER SHEET	RIGIDIZED METALS CORPORATION, BUFFALO, NEW YORK
STEEL TUBE	STATE STEEL, OMAHA, NEBRASKA

UNLESS OTHERWISE SPECIFIED:
DIMENSIONS ARE IN INCHES
TOLERANCES:
FRACTIONAL ± 1/64
ANGLE: MACH ± 1° BEND ± 2°
.X ± .060 .XX ± .030 .XXX ± .010

TMCO METAL & ART DIVISION

REV	DRAWN BY	DATE	DESCRIPTION
IR	EMILY	1/2/13	
1			
2			
3			

X:\METNART\DLR\suite tables\suite table assy 72

EXHIBIT A TO CONTRACT AGREEMENT

PROJECT: 72" PBA SUITE TABLE

PART: **COPPER SUITE TABLE 72**

'CUSTOM COPPER TOP BAR HEIGHT TABLES FOR PINNACLE BANK ARENA'

QTY 27

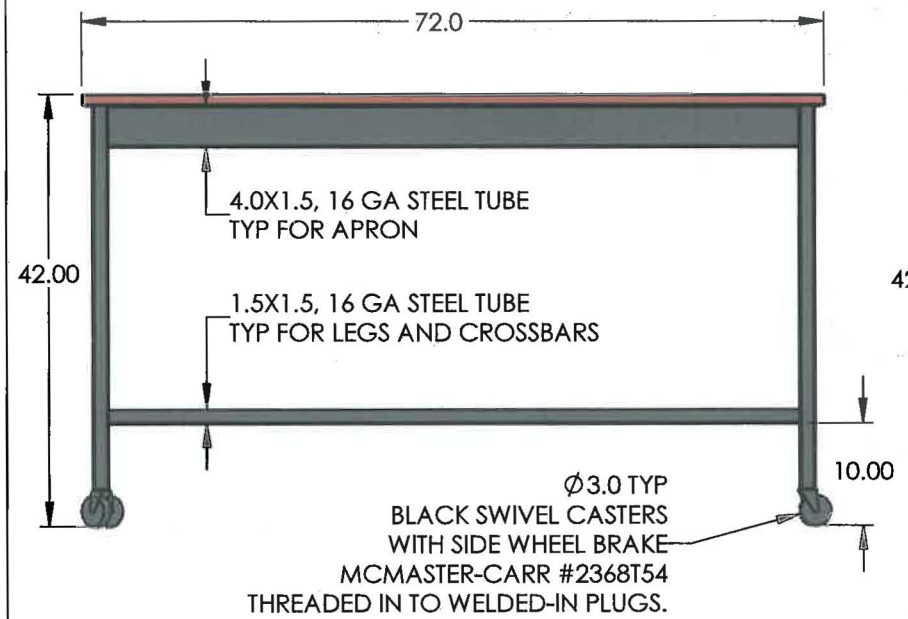

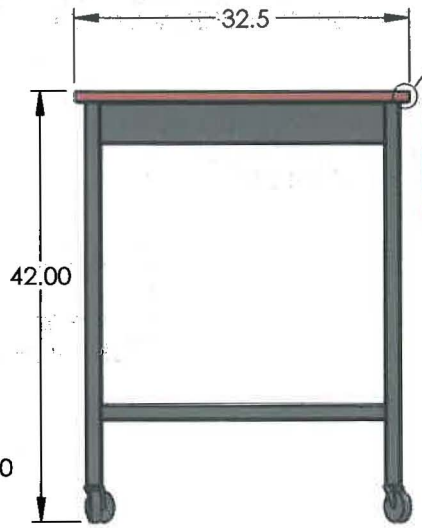

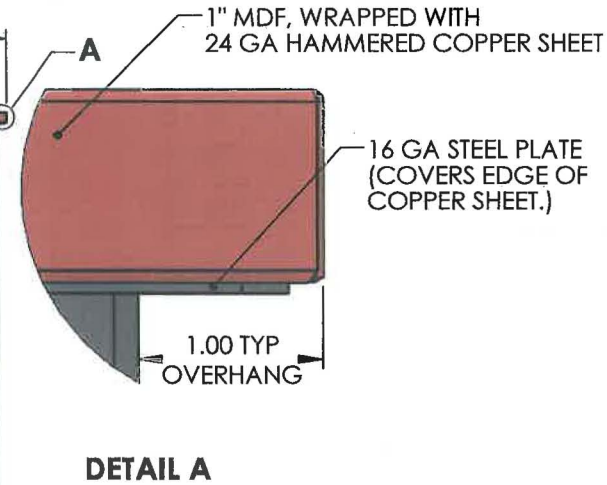

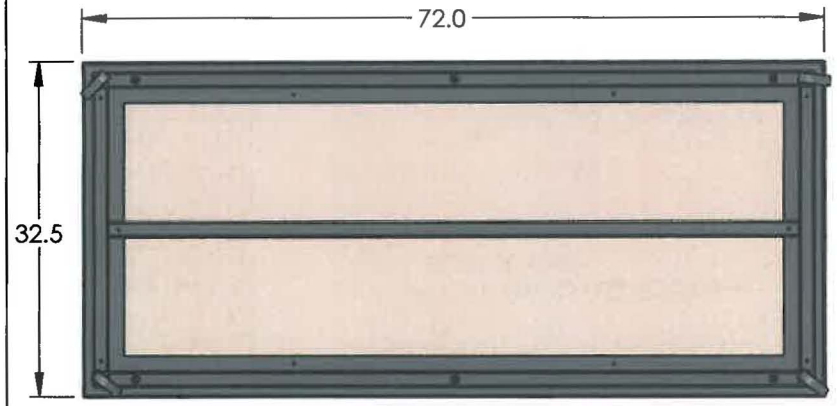

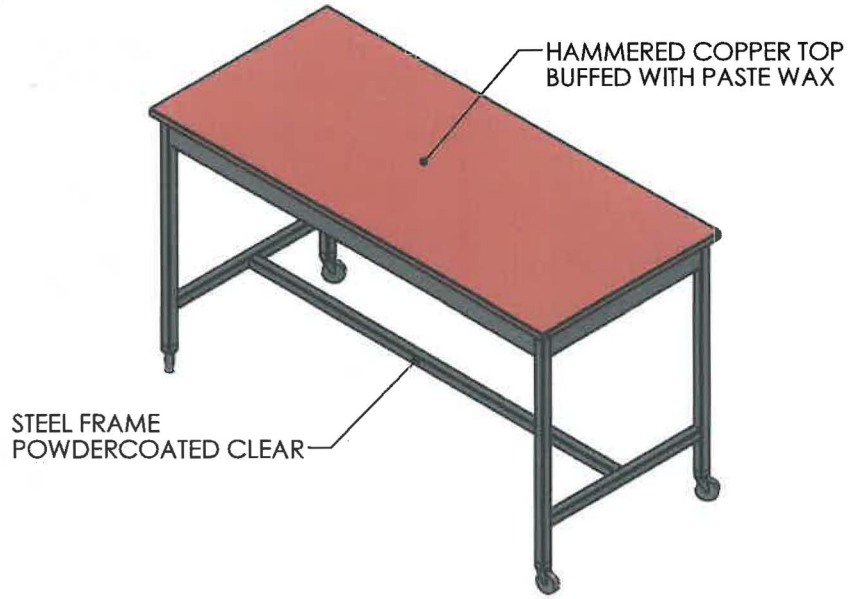

MANUFACTURED AND ASSEMBLED AT TMCO, INC.
AT 544 J STREET, LINCOLN, NE 68508 U.S.A.

UNLESS OTHERWISE SPECIFIED:
DIMENSIONS ARE IN INCHES
TOLERANCES:
FRACTIONAL ± 1/64
ANGLE: MACH ± 1° BEND ± 2°
.X ± .060 .XX ± .030 .XXX ± .010

TMCO
METAL & ART DIVISION

REV	DRAWN BY	DATE	DESCRIPTION
IR	EMILY	9/19/12	
1			
2			
3			

X:\METNART\DLR\suite tables\suite table assy 72

EXHIBIT A TO CONTRACT AGREEMENT

PROJECT: 60" PBA SUITE TABLE

PART: **COPPER SUITE TABLE 60**

'CUSTOM COPPER TOP BAR HEIGHT TABLES FOR PINNACLE BANK ARENA'

QTY 9

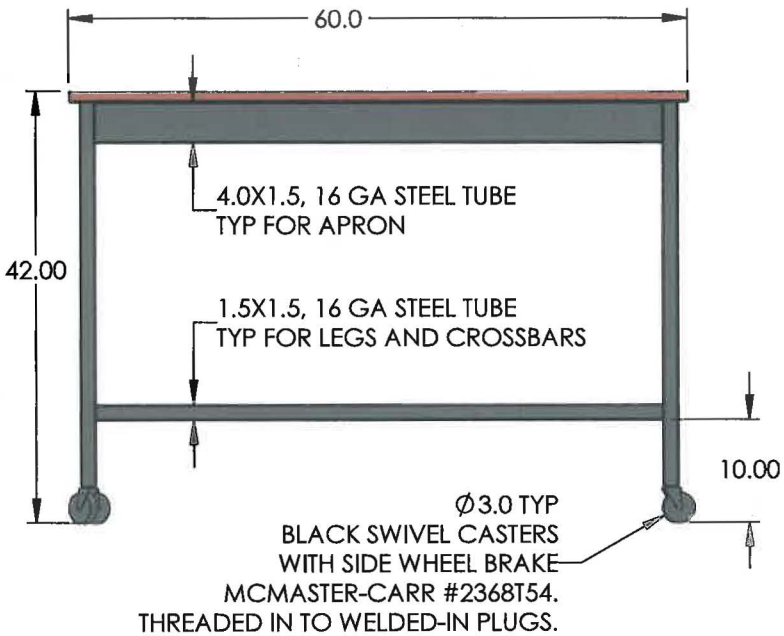

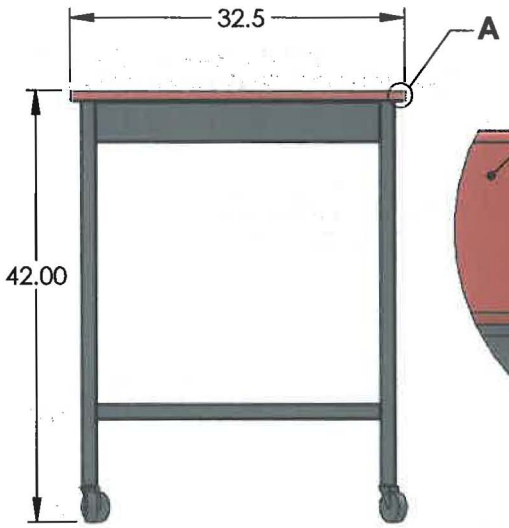

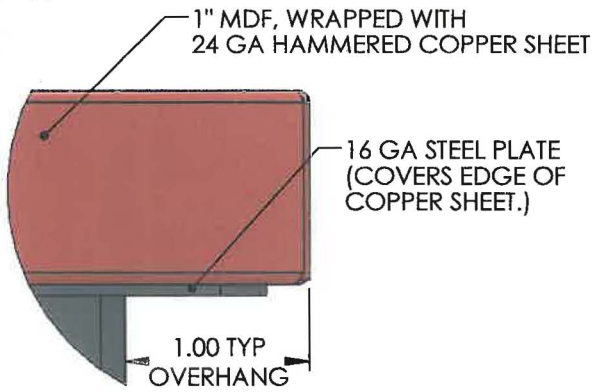

DETAIL A

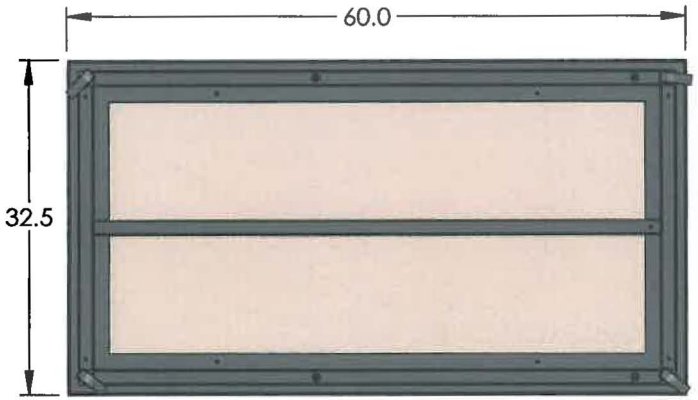

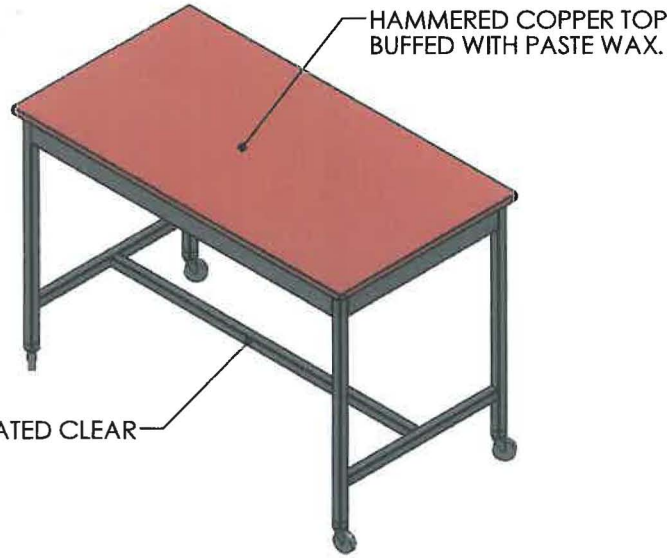

MANUFACTURED AND ASSEMBLED AT TMCO, INC.
AT 544 J STREET, LINCOLN, NE 68508 U.S.A.

UNLESS OTHERWISE SPECIFIED:
DIMENSIONS ARE IN INCHES
TOLERANCES:
FRACTIONAL ± 1/64
ANGLE: MACH ± 1° BEND ± 2°
.X± .060 .XX± .030 .XXX± .010

TMCO
METAL & ART DIVISION

REV	DRAWN BY	DATE	DESCRIPTION
IR	EMILY	9/19/12	
1			
2			
3			

X:\METNART\DLR\suite tables\suite table assy 60

EXHIBIT A TO CONTRACT AGREEMENT

EXHIBIT B

Indemnification and Insurance Requirements for all West Haymarket Joint Public Agency Contracts (approved March 2012)

Approved by Law
1-15-2013

INDEMNIFICATION AND INSURANCE REQUIREMENTS
FOR ALL WEST HAYMARKET JOINT
PUBLIC AGENCY CONTRACTS

1. INDEMNIFICATION

A. **Indemnification of JPA**

TO THE FULLEST EXTENT PERMITTED BY LAW, CONTRACTOR SHALL RELEASE, INDEMNIFY, DEFEND AND HOLD HARMLESS JPA AND JPA'S MEMBERS, SUCCESSORS, ASSIGNS, LEGAL REPRESENTATIVES, OFFICERS, EMPLOYEES AND AGENTS FOR, FROM AND AGAINST ANY AND ALL CLAIMS, LIABILITIES, FINES, PENALTIES, COSTS, DAMAGES, LOSSES, LIENS, CAUSES OF ACTION, SUITS, DEMANDS, JUDGMENTS AND EXPENSES (INCLUDING, WITHOUT LIMITATION, COURT COSTS AND ATTORNEYS' FEES) OF ANY NATURE, KIND OR DESCRIPTION OF ANY PERSON (INCLUDING, WITHOUT LIMITATION, THE EMPLOYEES OF THE PARTIES HERETO) (COLLECTIVELY, "LIABILITIES") ARISING OUT OF, RESULTING FROM OR CAUSALLY RELATED TO (IN WHOLE OR IN PART), PERFORMANCE OF THE CONTRACT THAT RESULTS IN BODILY INJURY, SICKNESS, DISEASE, OR DEATH CAUSED IN WHOLE OR IN PART BY ANY ACT OR OMMISSION OF THE CONTRACTOR, ANY SUBCONTRACTOR, ANYONE DIRECTLY OR INDIRECTLY EMPLOYED BY ANY OF THEM, OR ANYONE FOR WHOSE ACTS ANY OF THEM MAY BE LIABLE WHETHER OR NOT IT IS CAUSED IN WHOLE OR PART BY A PARTY INDEMNIFIED HEREUNDER.

Such indemnification shall not be construed to negate, abridge, limit or otherwise reduce any other right or obligation of indemnity which would otherwise exist as to any party or person described in this section.

B. In any and all claims by any employee (whether an employee of the Contractor or subcontractor, or their respective agents or assigns or by anyone directly or indirectly employed by any of them or anyone for whose acts any of them may be liable as an employer) in whole or in part against JPA, its officers, agents, employees, volunteers or consultants, the above indemnification shall not be limited in any way by the amount of damages, compensation, benefits or other contributions payable by or on behalf of a the employer under Worker's Compensation statutes, disability benefit acts, or any other employee benefit or payment acts as the case may be.

C. The obligations of indemnification herein shall not include or extend to:

(1) Any outside engineer's or architect's professional errors and omissions involving the approval or furnishing of maps, drawings, opinions, reports, surveys, change orders, designs or specifications within the scope of professional services provided to JPA and related to the Contract; and

(2) Any claims wholly caused by the JPA's sole negligence and excluding claims to the extent such claims are caused by the willful misconduct or gross negligence of the JPA.

D. In the event of any litigation of any such claims shall be commenced against JPA, Contractor shall defend the same at Contractor's sole expense upon notice thereof from JPA. Contractor shall notify the insuring company that JPA reserves and does not waive any statutory or governmental immunity and neither Contractor, nor Contractor's counsel whether employed by Contractor or by an insurer on behalf of the Contractor shall waive such defenses or enter into any settlement or other disposition requiring waiver of any defenses or immunity of JPA without the express written consent of the JPA.

2. INSURANCE GENERAL PROVISIONS

A. **Approved Coverage Prior to Commencing Work/Subcontractors Included.** Contractor shall purchase and maintain in place insurance to protect Contractor and JPA, its officers, agents, employees, volunteers and consultants from and against all liabilities and hazards as provided in these insurance requirements throughout the duration of the Contract. Contractor shall not commence work under this contract until the Contractor has obtained all insurance required under Section 2. below and such insurance has been approved by the City Attorney for JPA, nor shall the Contractor allow any subcontractor to commence work on any subcontract until all similar insurance required of the subcontractor has been so obtained and approved.

B. **Occurrence Basis Coverage.** All insurance shall be provided on an occurrence basis and not on a claims made basis, except for hazardous materials, errors and omissions, or other coverage not reasonably available on an occurrence basis; provided that all such claims made coverage is subject to the prior written approval of the City Attorney and must be clearly indicated as such in any certificate showing coverage.

C. **Authorized and Rated Insurers Required.** All insurance coverage are to be placed with insurers authorized to do business in the State of Nebraska and must be placed with an insurer that has an A.M. Best's Rating of no less than A:VII unless specific approval has been granted by the City Attorney.

D. **Certificates Showing Coverage**. Prior to commencing the Work, Contractor must furnish to JPA adequate written documentation including certificate(s) of insurance, which have the original signature of the authorized representative, declaration pages or other acceptable policy information evidencing the required coverage, endorsements, and amendments. The policy(ies) must contain a provision that obligates the insurance company(ies) issuing such policy(ies) to notify JPA in writing at least 30 days prior to any cancellation, except that only ten (10) days prior notice is required for cancellation due to nonpayment of premium. Upon request from JPA, a certified duplicate original of any required policy must be furnished. Certificate(s) should be sent to the following address:

West Haymarket Joint Public Agency
c/o City Attorney
City of Lincoln, Nebraska
555 South 10th Street
Lincoln, NE 68508

Certificates of insurance may utilize an appropriate standard ACORD Certificate of Insurance form showing the specific limits of insurance coverage required by this Article; provided that restrictions, qualifications or declarations inconsistent with the requirements of this Article shall not relieve the Contractor from providing insurance as required herein. Such certificates shall show JPA as additional insured except for applicable Worker's Compensation coverage, to include all work performed for JPA and specifically including, but not limited to, any liability caused or contributed to by the act, error, or omission of the Contractor, including any related subcontractors, third parties, agents, employees, officers or assigns of any of them. The inclusion of JPA as additional insured shall be for coverage only on a primary basis for liability coverage, and no coverage shall contain a policy or other restriction or attempt to provide restricted coverage for JPA, whether on an excess, contributory or other basis regardless of any other insurance coverage available to JPA, including by specific endorsement where necessary, as indicated in the following requirements.

E. **Terminology.** The terms "insurance," "insurance policy," or "coverage" as used in this article are used interchangeably and shall have the same meaning as "insurance" unless the context clearly requires otherwise. References to "ISO®" forms are merely for convenience and ease of reference, and an equivalent or better form as determined acceptable by the City Attorney may be used. (Note: ISO® is a registered trademark of ISO Properties, Inc.)

F. **Other Requirements**. Contractor agrees to waive its right of recovery against JPA for all claims and suits against JPA, except for claims and suits arising wholly out of the sole negligence, or to the extent caused by the gross negligence or willful misconduct, of JPA. In addition, its insurers, through the terms of the policy or policy endorsement, waive their right of subrogation against JPA for all claims and suits, except for claims and suits arising wholly out of the sole negligence, or to the extent caused by the gross negligence of willful misconduct, of JPA. The certificate of insurance must reflect the waiver of subrogation endorsement. Contractor further waives its right of recovery, and its insurers also waive their right of subrogation against JPA for loss of its owned or leased property or property under Contractor's care, custody or control, except for the right of recovery or right of subrogation arising wholly out of the sole negligence, or to the extent caused by the gross negligence or willful misconduct, of JPA.

Contractor is not allowed to self-insure without the prior written consent of JPA. If granted by JPA, any deductible, self-insured retention or other financial responsibility for claims must be covered directly by Contractor in lieu of insurance. Any and all JPA liabilities that would otherwise, in accordance with the provisions of this Agreement, be covered by Contractor's insurance will be covered as if Contractor elected not to include a deductible, self-insured retention or other financial responsibility for claims.

Upon notification to JPA of cancellation, non-removal, substitution or material alteration of any such policy(ies), JPA shall have the option to (i) if feasible, pay, on behalf of the Contractor, any and all such premiums, penalties, fees for expenses necessary to keep such policy(ies) in full force and effect; or (ii) in the event that such policy(ies) cannot be kept in full force and effect, enter into the open market to procure such policy(ies) of insurance on behalf of Contractor as required by this Agreement at the then current market rate. Upon any of the above occurrences, JPA shall invoice the Contractor for reimbursement of such premiums, penalties, fees, or expenses advanced on the JPA's behalf plus an additional fifteen percent (15%) of such advanced amounts as remuneration for JPA's overhead. Such amounts advanced by JPA shall be paid by the Contractor within thirty (30) days after delivery of a statement for such expense.

Contractor represents that this Agreement has been thoroughly reviewed by Contractor's insurance agent(s)/broker(s), who have been instructed by Contractor to procure the insurance coverage required by this Agreement. Allocated Loss Expense must be in addition to all policy limits for coverages referenced above.

If any portion of the operation is to be subcontracted by Contractor, Contractor must require that its subcontractors provide and maintain the insurance coverages set forth herein, naming JPA as an additional insured, and requiring that the subcontractors release, defend and indemnify JPA to the same extent and under the same terms and conditions as Contractor is required to release, defend and indemnify JPA herein.

Failure to provide evidence as required by Section 2. will entitle, but not require, JPA to immediately suspend work under this Agreement until such evidence is provided. Acceptance of a certificate that does not comply with this section will not operate as a waiver of Contractor's obligations hereunder. The fact that insurance (including, without limitation, self-insurance) is obtained by Contractor will not be deemed to release or diminish the liability of Contractor including, without limitation, liability under the indemnity provisions of this Agreement. Damages recoverable by JPA will not be limited by the amount of the required insurance coverage.

3. INSURANCE REQUIREMENTS

A. **Scope of Required Coverage.** The Contractor shall take out and maintain during the life of the Contract such insurance in the forms and minimum amounts as specified in this Section and as will protect Contractor and JPA from the following claims arising out of or resulting from or in connection with the Contractor's operations, undertakings or omissions directly or indirectly related to the Contract, whether by the Contractor or any Subcontractor or anyone directly or indirectly employed by any of them, or by anyone for whose acts any of them may be liable:

(1) Claims under workers' compensation, disability benefit, or other employee benefit acts;

(2) Claims arising out of bodily injury, occupational sickness or disease, or death of an employee or any other person;

(3) Claims customarily covered under personal injury liability coverage;

(4) Claims other than to the work itself arising out of an injury to or destruction of tangible property, including the loss of use resulting therefrom;

(5) Claims arising out of ownership, maintenance or use of any motor vehicle;

(6) Railroad protective liability coverage in the event the contract involves work to be performed within 50 feet of any railroad property and affecting any railroad bridge or trestle, tracks, road beds, tunnel, underpass or crossing.

B. **Worker's Compensation Insurance and Employer's Liability Insurance.** The Contractor shall provide applicable statutory Worker's Compensation Insurance with minimum limits as provided below covering all Contractor's employees, and in the case of any subcontracted work, the Contractor shall require the subcontractor similarly to provide Worker's Compensation Insurance for Subcontractor's employees. This policy shall contain the following endorsement or language: "Waiver of subrogation in favor of JPA."

The Contractor shall provide Employer's Liability Insurance with minimum limits as provided below placed with an insurance company authorized to write such insurance in all states where the Contractor will have employees located in the performance of this contract, and the Contractor shall require each Subcontractor similarly to maintain Employer's Liability Insurance on the Subcontractor's employees.

Coverage	**Listing**	**Min Amt**	**Notes**
Worker's Comp.			
	State	Statutory	
	Applicable Federal	Statutory	
Employer's Liability			
	Bodily Injury by accident	$500,000	each accident
	Bodily Injury by disease	$500,000	each employee
	Bodily Injury	$500,000	policy limit

C. **Commercial General Liability Insurance.**

(1) The Contractor shall provide Commercial General Liability Insurance in a policy form providing broad form contractual liability no less comprehensive and no more restrictive coverage than provided under the ISO® form CG00010798 or newer with standard exclusions "a" through "o" and with minimum limits as provided below.

Coverage	Min Amt	Notes
General	$5,000,000/$10,000,000	Each Occurrence/Aggregate
Products and Completed Operations	$5,000,000/$10,000,000	Each Occurrence/Aggregate
Personal and Advertising Injury	$5,000,000/$10,000,000	Each Occurrence/Aggregate
Fire Damage Limit	$ 100,000	any one fire
Medical Damage Limit	$ 10,000	any one person

(2) The required Commercial General Liability Insurance shall also include coverage for the following:

- Bodily injury and property damage.
- Fire legal liability
- Coverage for all premises and operations.
- Personal and advertising injury.
- Operations by independent contractors.
- X.C.U. Coverage including coverage for demolition of any building or structure, collapse, explosion, blasting, excavation and damage to property below the surface of ground.
- Any fellow employee exclusions shall be deleted.
- Coverage shall not contain an absolute pollution exclusion, and applicable remaining coverage shall apply for pollution exposures arising from products and completed operations.
- Coverage for products and completed operations maintained for duration of work and shall be maintained for a minimum of three years after final acceptance under the Contract or the warranty period for the same whichever is longer, unless modified in any Special Provisions.
- Liability coverage which shall include contractually assumed defense costs in addition to any policy limits.
- Contractual liability coverage.

(3) This policy shall also include the following endorsements which shall be indicated on the Certificate of Insurance.

- The definition of insured contract shall be amended to remove any exclusion or other limitation for work being done within 50 feet of railroad property.
- Endorsement to provide the general aggregate per project endorsement.
- Endorsement to provide waiver of subrogation in favor of and acceptable to JPA.
- Endorsement to provide that the policy shall be primary and non-contributory with respect to any insurance carried by the JPA.
- Separation of insureds.
- Additional insured endorsement in favor of and acceptable to the JPA.

(4) If work is to be performed within 50 feet of any railroad property and affecting any railroad bridge or trestle, tracks, road beds, tunnel, underpass or crossing, Railroad Contractual Liability Endorsement (ISO® form CG24170196 or newer). The definition of insured contract shall be amended to remove any exclusion or other limitation for any work done within fifty (50) feet of railroad property.

D. **Vehicle liability insurance coverage.**

The Contractor shall provide reasonable insurance coverage for all owned, non-owned, hired and leased vehicles. This insurance shall contain a combined single limit of at least $1,000,000 per occurrence, and include coverage for, but not limited to the following:

- Bodily injury and property damage
- Any and all vehicles owned, used or hired

This policy shall also contain the following endorsements or language, which shall be indicated on the certificate of insurance:

- Waiver of subrogation in favor of and acceptable to JPA.
- Additional insured endorsement in favor or and acceptable to JPA.
- Separation of insureds.
- The policy shall be primary and non-contributing with respect to any insurance carried by JPA.
- Endorsements to include contractual liability coverage and delete any fellow employee exclusion.
- If specifically required in the Special Provisions, the required coverage shall also include an endorsement for auto cargo pollution (ISO® form CA 99 48).

E. **Umbrella/Excess Insurance.** At the Contractor's option, the Commercial General Liability Insurance coverage limits specified in Section 3.C. above may be satisfied with a combination of primary and Umbrella/Excess Insurance.

F. **Railroad Protective Liability.** If work is to be performed within 50 feet of any railroad property and affecting any railroad bridge or trestle, tracks, road beds, tunnel, underpass or crossing or otherwise required by the Special Provisions or applicable requirements of an affected railroad, the Contractor shall provide Railroad Protective Liability Insurance naming the affected railroad/s as insured with minimum limits for bodily injury and property damage of $5,000,000 per occurrence, $10,000,000 aggregate, or such other limits as required in the Special Provisions or by the affected railroad. The original of the policy shall be furnished to the railroad and a certified copy of the same furnished to the City Attorney's office prior to any related construction or entry upon railroad premises by the Contractor or for work related to the Contract.

The policy shall be issued on a standard ISO form CG 00 35 10 93 and include the following endorsements:

- Endorsed to include the Pollution Exclusion Amendment (ISO form CG 28 31 10 93)
- Endorsed to include the Limited Seepage and Pollution Endorsement.

No other endorsements restricting coverage may be added. The original policy must be provided to Railroad prior to performing any work or services under this C&M Agreement.

In lieu of providing a Railroad Protective Liability Policy, Contractor may participate in ANY RAILROAD'S Blanket Railroad Protective Liability Insurance Policy available to JPA and JPA Contractors.

G. **Special Provision.** At the JPA's option, the minimum insurance requirements specified above may be increased or decreased by special provision in a JPA contract.

4. CONTRACTOR'S INSURANCE FOR OTHER LOSSES.

A. Contractor shall assume full responsibility for all loss or damage from any cause whatsoever to any tools owned, rented or used in connection with the Contract including any tools, machinery, equipment, storage devices, containers, sheds, temporary structures, staging structures, scaffolding, fences, forms, braces, jigs, screens, brackets, vehicles and the like owned or rented by Contractor, or Contractor's agents, subcontractors, suppliers, or employees.

B. In connection with the above, Contractor shall cause or require any applicable insurance related to physical damage of the same to provide a waiver of a right of subrogation against JPA.

5. NOTIFICATION IN EVENT OF LIABILITY OR DAMAGE.

A. The Contractor shall promptly notify JPA in writing and provide a copy of all claims and information presented to any of Contractor's insurance carrier/s upon any loss or claim or upon any occurrence giving rise to any liability or potential liability related to the Contract or related work. The notice to JPA shall include pertinent details of the claim or liability and an estimate of damages, names of witnesses, and other pertinent information including the amount of the claim, if any.

B. In the event JPA receives a claim or otherwise has actual knowledge of any loss or claim arising out of the Contract or related work and not otherwise known to or made against the Contractor, JPA shall promptly notify the Contractor of the same in writing, including pertinent details of the claim or liability; Provided, however JPA shall have no duty to inspect the project to obtain such knowledge, and provided further that JPA's obligations, if any, shall not relieve the Contractor of any liability or obligation hereunder.

6. PROPERTY INSURANCE/ BUILDER'S RISK.

A. The Contractor shall provide property insurance (a/k/a Builder's Risk or installation Floater) on all Projects involving construction or installation of buildings or structures and other projects where provided in the Special Provisions. Such insurance shall be provided in the minimum amount of the total contract sum and in addition applicable modifications thereto for the entire work on a replacement cost basis. Such insurance shall be maintained until JPA completes final acceptance of the work as provided in the Contract. Such insurance shall be written and endorsed, where applicable, to include the interests of JPA, Contractor, Subcontractors, Sub-subcontractors in the related work. The maximum deductible for such insurance shall be $5,000 for each occurrence, which deductible shall be the responsibility of the Contractor. Such insurance shall contain a "permission to occupy" endorsement.

B. All related Property Insurance shall be provided on a "Special Perils" or similar policy form and shall at a minimum insure against perils of fire including extended coverage and physical loss or damage including without limitation or duplication of coverage: flood, earthquake, theft, vandalism, malicious mischief, collapse, and debris removal, including demolition whether occasioned by the loss or by enforcement of applicable legal or safety requirements including compensation or costs for JPA's related costs and expenses (as owner) including labor required as a result of such loss.

C. All related Property Insurance shall include coverage for falsework, temporary buildings, work stored off-site or in-transit to the site, whether in whole or in part. Coverage for work off-site or in-transit shall be a minimum of 10% of the amount of the policy.

D. The Contractor's Property Insurance shall be primary coverage for any insured loss related to or arising out of the Contract and shall not be reduced by or coordinated with separate property insurance maintained by JPA.

EXHIBIT C

Supply Bond

Approved by Law
1-15-2013

Bond No. _____

SUPPLY BOND

KNOW ALL MEN BY THESE PRESENTS:

That we, **TMCO, INC., Metal & Art Division**, as **Principal**, and _____ _____, a corporation organized under the laws of the State of _____ and authorized to transact business in the State of Nebraska, as **Surety**, are held and firmly bound unto the **West Haymarket Joint Public Agency,** as **Obligee**, in the penal sum of Forty-Five Thousand Six Hundred Eighty-Eight and 65/100ths Dollars ($45,688.65), lawful money of the United States of America and to the faithful payment of which, well and truly to be made, we bind ourselves, our heirs, executors, and administrators (or, assigns), firmly by this presents.

THE CONDITION OF THE ABOVE OBLIGATION IS SUCH, That:

WHEREAS, Principal has entered into the West Haymarket Joint Public Agency (JPA) Custom Copper Top Bar Height Tables Contract ("Contract") dated _____, 2013, (an original of which is on file in the Office of the City Clerk of the City of Lincoln, Nebraska) which provided for the procurement, delivery and setup of the custom copper top bar height tables as set forth in the Notice to Bidders Specifications.

NOW, THEREFORE, if Principal shall timely procure, deliver and set up the custom copper top bar height tables in accordance with the Contract, as require the execution of this Supply Bond, then this obligation shall become void, otherwise to remain in full force and effect. In the event Principal shall be declared by the Obligee to be in default under the above obligation, the Obligee may relet or otherwise complete the purchase, delivery and set up of the custom copper top bar height tables. Surety shall promptly indemnify and save harmless the Obligee to the limit of the penal amount of this bond from any loss, including but not limited to the Obligee's reasonable cost of such reletting or completion including the increased cost, if any, for the purchase, delivery and setup of the custom copper top bar height tables and delay damages due to the Principal's failure to timely procure, deliver and set up the custom copper top bar height tables.

Signed and dated this ____ day of _____, 2013.

TMCO, INC., Metal & Art Division, Principal

By: _____
Name: _____
Title: _____

_____, Surety

By: _____
Title: Attorney-in-Fact

(Accompany this Bond with Attorney-in-Fact's authority from Surety to execute this bond, certified to include the date of the Bond)

WH 13-10 Introduce: 1-24-13

RESOLUTION NO. WH- _____

BE IT RESOLVED by the Board of Representatives of the West Haymarket Joint Public Agency:

That the Contract Agreement between the West Haymarket Joint Public Agency and Olsson Associates, pursuant to Bid No. 13-011, to perform Special Inspections for Pedestrian Bridge for the sum of $67,946.00 is hereby approved and the Chairperson of the West Haymarket Joint Public Agency Board of Representatives is hereby authorized to execute said Contract Agreement on behalf of the West Haymarket Joint Public Agency.

The City Clerk is directed to return a fully executed original Contract Agreement and a copy of this Resolution to Rick Peo, Chief Assistant City Attorney, for transmittal to Olsson Associates.

Adopted this _____ day of January, 2013.

Introduced by:

_____

Approved as to Form & Legality:

_____
Legal Counsel for
West Haymarket Joint Public Agency

West Haymarket Joint Public Agency
Board of Representatives

_____
Chris Beutler, Chair

_____
Tim Clare

_____
Eugene Carroll

WEST HAYMARKET JOINT PUBLIC AGENCY (JPA)
BID NO. 13-011

C O N T R A C T A G R E E M E N T

THIS JPA CONTRACT AGREEMENT ("Contract") is made and entered into as of the _____ day of _____, 2013, by and between **OLSSON ASSOCIATES,** hereinafter called Contractor, and the **WEST HAYMARKET JOINT PUBLIC AGENCY**, hereinafter called JPA.

RECITALS

WHEREAS, JPA has caused to be prepared, in accordance with law, Specifications, Plans, and other Contract Documents for the Work herein described, and has approved and adopted said documents and has caused to be published a Notice to Bidders advertisement for and in connection with said Work, to wit:

West Haymarket Pedestrian Bridge – Special Inspections
Bid No. 13-011

WHEREAS, the Contractor, in response to such advertisement, has submitted to the JPA, in the manner and at the time specified, a sealed Proposal in accordance with the terms of said advertisement.

WHEREAS, JPA, in the manner prescribed by law, has publicly advertised, opened, examined, and canvassed the Proposals submitted in response to such advertisement, and as a result of such canvass has determined and declared the Contractor to be the lowest and best bidder for the said Work for the sum of Sixty-Seven Thousand Nine Hundred Forty-Six and 00/100th Dollars ($67,946.00). Copies of the Bid Opportunity Detail, Notice to Bidders, Addendum Nos. 1-4; Scope of Services; Special Provisions – Bridge Provisions Only; and the Contractor's Proposal (collectively "Bid Documents") are attached hereto as Exhibit A.

WHEREAS, since the Work will be carried out within 50 feet of BNSF Property pursuant to a Temporary License/Right-of-Entry ("ROE"), the terms and conditions of the ROE and the Construction and Maintenance Agreement ("C&M Agreement") between BNSF and the City of Lincoln as assigned to the JPA ("C&M Agreement") are applicable to the performance of the Work and Contractor must comply with the applicable provisions of the C&M Agreement concerning work within 50 feet of BNSF Property including, but not limited to the BNSF Insurance Requirements. The C&M Agreement is attached hereto as Exhibit C.

WHEREAS, the use of the term "City of Lincoln" in the C&M Agreement shall be deemed to refer to the JPA.

WHEREAS, Contractor possesses certain skills, experience, education and competency to perform the Work on behalf of the JPA and the JPA desires to engage Contractor for such services on the terms and conditions provided herein.

WHEREAS, Contractor is willing and able to perform the Work in accordance with this Contract.

NOW, THEREFORE, in consideration of the mutual covenants and agreements of the Parties contained herein and incorporating all of the above Recitals into this Contract as if fully set forth herein, the Contractor and JPA have agreed and hereby agree as follows:

PERFORMANCE OF WORK - The Contractor agrees to (a) furnish all tools, equipment, supplies, superintendence, transportation, and other construction accessories, services, and facilities; (b) furnish all materials, supplies, and equipment specified to be incorporated into and form a permanent part of the complete Work; (c) provide and perform all necessary labor in a substantial and workmanlike manner and in accordance with the provisions of the Contract Documents; and (d) execute, construct, and complete all Work included in and covered by JPA's official award of this Contract to the Contractor, such award being based on the acceptance by JPA of the Contractor's Bid as set forth in Exhibit A.

CHANGE IN SCOPE OF SERVICES. If an additive or subtractive change in scope is encountered on the site or requested by the JPA, a detailed Proposed Change Order request is to be provided by the Contractor. This must include a breakout of the estimated labor, materials, tools, and equipment required to complete the actual work. The maximum markup for all other items not associated with the work shall be ten percent (10%). This is to include all onsite and offsite overhead, all general conditions, profit, and any other costs not associated with the actual performance of the work.

BNSF CONTRACT REQUIREMENTS. Contractor agrees that the provisions in the C&M Agreement are made part of this Contract. Contractor agrees that if the Work will be performed within 50 feet of BNSF Property, Contractor will comply with the Contractor Requirements attached as Exhibit C to the C&M Agreement). Contractor understands and agrees that prior to commencing the Work, the Contractor must:

(a) Obtain all required insurance, evidenced by certificates of insurance as required by the JPA, City Legal, BNSF, and any other required insurance.

(b) Submit all required insurance certificates to BNSF@certfocus.com and to PC Sports.

(c) Submit copies of required insurance certificates to Michael Schaefer (BNSF):

Michael Schaefer
Michael.Schaefer2@BNSF.com
402-458-7379 (office)
402-304-1437 (cell)
402-458-7457 (fax)

Contractor further agrees that should it be necessary to enter upon the BNSF Property to perform the Work, Contractor must prior to such entry:

(a) Complete the BNSF Contractor Safety Orientation at www.contractororientation.com. All personnel who will be on site must take the safety training program and keep the issued ID card on their person at all times while on site. This includes employees of subcontractors employed by the Contractor.

(b) Complete the e-RAILSAFE security orientation training program at www.erailsafe.com. All personnel who will be on site must take the security training program and keep the issued ID card on their person at all times while on site. This includes employees of subcontractors employed by the Contractor.

(c) Send confirmation of the completion of the Contractor's Safety Orientation and e-RAILSAFE security orientation programs to the City Representative (PC Sports) and to Michael Schaefer, along with a list of all personnel who have taken both programs. This includes employees of subcontractors employed by the Contractor.

(d) Assume and comply with the terms and conditions of any right-of-entry agreement, license and/or easement between BNSF and the JPA governing access to such BNSF Property.

COMPENSATION - JPA agrees to pay to the Contractor for the performance of the Work embraced in this Contract, and the Contractor agrees to accept as full compensation therefore, the sums and prices for all Work covered by and included in the Contractor's Bid awarded by the JPA to the Contractor award, payment thereof to be made in the manner provided in Article VIII of the City of Lincoln Standard Specifications for Municipal Construction (2011 Edition).

COMPLETION DATE - The Contractor agrees that the Work in this Contract shall begin as soon after the Notice to Proceed as is necessary for the Contractor to complete the Work within the number of calendar days allowed and prior to the stated completion date.

INDEMNIFICATION - The following Indemnification provisions are in addition to and not in lieu of the Assumption of Liability and Indemnification provision in Article VI.B. of the City of Lincoln Standard Specifications for Municipal Construction (2011 Edition).

A. INDEMNIFICATION OF JPA. Contractor agrees to defend, indemnify and hold harmless JPA to the same extent and under the same terms and conditions as required by the Indemnification of JPA in the Indemnification and Insurance Requirements for All West Haymarket Joint Public Agency Contracts included as part of the Other Attached Contract Documents attached hereto as Exhibit D.

B. INDEMNIFICATION OF BNSF. Contractor understands and acknowledges that the JPA under the C&M Agreement is required to require the Contractor to release, defend and indemnify BNSF to the same extent and under the same terms and conditions as the JPA is required to release, defend and indemnify BNSF. Therefore, Contractor agrees to defend, release, indemnify and hold harmless BNSF to the same extent and under the same terms and conditions as the JPA is required to release, defend and indemnify BNSF in the C&M Agreement and as required in the Contractor's Right of Entry.

INSURANCE – The following insurance requirements are in lieu of the Insurance Requirements for all City Contracts found in Article X.B. of the City of Lincoln Standard Specifications for Municipal Construction (2011 Edition).

A. JPA Insurance Requirements. Contractor shall at all times during the term of this Agreement purchase and maintain in place insurance coverage as required by the Insurance Requirements for All West Haymarket Joint Public Agency Contracts included as part of the Other Attached Contract Documents attached hereto as Exhibit D.

B. BNSF Insurance Requirements. Contractor shall at all times during the term of this Contract purchase and maintain in place insurance coverage as required by the Insurance requirements of BNSF found in the C&M Agreement (Exhibit C).

Contractor agrees to provide all types of insurance required by either the JPA or BNSF. Contractor will furnish coverages against any and all perils required by either the JPA or BNSF. In the event there is a difference between the JPA and BNSF coverage limits, Contractor will provide the larger amount satisfying both JPA and BNSF requirements.

NEB. REV. STAT. § 77-1323 CERTIFIED STATEMENT – Contractor, pursuant to the requirements of Neb. Rev. Stat. § 77-1323, has executed the Certified Statement attached hereto as part of Exhibit D certifying that all equipment to be used in performance of the Work, except that acquired since the assessment date has been assessed for the current year. Contractor understands and acknowledges that under Neb. Rev. Stat. §77-1324, any person, partnership, limited liability company, association, or corporation falsifying any statement required by Neb. Rev. Stat. § 77-1323 shall be guilty of a Class IV misdemeanor.

CONTRACT DOCUMENTS - The Contract Documents comprise the Contract, and consist of the following, whether or not attached hereto:

1. Bid Documents (Exhibit A).
2. Exhibit B – Intentionally Omitted.

3. Construction and Maintenance Agreement (Exhibit C).
4. Other Attached Contract Documents (Exhibit D).
   a. Commentary to Accompany Construction Bonds.
   b. Construction Performance Bond.
   c. Construction Payment Bond.
   d. Indemnification and Insurance Requirements for all West Haymarket Joint Public Agency Contracts (approved March 2012).
   e. Executive Order No 83319.
   f. Certified Statement Pursuant to Neb. Rev. Stat. § 77-1323
5. Other Non-Attached Contract Documents.
   a. City of Lincoln Standard Specifications for Municipal Construction (2011 Edition). References to City in the Standard Specifications shall mean JPA, references to City Project Manager shall mean PC Sports. Notwithstanding any provisions to the contrary in the Standard Specifications, Change Orders shall be approved in accordance with the JPA's Change Order Process adopted by JPA Resolution No. WH00195.
   b. Lincoln Standard Plans 2010.
   c. ROE.
   d. Plans and Drawings.
   e. Contractor Qualification Form.
   f. Contractors Project Manager Qualification Form.
   g. Any executed Addenda or Change Orders.
   h. Sales Tax Exempt Forms (to be provided upon award of the Special Purchase).
      i. Form of Nebraska Resale or Exempt Sales Certificate.
      ii. Form of Purchasing Agent Appointment.
      <u>Note</u>: Any portion of this project used for providing water service, such as pipe for water mains, are not tax exempt and are subject to sales and use tax.
      <u>Note</u>: The remainder of this project, including items exclusively used for providing fire protection, such as fire hydrants, is exempt from sales and use tax.
   i. Any other Bid Documents and/or Bid Attachments listed in the Bid Opportunity Detail not attached as part of Exhibit A or listed in the above list of other Non-Attached Contract Documents.

This Contract, together with the other Contract Documents herein above mentioned, form this Contract and they are as fully a part of the Contract as if hereto attached or herein repeated.

The Contractor and JPA hereby agree that all the terms and conditions of this Contract shall, by these presents, be binding upon themselves, and their heirs, administrators, executors, legal and personal representatives, successors, and assigns.

IN WITNESS WHEREOF, the Contractor and JPA do hereby execute this Contract.

CONTRACTOR: **OLSSON ASSOCIATES**

By: _____
Title: _____

JPA: **WEST HAYMARKET JOINT PUBLIC AGENCY**

By: _____
Chris Beutler, Chairperson of the West Haymarket Joint Public Agency Board of Representatives

EXHIBIT A

Bid Documents

CITY OF LINCOLN NEBRASKA

LANCASTER COUNTY NEBRASKA

Return to Login • Supplier Registration

Bid Opportunity Detail

Bid Number 13-011 Addendum 4 (JPA Special Inspections for Pedestrian Bridge)
Close Date & Time 1/11/2013 12:00:00 PM Central
Bid Duration 24 days 3 hours 45 minutes 51 seconds

Bid Information

Bid Type	Bid
Issue Date & Time	12/18/2012 8:14:08 AM Central
Close Date & Time	1/11/2013 12:00:00 PM Central
Bid Status	Closed
Bid Notes	If you need assistance in preparing your bid, 1) Click the "Help" button in the upper right hand corner of any screen; 2) Contact our office at 402-441-7417 to set up a training session in Purchasing or assistance over the phone.

Contact Information

Contact Name	Vince M. Mejer
Address	Purchasing\City & County 440 S. 8th St. Lincoln, NE 68508 USA
Contact Phone	(402) 441-8314
Contact Fax	(402) 441-6513
Contact Email	vmejer@lincoln.ne.gov

Bid Documents

Document	Format	Description
Invitation Document	Adobe (PDF)	PDF Invitation to Bid

Bid Attachments

Location	File Name	Description
Header	13-011 Adv.pdf (29KB)	Notice to Bidders
Header	JPA Insurance March 2012.pdf (236KB)	Insurance Requirements
Header	13-011 Specs..pdf (45KB)	Specifications
Header	870201 Special Provisions Parking Lot and Ped Bridge_Bridge Only Specials Watermark.pdf (592KB)	Special Provisions
Header	13-011 FTP site.pdf (127KB)	Plans and Drawings
Header	Contractor Qualification Form.xlsx (14KB)	Contractor Qualification Form
Header	Contractors Project Manager Qualification Form.xlsx (14KB)	Contractors Project Manager Qualification Form
Header	Exhibit C pdf.pdf (4.19MB)	Contractor Requirements
Header	Exhibit C-1(A) pdf.pdf (2.58MB)	Contractor's Right of Entry
Header	13-011 Adn1.pdf (8KB)	Addendum No. 1
Header	13-011ad2.pdf (7KB)	Addendum No. 2
Header	13-011ad3.pdf (6KB)	Addendum No. 3
Header	13-011ad4.pdf (93KB)	Addendum No. 4
Header	13-011 Proposal Form.xlsx (16KB)	Proposal Form (per Addendum No. 4, replaces previous form issued)

EXHIBIT A TO CONTRACT AGREEMENT

Advertise 1 time
Wednesday, December 19, 2012

City of Lincoln/Lancaster County
Purchasing Division
NOTICE TO BIDDERS

Sealed bids will be received by the Purchasing Agent of the City of Lincoln/Lancaster County, Nebraska **BY ELECTRONIC BID PROCESS** until: **12:00 pm, Friday, January 4, 2013** for providing the following:

WEST HAYMARKET PEDESTRIAN BRIDGE SPECIAL INSPECTIONS
Bid No. 13-011

Bidders must be registered on the City/County's E-Bid site in order to respond to the above Bid. To Register go to: lincoln.ne.gov (type: e-bid - in search box, then click "Supplier Registration")

Upon e-mail notification of registration approval, you may go to the E-Bid site to respond to this bid. Questions concerning this bid process may be directed to City/County Purchasing at (402) 441-8314 or (402) 441-7410 or *vmejer@lincoln.ne.gov*

EXHIBIT A TO CONTRACT AGREEMENT

Addendum No. 1

JPA Special Inspections for Pedestrian Bridge

13-011

Addenda are instruments issued by the City prior to the date for receipt of offers which will modify or interpret the specification document by addition, deletion, clarification or correction.

Please acknowledge receipt of this addendum in the space provided in the Attribute Section. Be advised of the following changes and clarifications to the City's specification and bidding documents:

1. Close Date for this bid has been changed to **Friday, January 4, 2013.**

Dated this 18nd day of December 2012.

Vince M. Mejer
Purchasing Agent

Addendum No. 2
JPA Special Inspections for Pedestrian Bridge
Bid No. 13-011

Addenda are instruments issued by the City prior to the date for receipt of offers which will modify or interpret the specification document by addition, deletion, clarification or correction. Please acknowledge receipt of this addendum in the space provided in the Attribute Section.

Be advised of the following changes and clarifications to the City's specification and bidding documents:

Question 1: **In the Scope of Services for the Sampling and Testing Services, Bid No. 13-011, under Section 6 'Bridge Material Sampling and Testing', which items are required for the testing agency to perform? Most of these items would be reviewed/ approved by the JPA's engineer/representative that is already on-site. Is this bid package intended to have the testing agency perform construction observation and management in addition to what the JPA's engineer/representative is performing.**

Answer "The intent was for material testing and review of material certification submittals associated with the new bridge construction similar to what NDOR's Material and Test Division would perform. This would include testing for the steel strands, reinforcing steel, concrete testing, and review of material certifications that are submitted for the bridge construction work. This would also include the review of the design mixes for the concrete since the concrete strengths specified for the cast-in-place deck and rails is higher than the concrete used for typical bridge construction in this area. This would not include the review of the detailed shop plans which would be completed by the design engineers.

This consultant would not perform the day to day observation of the work, tracking of quantities/work completed on the project and general coordination with the contractor. They would fall under the direction of the on-site construction project manager, who would rely on them to perform the necessary material testing and to provide the expertise on the review of the material certifications that are submitted for the bridge items (this would be similar to the support the NDOR's Materials and Test Division provides for NDOR bridge construction projects)."

All other Terms and Conditions shall remain unchanged.

Dated this 28th day of December, 2012

Vince M. Mejer
Purchasing Agent

Addendum No. 3
JPA Special Inspections for Pedestrian Bridge
Bid No. 13-011

Addenda are instruments issued by the City prior to the date for receipt of offers which will modify or interpret the specification document by addition, deletion, clarification or correction.

Please acknowledge receipt of this addendum in the space provided in the Attribute Section.

Be advised of the following changes and clarifications to the City's specification and bidding documents:

Due to the volume of questions received to date we need to extend the closing date.

Proposals are now due on Friday, January 11, 2013 same time.

Also, we will accept final questions by 12:00 noon on Monday, January 7, 2013.

All other terms and conditions shall remain unchanged.

Dated this 3rd day of January, 2013

Vince M. Mejer
Purchasing Agent

Addendum No. 4
JPA Special Inspections for Pedestrian Bridge
Bid No. 13-011

Addenda are instruments issued by the City prior to the date for receipt of offers which will modify or interpret the specification document by addition, deletion, clarification or correction.

Please acknowledge receipt of this addendum in the space provided in the Attribute Section.

Be advised of the following changes and clarifications to the City's specification and bidding documents:

1. **Question:** Item No. 5.2.1 – Do we need to test every bar designation or bar size? Contractor or rebar supplier cannot estimate number of different heat numbers they will use can you provide direction on how to provide a number of these tests to perform?

   Answer: No, the reinforcing steel is tested by heat numbers. For the purpose of this bid the bidders shall assume that there will be 18 rebar tests. Each of the 18 reinforcing steel tests shall include both a bend test and a pull test for each heat number supplied for the reinforcing steel. The total tests may vary based upon the actual heat numbers required for the bars supplied under this contract and that is why a unit price for each test is to be provided. This information was based upon discussions with a reinforcing steel supplier, the different size of bars and the total amount of reinforcing proposed for this project.

2. **Question**: Item 7.10 - Same question as #1, except regarding wire strands?

   Answer: Testing for the strands shall be for each reel of pre-stressing strand used for the project unless the reel has previously been tested and approved by a State Department of Transportation Agency such as the Nebraska Department of Roads. For the purpose of this bid, the bidders shall assume that there will be five tests performed for the pre-stressing steel strands. These numbers may change based upon the actual number of reels of strands utilized on the project and whether or not any of the reels have previously been tested and approved by a State DOT. A unit price per each test shall be provided and this will be used for payment of the tests. Post-tensioning strands shall be tested for each heat number. For the purpose of this bid, the bidders shall assume that there will be 6 tests performed for the post-tensioning strands.

3. **Question**: Can you find out if they want to make only 2 cylinders for 7 and 28 day breaks per NDOR requirement or want to have 1 -7 day and 3 -28 day breaks per ACI recommendations for 4 x 8 inch cylinders?

Answer: The contractor shall break 2 cylinders at 7 days and 2 at 28 days per NDOR requirements. In addition the contractor shall make two extra cylinders for each set of four cylinders to be broken and have them available for additional breaks if requested by the Engineer.

4. **Question**: Can you find out if they want to run the full tests on quality of the aggregates if the material is from a State Approved Source? These tests can be costly and if the source is approved by the State they are not typically completed.

   Answer: Full tests on soundness and quality of aggregates will not be required if aggregates are from an NDOR approved source.

5. **Question**: Could you clarify how many cylinders they would like for section 7.4, above in Section 7.3 we have 3 sets of 3 cylinders per week but all for 28 day strength and none for early breaks?

   Answer: The contractor will not be required to provide and test any cylinders for release, these cylinders will be provided and tested by the precast manufacturer. The contractor shall observe the testing of the cylinders to verify the concrete strengths prior to release of the pre-stressing strands. The bidders shall estimate that the precast fabrication work shall take a maximum of three weeks so a total of 27 sets of cylinders will be provided and tested. The actual number may vary based upon the length of fabrication and therefore a unit price is to be provided for the performance of each test.

6. **Question**: Section 7.8 refers to sampling and testing of trial mixes and has flexural strength of concrete for strength testing. From conversations with the precast plants they do cylinder breaks. Can you confirm that they want Flexural Strength and that the contractor will provide us the samples to observe or test?

   Answer: Mix designs for the high strength concrete that have been preapproved by NDOR or other State DOT will not require testing. If the precast fabricator proposes to use a mix design that has not been preapproved by NDOR or a State DOT then they shall provide cylinders and beam samples as required for testing by the contractor.

7. **Question**: Can you have the engineers clarify the number of samples of post tensioning strands they want to test?

   Answer: Refer to the questions above, 6 tests.

8. **Question:** I talked to the contractor and if we test every reel that would be 18 tests, they normally test 6 foot strands from each heat and not every reel. Are you going to add a section on the cost sheet for these tests?

   Answer: This is shown under Section 1, line item 5 in the proposal form.

9. **Question:** How many cubes do they want us to test on grout for the post-tensioning ducts? I assume you will want cubes on this material for strength tests. Can they provide specifications for grout strength, I did not find in specs or plans?

   Answer: The design team anticipates having a maximum of 4 sets of six (6) cubes taken for the grouting at the post-tension ducts. We will have two breaks per set at 14 days and 2 at 28 days. Two cubes shall be kept in reserve for each set to be tested if necessary, by the direction of the Engineer. The grout strength should be 5,000 psi at 28 days.

10. **Question:** Do you want any early breaks or additional cylinders for the wet splice at the girders, this material would need to make 10,000 psi prior to stressing?

    Answer: The contractor should allow for early breaks for the wet splices at the girders. For the purpose of the concrete testing at the wet splices, the number of sets is increased from 12 to 24. This will allow us to perform tests at 7, 10, 14, and 28 days as necessary to verify strength prior to post-tensioning. The concrete for the wet splices will need to attain a minimum strength of 10,000 psi prior to post-tensioning.

    Please note that Section 5.1.5 should be deleted and replaced with the following:

    5.1.5 Concrete Test Cylinders – Compressive Strength

    5.1.5.1 Anticipated number of sets of six (6) cylinders for Cast- in-place concrete for bridges (four cylinders tested and two cylinders will be held in reserve and tested if required by the Engineer):

    5.1.5.1.1 Abutment and Grade Beam – 4 Sets
    5.1.5.1.2 Piers – 4 Piers x 4 Sets/Pier = 16 sets
    5.1.5.1.3 Diaphragms and Turndowns – 5 sets
    5.1.5.1.4 Wet Splice at Girders – 24 sets
    5.1.5.1.5 Bridge Deck – 5 sets
    5.1.5.1.6 Bridge Rails – 12 sets
    5.1.5.1.7 Closure Slab Support Walls – 2 sets
    5.1.5.1.8 Closure Slab – 1 set

11. **Question:** How many meetings will we be required to attend, every other week or once a month for the project duration?

Answer: It is anticipated that the contractor will be asked to attend progress meetings on a weekly basis, for a total of approximately 36 progress meetings. The time for attendance at progress meetings, site visits by the Project Manager, Project Engineer, Testing Lab Manager or other staff outside of the site testing technician shall be included in the lump sum price bid for the Project Management, coordination and administration work associated with providing the required testing services. This lump sum shall include all costs associated with the time and expenses for all other personnel with the testing consultant, outside of the technician who is to perform the respective tests called for in the proposal, to support the testing services required under this contract. The estimated amount of time for these respective individuals and expenses shall be based upon the testing consultants past experience in providing testing services on other projects of similar scope and magnitude. The JPA will not consider any requests to increase the lump sum amount bid for the project management, attendance at meetings, coordination and administration portion of the work unless there is a change in the final completion dates for the construction contract for the bridge.

12. **Question:** Can you add a section of Batch Plant inspection on the proposal form if this is required during the on-site pours?

    Answer: A line item for Batch Plant inspections has been added to the proposal form. It is assumed that batch plant inspections will be required for major pours such as footings, columns, pier caps, abutment, deck and rails but they will not be required for all pours.

13. **Question:** What is the requirement for thermocouples, how many and when is this required?

    Answer: Cold weather concrete work shall be monitored by the construction observation and administration team. Therefore thermocouples will not be required by the contractor. Items 8 and 9 under Section 1 of the previous proposal form (Cold Weather Monitoring and Thermocouples) are deleted. Refer to the revised proposal form.

All other terms and conditions shall remain unchanged.

Dated this 8th day of January, 2013

Vince M. Mejer
Purchasing Agent

SCOPE OF SERVICES
WEST HAYMARKET PEDESTRIAN BRIDGE CONSTRUCTION MATERIAL SAMPLING AND TESTING SERVICES
BID NO. 13-011

1. SUPPLEMENTAL INSTRUCTIONS TO BIDDERS

1.1 The West Haymarket Joint Public Agency (JPA) intends to contract with an independent testing firm (JPA's Testing Representative) to provide material sampling, testing and precast/prestressed concrete inspection services for the West Haymarket Pedestrian Bridge construction.

1.2 Bid price shall include the complete cost of material sampling and testing services for the new Haymarket Pedestrian Bridge including labor, testing supplies and any other expenses required to complete the project according to Local Building Codes, the drawings, the specifications, and any other State or Federal guidelines.

1.3 Bidder shall submit bid documents and all supporting material via e- bid.

1.4 All inquiries regarding these specifications shall be directed via e-mail or faxed request to Vince M. Mejer, Purchasing Agent (vmejer@lincoln.ne.gov) Or Fax:(402)-441-6513

1.4.1 These inquiries and/or responses shall be distributed to prospective bidders electronically as an addendum.

1.5 This project will require various material sampling and testing services throughout the term of construction, which is scheduled from January 2013 – October 2013

2. VENDOR REQUIREMENTS

2.1 Vendor must submit a detailed and complete schedule of hourly rates for each type of employee that will be utilized on this project, as well as a final cost estimate for all testing and material sampling services requested.

2.2 Vendor shall submit all test reports to the Owner, Architect, Contractor, Engineer, and Project Manager.

2.3 Reports shall contain, at a minimum:

2.3.1 Date issued.

2.3.2 Project Title and description.

2.3.3 Testing Laboratory, name, address, and telephone number.

2.3.4 Name of inspector.

2.3.5 Location of observation.

2.3.6 Date and time of observation, test inspection, or sampling.

2.3.7 Weather conditions at the time of the observation, test inspection, or sampling.

2.3.8 Results and statement of compliance or non-compliance with the plans and specifications, of observation, test inspection, or sampling.

2.3.9 Interpretation of test results when requested by the Owner.

2.4 Vendor must coordinate weekly schedules and testing services with the JPA's Project Manager, PC Sports, and the Contractor.

2.5 Vendor will submit weekly time sheet information for all staff working on the project with their invoices.

2.5.1 PC Sports will verify information with the Contractor to ensure that Vendor's staff was on the job as submitted.

2.5.2 Failure to submit time sheet information with invoices may result in delayed payment to the Vendor.

2.6 Any deviations from these Specifications or the others contained in the Bid Attachments must be made on company letterhead and attached to the Response

Attachment section of the e-bid response.

2.7 Vendor shall provide the names and credentials of the individuals who will perform the testing services for this project on company letterhead as an attachment to the Response Attachment section of the e-bid response.

2.8 All rates, costs, and prices provided will be fixed for the duration of the project.

3. INSURANCE REQUIREMENTS

3.1 Awarded Vendor must provide an insurance Certificate of Accord meeting the JPA's requirements as outlined in the document attached to the Bid Attachment section titled Insurance Clause.

3.2 The Vendor must place the following information in the Description of Terms box on the Insurance Accord Certificate:

3.2.1 The JPA and BNSF are listed as Additional Insured.

3.3 All insurance must comply with the insurance requirements of BNSF as outlined.

4. PROJECT DESCRIPTION

4.1 West Haymarket Joint Public Agency (JPA) intends to contract with an independent testing firm (JPA's Testing Representative) to provide material sampling, testing and precast/prestressed concrete inspection services for the West Haymarket Pedestrian Bridge construction.

4.1.1 This scope provides for the material sampling and associated testing of the materials to be used in the construction of the new West Haymarket Pedestrian Bridge along with the review and approval of all material certifications and concrete mix designs for use in the construction of the bridge.

4.1.2 In addition this work shall include providing the required inspection services at the concrete plant during the fabrication of the precast/prestressed concrete girders to be used on this project.

4.2 All material sampling, testing and inspection services shall be provided in accordance with the requirements outlined in the Nebraska Department of Roads current Material Sampling Guide, the 2007 NDOR Standard Specifications for Highway Construction including all approved Supplemental Specifications, the Contract Special Provisions, and the requirements shown on the bridge plans for post- tensioning materials.

4.2.1 All tests shall be in accordance with the referenced A.S.T.M standards and shall be performed by an NDOR certified testing laboratory or as approved by the JPA.

4.2.2 Any material that does not meet the minimum standards as outlined on the plans, the Special Provisions or the NDOR Standard Specifications shall be rejected and replacement material provided, tested and approved for use by the JPA's Testing Representative.

4.3 On-site construction observation and geotechnical testing shall be performed by the Engineer or other representatives of the JPA.

4.3.1 All references in the NDOR Material Sampling Guide or other testing specifications to the NDOR or Owner shall mean the JPA or their designated Testing Representative selected to provide the material sampling and testing services on this project.

5. MATERIAL SAMPLING/TESTING FORCAST-IN-PLACE CONCRETE

5.1 Portland Cement Concrete Tests for Bridges:

5.1.1 Coarse Aggregate – Test Gradation and Quality

5.1.2 Fine Aggregate – Test Gradation and Quality

5.1.3 All Aggregate – Moisture Test

5.1.4 Plastic Concrete – Air Content and Slump

5.1.5 Concrete Test Cylinders – Compressive Strength

5.1.5.1 Anticipated number of sets of four (4) cylinders for Cast- in-place concrete for bridges:

5.1.5.1.1 Abutment and Grade Beam – 4 Sets

5.1.5.1.2 Piers – 4 Piers x 4 Sets/Pier = 16 sets.

5.1.3.1.3 Diaphragms and Turndowns – 5 sets

5.1.5.1.4 Wet Splice at Girders – 12 Sets

5.1.5.1.5 Bridge Deck – 5 sets

5.1.5.1.6 Bridge Rails – 12 sets

5.1.5.1.7 Closure Slab Support Walls – 2 sets

5.1.5.1.8 Closure Slab – 1 set

5.2 Reinforcement Bars (Including Dowel Bars)

5.2.1 Perform two destructive tests for every bar designation and heat number to verify compliance with A.S.T. M. Standard unless shipped from tested and approved stock with Manufacturer's Certified test results and Certificate of Compliance.

5.2.2 Perform an inspection of all reinforcing steel delivered to the job site and prior to placement within the structure to verify that all bent bars have been fabricated to meet the minimum bend radius as shown on the plans and as required by the Contract Documents.

6. BRIDGE MATERIAL SAMPLING AND TESTING

6.1 Bridge Deck Drainage System – Review/Approve Manufacturer's Certificate of Compliance

6.2 Caulking/Sealing Compounds – Review and verify on Current NDOR Approved Products List

6.3 Liquid Curing Compound – Review and verify Approved lot numbers are on current NDOR Materials and Research Division website.

6.3 Strip Seal – Review/Approve Manufacturer Certified Test Results and Manufacturer Certification of Compliance

6.4 Foam Insulation – Review/Approve Manufacturer Certification of Compliance is provided

6.5 Anchor Bolts – Review/Approve Manufacturer Certified Tests and Manufacturer Certification of Compliance.

6.5.1 If certified test results are not available perform destructive testing to verify strength and performance

6.6 Fixed and Expansion Bearings, TFE Type – Inspect bearing devices and Review/Approve submittals for Manufacturer Certified Tests and Manufacturer Certification of Compliance

6.7 Epoxy Compounds and Epoxy Type– Review submittals and verify that item is on current NDOR Approved Products List

6.8 Joint Sealing Fillers – Review submittals and verify that item is on current NDOR Approved Products List

6.9 Steel Piling and Structural Steel for Substructure and Superstructure – Review/Approve Manufacturer Certification of Compliance

6.10 Structural Steel Fasteners for Concrete Girder Bridges – Sample and destructive testing per requirements outlined in NDOR Material Sampling Guide.

6.11 Inserts, light rail, fence cable hold-downs and portal attachments – Review/Approve Manufacturer Certification of Compliance.

7. PRECAST/PRESTRESSED CONCRETE UNIT INSPECTION/TESTING

7.1 Plant Certification – Verify Concrete Fabricator's Plant is certified by NDOR and PCI.

7.2 Quality Control and Assurance at Plant Site

7.2.1 Concrete Cylinders – Minimum of three (3) sets of three cylinders per mix design per week of production and minimum of three (3) sets of three cylinders per each line of girders cast.

7.2.2 Samples to be taken at the same location within a load of concrete as Contractors/Fabricators QC samples.

7.2.3 JPA representative will choose the location of the samples within the load/girder.

7.3 Concrete Cylinder Testing – 28 Day Compressive strength, average of three cylinders.

7.3.1 The 28 day strength shall be used to validate the Contractors/Fabricators strength.

7.3.2 Note if Contractor/Fabricators 28 day test results are not within 10%, the Engineer will investigate variations.

7.3.3 JPA representative shall be on-site to witness all testing for all Acceptance Cylinders.

7.3.4 Test for Air Content (ASTM C231) and witness Slump Flow and Visual Stability Index tests.

7.4 Perform concrete cylinder testing to verify required concrete strength prior to girder prestressing release as well as prior to post- tensioning (in the case of post-tensioning performed before 28 days).

7.5 Inspection at Plant Site – Refer to policy in the NDOR Material and Sampling Guide for Precast/Prestressed Concrete Plant Inspection – NDOR Inspector (JPA Testing Representative in lieu of NDOR Inspector).

7.5.1 Inspection to be on a daily basis during fabrication of precast/prestressed structural units.

7.6 Mix Design Approval/Change Cement or Aggregate Source

7.7 Trial Mix – JPA Representative to review mix design and provide comments or concurrence.

7.8 Testing – Sampling and testing of two of the Contractor's trial tests.
Compression Strength – AASHTO T 22.

7.8.1 Flexure Strength of concrete (using simple beam with third point Loading). ASTM C 78.

7.8.2 Air Content– ASTM C231.

7.8.3 Witness Slump Flow and J Ring tests.

7.8.4 Approval – Review data to ensure specifications are met.

7.8.4.1 Approve mix designs.

7.9 Changes to Admixtures in Approved Mix Design

7.9.1 Perform Air Content test – ASTM C 231

7.9.2 Witness Slump Flow, Passing Ability and Visual Stability Index test

7.10 Prestressing and Post-Tensioning Steel Wire Strand – Perform destructive testing on sample from each reel unless sampled at the manufacturers plant by the testing agency of a State DOT.

7.11 Prestressed Concrete Fine/Coarse Aggregate – One sample for every 500 cubic yards of concrete

8. DOCUMENTATION OF TESTING AND INSPECTION

8.1 JPA Testing Representative shall provide full documentation of all testing completed on the project and shall submit the test results to the JPA's Construction Project Manager within 4 working days of completion of the tests.

8.2 JPA Testing Representative shall prepare certification to be included with the delivery of all precast/prestressed units to the job site that indicates the unit has been inspected at the concrete plant, all testing has been performed on the unit and all tests results meet the requirements of the contract documents.

8.2.1 This shall include a summary of all tests completed along with the results of the tests.

8.3 At the completion of the bridge construction, the JPA Testing Representative shall provide a bound copy of all testing completed along with the test results and approvals for the bridge materials.

8.3.1 This shall be provided in hard copy format as well as electronically in PDF format.

9. BNSF RAILWAY SPECIAL PROVISION

9.1 The attached Exhibit "C" provides the Contractor Requirements for work that will be completed on existing BNSF Railway property or within 50 feet of the BNSF property as part of this project.

9.1.1 While the JPA's Testing Representative will not be required to submit and execute a copy of the C-1(A) Agreement, the JPA's Testing Representative shall be required to strictly adhere to all other requirements as outlined, including those requirements relating to all required insurance.

9.1.2 The JPA's Testing Representative shall coordinate their work with the BNSF's Project Engineer, Mike Schaefer, or other designated representative at all times during completion of work on railroad property.

9.2 A portion of the requested testing and material sampling will occur within the BNSF right-of-way.

9.2.1 All employees of the JPA's Testing Representative that will be performing services within the BNSF right- of-way will need to be certified through the BNSF E-Rail Safe program and shall also have the required BNSF Contractor Safety Orientation.

9.2.2 This would include any employees working within or above the BNSF right-of-way.

9.3 Refer to www.contractororientation.com for information and requirements regarding the Contractor Safety Orientation.

9.4 Refer to https://www.e-railsafe.com/ev/servlet/hr.utilities.HRInfo for information and requirements regarding the BNSF E-Rail Safe certification.

10. COORDINATION WITH OTHERS

10.1 The JPA's Testing Representative shall coordinate their work with the Construction Project Manager and shall have sufficient personnel available on an on-call basis to perform the necessary testing for the bridge construction work.

10.1.1 This may require the JPA's Testing Representative to be present at all construction progress meetings to provide feedback on test results and to receive input on the proposed schedule for upcoming work and testing needed.

10.1.2 It is anticipated that progress meetings will be held on a weekly basis through substantial completion of the project.

10.2 A portion of the requested services may require the JPA's Testing Representative to access the Arena jobsite.

10.2.1 Any employees that will be entering the Arena jobsite for any purpose will be required to complete safety orientation training provided by Mortenson Construction prior to being allowed access to the site.

10.2.2 Currently the safety orientation training is conducted on Monday and Wednesday mornings at the Mortenson office located at 440 North 8th Street, and lasts approximately one hour.

10.2.3 The JPA's Testing Representative shall be responsible for contacting Mortenson for more information regarding the safety orientation and training.

10.2.4 The point of contact for Mortenson is: John Hinshaw – (502)-377-4194

SPECIAL PROVISIONS – BRIDGE PROVISIONS ONLY
WEST HAYMARKET JOINT PUBLIC AGENCY (2012)
HAYMARKET INFRASTRUCTURE IMPROVEMENTS
PARKING LOT, FESTIVAL SPACE & PEDESTRIAN BRIDGE
PROJECT NO. 870201

GENERAL CONTRACT REQUIREMENTS

The work as detailed on the plans shall be completed in accordance with the requirements of the 2011 City of Lincoln Standard Specifications for Municipal Construction, as supplemented by the Nebraska Department of Road's 2007 Standard Specifications for Highway Construction. The 2011 City of Lincoln Standard Specifications for Municipal Construction and the Nebraska Department of Road's 2007 Standard Specifications for Highway Construction (NDOR Standard Specifications), including all amendments, Supplemental Specifications and additions thereto effective at the date of the contract, the Special Provisions, plans, and all supplementary documents are essential parts of the contract. A requirement occurring in one is as binding as though occurring in all. They are intended to be complementary and to describe and provide for a complete project.

In addition, the geotechnical report prepared for the West Haymarket Project is hereby attached as part of the contract documents and the recommendations provided within shall be followed in completing the work. This report was prepared specifically for the work associated with the grading and embankment construction for this project. The recommendations contained within the geotechnical report with respect to compaction and placement of fills as well as preparation of subgrades shall supersede the requirements outlined in the City of Lincoln Standard Specifications for Municipal Construction.

The Contractor shall not take advantage of any apparent error, discrepancy or omission in the plan, specifications or geotechnical reports. Upon discovery of such an error, discrepancy or omission, the Contractor shall notify the Engineer immediately. The Engineer will then make such corrections or interpretations as necessary to fulfill the intent of the plans and specifications.

Materials or work described in words which, so applied, have known technical or trade meaning shall be held to refer to such recognized standards.

Figured dimensions on the plans shall be taken as correct but shall be checked by the Contractor before starting construction. Any errors, omissions, or discrepancies shall be brought to the attention of the Engineer and the Engineer's decision thereon shall be final. Correction of errors or omissions on the drawings or specifications may be made by the Engineer when such correction is necessary for the proper execution of the work

Any reference the City, or OWNER, in the City of Lincoln Standard Specifications for Municipal Construction shall be considered reference to the West Haymarket Joint Public Agency (JPA), its employees, or representatives hired by the JPA as a consultant for construction project management, observation or testing services. The JPA's address is 555 South 10th Street, Lincoln, Nebraska 68508.

This document was originally approved and sealed on November 1, 2012 by Thomas A. Leikam, a licensed professional engineer in the State of Nebraska E-6290. This media should not be considered a certified document.

JPA shall mean the West Haymarket Joint Public Agency, a joint administrative entity created under the Interlocal Cooperation Act, comprised of the City of Lincoln and the University of Nebraska – Lincoln for the purpose of implementing and overseeing the operation of the West Haymarket arena and infrastructure improvement projects.

The Contractor shall be responsible for printing all copies of the plans, Special Provisions and other contract documents necessary for their use and the use of their subcontractors in completion of the work. The JPA will not provide any hard copies of the plans or Special Provisions and the PDF documents provided for bidding shall be used by the Contractor to produce the required number of plan sets for use in construction of the project.

BRIDGE CONSTRUCTION

Construction of the bridge shall be in accordance with the requirements outlined in the pertinent sections of the State of Nebraska Standard Specifications for Highway Construction, 2007 Edition, the notes and details provided on the plans and these Special Provisions. Measurement and payment for the bridge construction items shall be as stipulated in the State of Nebraska Standard Specification.

Form liners shall be used in the construction of the bridge piers as shown on the plans. The Contractor shall submit a sample of the form liner to be used to the Engineer for review and approval prior to the start of the pier construction. Direct payment shall not be made for the form liners specified on the plans and the cost of installing the form liners and all other work associated with building the textured surface shall be considered subsidiary to the pay item for the pier concrete.

PILES AND PILE DRIVING

Description

The work of this section covers the Steel H piling, precast concrete piling and steel pipe piling work. All of this work shall be in accordance with Section 703 of the NDOR Standard Specifications for Highway Construction, except as modified by the following.

Construction Methods

Hammer and Equipment Approval

Fourteen working days before delivery of the equipment to the Project site, Contractor shall submit to the ENGINEER for approval a completed Pile and Driving Equipment Data Form (located at the end of this Section). This submission shall be for each pile type and hammer combination. The following information shall be submitted on the Pile and Driving Equipment Data Form.

A. Pile Driving Hammer: Make and model number, hammer serial number, manufacturer's rated energy, ram weight and stroke, and rated speed.
B. Driving Helmet: Make and model number, weight, and drawing showing all dimensions.
C. Hammer Cushion: Material type, thickness, cross-section dimensions, and manufacturer's data on stiffness and coefficient of restitution.

This document was originally approved and sealed on November 1, 2012 by Thomas A. Leikam, a licensed professional engineer in the State of Nebraska E-6290. This media should not be considered a certified document.

D. Accessory Equipment: Make and model number, operating pressure, rated capacity of the boiler or compressor, and diameter and length of hose connecting this equipment to hammer.
E. Pre-Boring Equipment: Type and detailed procedures for their use.

Contractor notification of acceptance or rejection of Contractor's proposed pile driving equipment will be made within 14 working days of receipt of the completed Pile and Driving Equipment Form.

Approval of the pile driving equipment does not relieve Contractor from providing a driving system that will drive the piling to the required ultimate capacity within the allowable driving stresses specified. If the maximum allowable stresses are exceeded or the driving system does not meet the requirements specified herein, Contractor shall be responsible for modifying the driving system and submitting a revised Pile and Driving Equipment Form to the ENGINEER for approval.

All proposed driving equipment is subject to satisfactory field performance.

Determination of Bearing Capacity
Piles shall be driven to a minimum driving resistance as determined by the ENGINEER, based on the NDOR pile driving equation. In addition, these piles shall be driven to estimated tip elevation determined by the ENGINEER unless termination of driving at a higher tip elevation is authorized by the ENGINEER to avoid damage to the pile. Should a pile meet absolute refusal at a tip elevation higher than the estimated tip elevation, Contractor shall immediately inform the ENGINEER. The ENGINEER will analyze the pile and direct Contractor to perform corrective measures as required.

The ENGINEER may revise the pile driving criteria during the Project based on the actual driving conditions encountered and changes to the pile driving equipment or performance.

This document was originally approved and sealed on November 1, 2012 by Thomas A. Leikam, a licensed professional engineer in the State of Nebraska E-6290. This media should not be considered a certified document.

PILE and DRIVING EQUIPMENT DATA FORM

Contract No.: _____ Structure Name and/or No.: _____

Project _____

Piling Driving Contractor: _____

County: _____

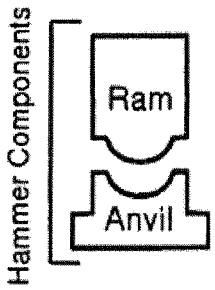

Hammer

Manufacturer: _____ Model No.: _____

Hammer Type: _____ Serial No.: _____

Manufacturers Maximum Rated Energy: _____ (ft-lbs)

Stroke at Maximum Rated Energy: _____ (feet)

Range in Operating Energy: _____ to _____ (ft-lbs)

Range in Operating Stroke: _____ to _____ (ft)

Ram Weight: _____ (lbs)

Modifications: _____

_____

Striker Plate

Weight: _____ (lbs) Diameter: _____ (inches)

Thickness: _____ (inches)

Hammer Cushion

Material: _____

Area: _____ (in^2)

Thickness of Plate: _____ (inch)

No. of Plates: _____

Total Thickness of Hammer Cushion: _____ (inch)

Modulus of Elasticity (E): _____ (psi)

Coefficient of Restitution (e): _____

Helmet (Drive Head)

Weight: _____ (lbs)

One Piece Helmet?

Yes ☐ No ☐

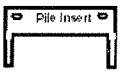

Pile Insert (Bonnet)

Weight of Insert _____(lbs) Total Helmet Weight_____(lbs)

Pile Cushion

Material: _____

Area: _____ (in^2) Thickness/Sheet: _____ (inch)

No. of Sheets: _____

Total Thickness of Pile Cushion: _____ (inch)

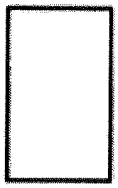

Pile

Pile Type: _____

Wall thickness: _____ (inch) Taper: _____

Cross Sectional Area: _____ (in^2) Weight/foot: _____ (lbs)

Order Length: _____ (feet)

Ultimate Pile Capacity: _____ (tons)

Driving Shoe/Closure Plate Description: _____

_____

Description of Splice (If Applicable): _____

_____

SUBMITTED BY: _____ **DATE:** _____

Telephone No.: _____ **FAX No.:** _____

This document was originally approved and sealed on November 1, 2012 by Thomas A. Leikam, a licensed professional engineer in the State of Nebraska E-6290. This media should not be considered a certified document.

EXHIBIT A TO CONTRACT AGREEMENT

PILES AND PILE DRIVING
(G-6-0611)

Paragraph 1.m. (1) of Subsection 703.03 of the Standard Specifications for Highway Construction is void and superseded by the following:

All welding to be done on steel piles shall be in accordance with the plans and the applicable requirements of Section 708 in the Standard Specifications. Welder qualification certification is required and must be submitted to the Bridge Fabrication Manager for approval prior to any welding.

All field welding on steel piles shall be done in the SMAW process using electrode E7018.

For bridges with design live load "HL-93", the tables in paragraph 4.c. of Subsection 703.03 (on pages 444 and 445) in the Standard Specifications are void and superseded by the following:

Dynamic Formulas (English and Metric)

Diesel Hammers:

$P = \frac{4.0\,E}{S+0.5}$ For all piles driven from the top with a single-acting diesel hammers (English)

$P = \frac{3.27\,E}{S+12.7}$ For all piles driven from the top with a single-acting diesel hammers (Metric)

Where:

P = the bearing capacity, in kips (English) or kN (Metric)

W = the mass of the ram, in kips (English) or kg (Metric)

M = the mass of the pile and driving cap, in kips (English) or kg (Metric)

S = the average penetration per blow, in inches (English) or millimeters (Metric), of the last 10 blows for diesel hammers

H = the height of fall of the ram, in feet (English) or meters (Metric) (less twice the height of bounce for gravity and steam hammers)

E = the energy per blow in foot-kips (English) or meter-kilogram (Metric). For single-acting diesel hammers, E + W x H

Unless permitted by the NDR Geotechnical Section, all piles driven with hammers other than single-acting diesel hammers shall be tested with the Pile Driving Analyzer to verify capacity.

$P = \frac{4.9\,WH}{S+0.35} \times \frac{W}{W+M}$ For gravity hammers

$P = \frac{4.9\,E}{S+0.1} \times \frac{W}{W+M}$ For steam hammers

$P = \frac{2.2\,E}{S+0.1}$ For driving mandrel driven pile shells

This document was originally approved and sealed on November 1, 2012 by Thomas A. Leikam, a licensed professional engineer in the State of Nebraska E-6290. This media should not be considered a certified document.

Paragraph 7.a. of Subsection 703.03 is void and superseded by the following:

a. "Practical Refusal" occurs when actual bearing capacity is 2.0 times the Design Pile Bearing.

Paragraph 2. of Subsection 703.05 is void and superseded by the following:

2. a. (1) Provided that the Contractor furnishes the Engineer signed purchase orders for bearing and sheet piling, authorized "cutoff" of bearing and sheet piling shall be made at the invoice price per linear foot (meter) of bearing piling, and per square foot (meter) of sheet piling.

(2) The signed purchase orders shall be furnished at the pre-construction conference.

b. In those cases where signed purchase orders for bearing and sheet piling are not furnished at the pre-construction conference, authorized "cutoff" of bearing and sheet piling shall be made at 60 percent of the piling's contract unit price.

c. No payment is made for "cutoff' beyond the order length.

d. When bearing or sheet pile are authorized for cutoff and are suitable for use as spliced material for the same purpose on the project, the length of material subsequently driven as service piling shall be deducted from the payment for cutoff. No piece of piling can qualify for more than one measurement as pay cutoff.

Paragraph 3. of Subsection 703.05 is void and superseded by the following:

3. Splices ordered by the Engineer shall be paid for at 5 times the unit bid price (2 times the unit bid price for Metric projects) for HP steel piling, pipe, piling, and cast-in-place piling; and at 20 times the unit bid price (7 times the unit bid price for Metric projects) for driving and build-up splices for precast/prestressed concrete piling.

PRECAST OR PRECAST/PRESTRESSED CONCRETE STRUCTURAL UNITS (G-14-0412)

Section 705 in the Standard Specifications is void and superseded by the following:

Description

1. This work consists of all labor, materials, and equipment required in the production of Precast or Precast/Prestressed Structural Units.

2. Contract plans shall be supplemented by Contractor-provided working drawings submitted in accordance with Subsection 105.02.

This document was originally approved and sealed on November 1, 2012 by Thomas A. Leikam, a licensed professional engineer in the State of Nebraska E-6290. This media should not be considered a certified document.

Material Requirements

1. The materials used shall meet the requirements prescribed in Table 705.01.

Table 705.01

Material Requirements	
Applicable Material	**Section**
Concrete	1002
Admixtures	1007
Water	1005
Fine Aggregate	1033
Course Aggregate	1033
Fly Ash	1008
Spiral Reinforcing Wire	1023
Prestressed Steel Strand	1026
Post-Tensioning Assembly Steel	1025

2. The concrete class used in the manufacture of Precast or Precast/Prestressed Structural Units shall be shown in the plans.

3. The Contractor shall be responsible for the Concrete Mix Design. Concrete Mix Designs shall be proportioned in accordance with ACI Standard 318 and the following additional requirements:

   a. The mix designs or change to a mix design shall be submitted for approval to the Engineer 4 weeks before beginning any concrete work. Refer to Table 705.03 for required testing for any mix design.

   b. Concrete shall consist of Type I, Type II, or Type III Portland cement, aggregate, air-entraining admixture, and water. Concrete may also contain Class C or Class F fly ash, Slag Cement or Silica Fume and ASTM C 494 approved Type A, Type B, Type D, and Type F admixtures.

   c. No change shall be made in the approved Concrete Mix Design during the progress of the work without the prior written permission of the Portland Cement Concrete (PCC) Engineer.

4. Reinforcement shall be furnished, handled, stored, and placed in accordance with the requirements of Section 707.

5. Welding of reinforcing steel is prohibited unless specifically authorized by the Engineer.

6. Prestressing steel other than that specified in the plans or Special Provisions may be furnished with the approval of the Engineer. The yield and ultimate strength and other pertinent characteristics of this steel shall be submitted to the Engineer.

7. The area of broken wires shall not exceed 2% of the cross sectional area of the stressing strands when the number of strands is 14 or less.

This document was originally approved and sealed on November 1, 2012 by Thomas A. Leikam, a licensed professional engineer in the State of Nebraska E-6290. This media should not be considered a certified document.

8. No more than 1 broken wire will be allowed in a single strand.

9. Bars for post-tensioning shall be of high tensile strength steel. They shall be equipped with wedge type end anchorages which will develop the minimum specified ultimate bar stress on the nominal bar area. The physical properties of the bar steel determined by static tensile tests shall conform to the requirements in Table 705.02.

Table 705.02

High Strength Steel Post-Tensioning Requirements
Ultimate Stress ..... 145,000 psi (1000 MPa) minimum
Stress at 0.7% Elongation 130,000 psi (900 MPa) minimum
Stress at 0.3% Elongation .. 75,000 psi (500 MPa) minimum
Elongation in 20 Diameters .....4% minimum
Modulus of Elasticity25,000,000 psi (172,00 MPa) minimum
Diameter Tolerance..... Plus or Minus 0.1 inch (2.5 mm)

10. Materials specified for testing shall be furnished 30 days before the anticipated time of use. All materials required for testing shall be furnished by the Contractor to the Engineer without additional costs to the Department. The Engineer shall select a representative sample length for the various prestressed steel as follows:

    a. Six feet (1.8 m) for wires requiring heading.

    b. For wires not requiring heading, sufficient length to make up one parallel-lay cable 6 feet (1.8 m) long consisting of the same number of wires as the cable to be furnished.

    c. Six feet (1.8 m) between near ends of fittings for a strand furnished with fittings.

    d. Six feet between threads at the ends of bars furnished with threaded ends.

11. If the anchorage assemblies are not attached to prestress steel samples, 2 anchorage assemblies shall be furnished for testing, complete with distribution plates of each size or type of prestress steel to be used.

12. Any defective material shall be rejected.

13. Concrete quality control shall be the responsibility of the Contractor. Concrete shall be sampled and tested as shown in Table 705.03.

    a. The Contractor's test results are the basis for acceptance. If the Department's quality assurance testing is not within 10% of the Contractor's test results on any given sets of three cylinders, the Engineer will initiate an investigation to find the cause of the variation between the Contractor's and the Department's test results. While the investigation is in progress, the Department will continue with quality assurance testing as shown in Table 705.03. Any structural units represented by these tests will be subject to rejection.

This document was originally approved and sealed on November 1, 2012 by Thomas A. Leikam, a licensed professional engineer in the State of Nebraska E-6290. This media should not be considered a certified document.

b. If more than one set of cylinders is required per Table 705.03 for a single Precast or Precast/Prestressed Concrete Structural Unit, each set of three cylinders will be averaged separately. All averaged sets must meet the minimum design strengths.

c. If 40 cubic yards makes more than one Precast or Precast/Prestressed Concrete Structural Unit and the Contractor elects to make the minimum set of cylinders, that single set of cylinders will be used to determine the girder strength for all of the Precast or Precast/Prestressed Concrete Structural Units that set of cylinders represents. If the Contractor elects to make more than the minimum cylinders required, in order to represent each Precast or Precast/Prestressed Concrete Structural Unit, only the set of cylinders representing the corresponding unit will be used to determine the strength of that unit.

This document was originally approved and sealed on November 1, 2012 by Thomas A. Leikam, a licensed professional engineer in the State of Nebraska E-6290. This media should not be considered a certified document.

Table 705.03 Precast Plant Approval		
Plant Certification	**Contractor** Prestressed: Shall submit PCI Certification every two years to the PCC Engineer. Precast: Precast plants that are not PCI certified will be NRMCA certified.	**NDOR** Approve and add to site Manager.
Quality Control & Quality Assurance at Plant Site		
Frequency	**Daily**	**Weekly**
Number of Acceptance Cylinders to be fabricated	**Contractor** **Quality Control** - Will make a minimum of six cylinders for every 40 cubic yards. - NDOR personnel will record results and enter into site manager. These samples will be identified, and tagged by NDOR. NDOR shall have access to these QC samples at all times.	**NDOR Personnel** **Quality Assurance** - Will make a minimum of three sets of three cylinders per mix design per week of production. - The NDOR samples will be taken at the same location within a load of concrete as the Contractor's QC samples. NDOR shall choose the location of these samples within the load/girder. - Enter results into Site-manager.
Required Testing for Acceptance Cylinders	**Contractor Laboratory** **-7 Day Compressive Strength:** three cylinders averaged at Contractor's discretion. **-28 Day Compressive Strength:** three cylinders averaged. **-56 Day Compressive Strength:** The remaining three cylinders will be tested for 56 day compressive strengths; only if the 28 day compressive strength failed to meet specification requirements. **NOTE:** No cylinders are to be discarded until all design strengths are met and the prestressed unit(s) is accepted. - Air Content – ASTM C 231 - Slump Flow – ASTM C 1621 - Visual Stability Index (VSI) Appendix of ASTM C 1611 is required.	**NDOR Laboratory:** **-28 Day Compressive strength:** Three cylinders averaged. • The 28 day compressive strength is to be used for validation of the Contractor's strength. • **NOTE: If the Contractor's and Department's 28 day test results are not within 10%, the Engineer will investigate the variation.** • NDOR will be on-site to witness the testing for all Acceptance Cylinders. - Air Content – ASTM C 231 - Witness Slump Flow & Visual Stability Index
Inspection at Plant Site		
Frequency	**Weekly**	
Required Inspection	Refer to policy in the Material & Sampling Guide for the following: • Precast/Prestressed Concrete Plant Inspection-NDOR Inspector • Precast/Prestressed Concrete Plant Inspection-Fabricator Inspector	

This document was originally approved and sealed on November 1, 2012 by Thomas A. Leikam, a licensed professional engineer in the State of Nebraska E-6290. This media should not be considered a certified document.

Table 705.04 Mix Design Approval/ Change Cement or Aggregate Source		
Trial Mix	**Contractor** Data from 15 trial tests as a minimum (New Mix Design) Data from 5 trial tests as a minimum (Change in Cement or Aggregate)	**NDOR** Contractor is responsible to notify PCC Engineer 4 weeks in advance.
Testing	**Contractor** - Compression Strength – AASHTO T 22 - Flexure Strength of concrete (using simple beam with third-point Loading) - ASTM C 78 - Air Content – ASTM C 231 - Slump Flow – ASTM C 1611 - Passing Ability by J-Ring Method - ASTM C 1621 - Visual Stability Index (VSI) - Appendix of ASTM C 1611 is required.	**NDOR** Sampling and Testing two of the Contractor's trial test. - Compression Strength – AASHTO T 22 - Flexure Strength of concrete (using simple beam with third-point Loading) - ASTM C 78 - Air Content – ASTM C 231 - Witness (Slump Flow & J Ring)
Approval	**Contractor** Submit data from lab testing to PCC Engineer.	**NDOR** - Data review / ensure specification are met - Approve mix design - Add to Site Manager with NDOR Mix Design Number
Change to Admixtures in Approved Mix Design		
Testing/Approval	**Contractor** Contractor is responsible to notify the PCC Engineer 3-4 weeks in advance. - Air Content – ASTM C 231 - Slump Flow – ASTM C 1621 - Passing Ability by J-Ring Method - ASTM C 1621 - Visual Stability Index (VSI) Appendix of ASTM C 1611 is required.	**NDOR** - Air Content – ASTM C 231 - Witness Slump Flow, Passing Ability and Visual Stability Index

This document was originally approved and sealed on November 1, 2012 by Thomas A. Leikam, a licensed professional engineer in the State of Nebraska E-6290. This media should not be considered a certified document.

14. Plant Approval Requirements:

a. All Prestressed Concrete Structural Units shall be produced in a Precast/Prestressed Concrete Institute (PCI) certified plant.

b. All concrete for Precast/Prestressed Concrete Structural Units shall be produced at a PCI or NRMCA certified plant.

(1) Whenever there is reason to suspect a problem with the equipment, any or all of the equipment may be inspected.

c. The method of manufacture and quality of concrete are also subject to Department approval/inspection.

d. A Contractor proposing to furnish Precast or Precast/Prestressed Structural Units shall submit the following additional details to the Department concerning the method of manufacture:

(1) Type, number, size, and location of the prestressing elements, and the name of the manufacturer of the post-tensioning or pretensioning elements.

(2) Complete information as to type, size, and method of installation of devices for anchoring post-tensioning elements.

(3) The proposed manufacturing methods and the plans and design details of proposed casting beds and forms.

e. The use of portable pretensioning beds for the manufacture of concrete structural units or piles will not be allowed.

15. Mix Design Approval Requirements:

a. The results of 15 individual trial mixes shall be produced using the same process as the plants normal production run. All test results of individual trial mixes shall be given to the Engineer. The test results collected shall include the following:

(1) The release and 28-day compressive strength test results shall conform to AASHTO T 22.

(2) The water/cement ratio.

(3) The air content (between 2.0 percent and 6.0 percent inclusive).

(4) The cement, fly ash, Slag Cement and Silica Fume content.

(5) The amount of fine aggregate, coarse aggregate, and sand and gravel.

(6) Slump Flow test results shall conform to ASTM C 1611

This document was originally approved and sealed on November 1, 2012 by Thomas A. Leikam, a licensed professional engineer in the State of Nebraska E-6290. This media should not be considered a certified document.

(7) Passing Ability by J-Ring Method test results shall conform to ASTM 1621.

(8) Visual Stability Index (VSI) test results shall conform to the Appendix of ASTM C 1611.

(9) Flexure Strength of concrete at 28-day test results shall conform to (using simple beam with third-point loading) ASTM C 78.

b. Any change of cement or aggregate source which must be on the NDR Approved Product List shall require 5 new individual trial mixes. Refer to Table 705.04 for required testing procedures.

c. Any changes using admixtures, the Contractor shall verify the properties of the concrete. Refer to Table 705.04 for the required testing procedures.

d. The compressive strength test results of 15 individual trial mixes shall be performed by the Contractor. An individual trial mix shall consist of two sets of three cylinders with three cylinders being averaged at release and at 28-day. One set shall be taken within the first third of the load and the second set shall be taken within the two thirds of the load.

e. All tests for elastic modulus and compressive strength will be conducted using 4 inch x 8 inch (100 mm x 200 mm) cylinders.

f. The flexure strength test results of 15 individual trial mixes shall be performed by the Contractor. An individual trial mix shall consist of two sets of two beams with two beams being averaged at 28-day. One set shall be taken within the first third of the load and the second set shall be taken within the two thirds of the load.

Construction Methods

1. The Contractor shall construct Precast or Precast/Prestressed Structures and piles as shown in the plans.

2. The Contractor shall provide the Engineer a 4-week production schedule that is updated as necessary. If the Engineer is given less than 1 NDOR work day notice of a schedule change, then the fabricator may not proceed until the Engineer has reviewed the change. The Engineer may observe any or all of the procedures and shall have access to all reported data at any time during fabrication. The Engineer shall report any inconsistencies to the job superintendent.

3. The concrete producer shall report the following information for each load of concrete used to fabricate girders:

   a. Brand, mill, type, certified test number, and weight of cement.

   b. Brand, mill, class, certified test number, and weight of fly ash.

This document was originally approved and sealed on November 1, 2012 by Thomas A. Leikam, a licensed professional engineer in the State of Nebraska E-6290. This media should not be considered a certified document.

c. Type, source, location, weight, and free moisture content for each aggregate. Aggregate moisture shall be determined according to NDR T 506 for each half day.

d. Source, type, name, and amount of each admixture.

e. Water added during batching and at placement site.

f. Time water and cement are initially mixed into the batch.

g. Time placement is completed.

4. Tensioning:

a. Methods:

(1) In all methods of tensioning, the stress induced in the prestressing elements shall be measured by the Contractor both with jacking gauges and by elongation of the elements; and these results shall be the same within a 5% tolerance.

(2) Means shall be provided for measuring the elongation of reinforcement to at least the nearest 1/8 inch (3 mm).

(3) All steel stressing devices, whether hydraulic jacks or screw jacks, shall be equipped with accurate reading calibrated pressure gauges, rings, or other devices as applicable to the jack being used.

(4) All devices shall be calibrated and, if necessary, recalibrated so as to allow the stress in the prestressing steel to be computed at all times.

(5) A certified calibration curve shall accompany each device.

(6) Safety measures must be taken by the Contractor to prevent accidents due to possible breaking of the prestressing steel or the slipping of the grips during the prestressing process.

b. Measurement:

(1) Pressure gauges, load cells, dynamometers, and any other devices used in determination of loads and/or pressures shall be accurate in their effective range within a 2% tolerance.

(2) Such equipment shall be calibrated by an approved testing laboratory.

(3) The Contractor's laboratory shall furnish calibration curves for each device and shall certify the curves as being accurate and verifiable.

(4) The calibration of tensioning devices shall be accomplished in place.

This document was originally approved and sealed on November 1, 2012 by Thomas A. Leikam, a licensed professional engineer in the State of Nebraska E-6290. This media should not be considered a certified document.

(5) The configuration of jacks, gauges, and other components during calibration shall be exactly the same as during the actual stressing operation.

(6) The method of calibration shall be as approved by the Engineer.

(7) Tensioning devices shall be calibrated at least once a year and at any time a system appears to be operating in an erratic or inaccurate manner or gauge pressure and elongation measurements fail to correlate.

c. If the strand tension indicated by the gauge pressure and by elongation methods fail to agree within 5%, the operation shall be carefully checked and the source of error determined before proceeding further.

d. Measurement Consideration:

(1) The Contractor's elongation and jacking pressure measurements shall make appropriate allowance for friction and all possible slippage or relaxation of the anchorage.

(2) For pretensioned members, independent references shall be established adjacent to each anchorage by the Contractor to indicate any yielding or slippage that may occur between the time of initial stressing and final release of the cables.

(3) The Contractor may tension straight post-tensioned tendons from one end. Curved tendons shall generally be stressed by simultaneous jacking from both ends.

e. In all stressing operations, the Contractor shall keep stressing force symmetrical about the member's vertical axis.

5. Stressing Procedure:

a. Prestressing methods are shown in the plans. When the Contractor elects to use a method other than that shown in the plans, the Contractor shall submit complete shop plans for the proposed method.

b. Pretensioning Method:

(1) The amount of stress to be given each strand by the Contractor shall be as shown in the plans.

(2) All strands to be prestressed in a group shall be brought to a uniform initial tension before being given their full pretensioning. This uniform initial tension of approximately 1,000 to 2,000 pounds (450 to 900 kg) shall be measured by a dynamometer or other approved means so that it can be used as a check against the computed and measured elongation.

This document was originally approved and sealed on November 1, 2012 by Thomas A. Leikam, a licensed professional engineer in the State of Nebraska E-6290. This media should not be considered a certified document.

(3) After initial tensioning, either single strand or multiple strand groups shall be stressed until the required elongation and jacking pressure are attained and reconciled within the 5% tolerance.

(4) With the strand stressed in accordance with the plan requirements and these *Specifications*, and with all other reinforcing in place, the Contractor shall cast the concrete to the lengths desired. Strand stress shall be maintained between anchorages until the concrete has reached the compressive strength specified in the plans.

c. Post-tensioning Method - For all post-tensioned elements, the Contractor shall set the anchor plates exactly normal in all directions to the axis of the bar or tensioning strand. Parallel wire anchorage cones shall be recessed within the beams. Tensioning shall not be done until the concrete has reached the compressive strength specified in the plans.

d. Combined Method - In the event that the girders are manufactured with part of the reinforcement pretensioned and part post-tensioned, the applicable portions of the requirements listed above shall apply to each type.

6. Forms:

a. Forms for Precast or Precast/Prestressed Concrete Structural Units shall conform to the requirements for concrete formwork as provided in Subsection 704.03.

b. Precast or precast/prestressed forms shall be accessible for the vibration and consolidation of concrete.

c. If the ambient temperatures are above 90°F (32°C), precautions shall be taken so the forms, reinforcing steel and steel beams of structural units will be the ambient temperature.

7. Placing Concrete:

a. The Contractor shall provide the Department a 4-week production schedule that is updated as necessary. Unscheduled production changes may delay fabrication. Unscheduled production may result in rejection of Precast or Precast/Prestressed Concrete Structural Units.

b. The Engineer may observe any or all of the procedures. The Contractor shall provide access to all reported data at any time during fabrication. The Engineer will report any inconsistencies to the job superintendent.

c. Concrete shall not be placed before completing the forming and placing of reinforcement.

This document was originally approved and sealed on November 1, 2012 by Thomas A. Leikam, a licensed professional engineer in the State of Nebraska E-6290. This media should not be considered a certified document.

d. Placing Procedure:

(1) Concrete shall be placed continuously in each unit, taking care to avoid horizontal or diagonal planes of weakness.

(2) However, if there is a delay in delivery of concrete or for some other reason placement is interrupted for more than 30 minutes, then the concrete shall be rejected.

e. Consolidation:

(1) Whether concrete requires vibration or self-consolidating concrete is used, special care shall be exercised to work and consolidate the concrete around the reinforcement and to avoid the formation of stone pockets, honeycombs and other defects.

(2) Self-consolidated concrete (SCC) shall not be vibrated. Rodding of Self-Consolidated Concrete (SCC) is permissible in areas of tight reinforcement.

(3) The other concrete shall be consolidated by vibrating.

f. The concrete shall be a homogenus mixture and shall not contain cement balls.

g. The forms shall be overfilled, the excess concrete screeded off, and the top surfaces finished to a uniform, even texture.

h. Each Precast or Precast/Prestressed Concrete Structural Unit shall be stamped or marked with an identification number and its manufacture date.

i. Environmental Limitations:

(1) The optimum range of concrete temperatures from the time the concrete is completely mixed until the beginning of the presteam segment of the steam curing cycle shall be 50° to 95°F (10° to 35°C). Failure to operate within the optimum range shall be cause for curtailment of operations. During the presteam segment of the curing cycle, the temperature of the concrete shall not exceed 100°F (38°C) nor fall below 50°F (10°C). These temperature restrictions apply when heat is supplied to the curing enclosure prior to initial set.

(2) When placing concrete under cold weather conditions (ambient air temperature less than 36°F [2°C]), the Cold Weather Specifications in Sections 1002 and 704 shall be followed.

(3) Forms and reinforcing materials shall be preheated to a minimum temperature of 40°F (4°C) and a maximum temperature not to exceed that of the concrete at the time of placement.

This document was originally approved and sealed on November 1, 2012 by Thomas A. Leikam, a licensed professional engineer in the State of Nebraska E-6290. This media should not be considered a certified document.

(4) The Contractor may preheat the drums of the mixer-trucks to the limits set for forms and reinforcing, but under no condition shall heat be applied to the drums while they contain any of the batch materials or concrete.

8. Curing:

a. General:

(1) The Contractor shall cure the concrete with wet burlap, waterproof covers, polyethylene sheets, or liquid membrane-forming compounds. Curing with liquid membrane-forming compounds shall be accomplished in accordance with the requirements of Section 1012 and Subsection 704.03, except that liquid membrane-forming compounds shall not be used on that portion of precast/prestressed concrete girders, twin tees, or bridge beams upon which concrete will be cast later.

(2) Water spray curing or other moist curing methods may be used subject to the approval of the Engineer.

(3) The period of concrete curing shall be determined by the results of the compressive strength test on cylinders made during the progress of the work and cured to closely approximate the concrete strength of the product it represents.

(4) Side forms may be removed 12 hours after placing the concrete, provided curing is continued with one of the approved Department curing procedures.

b. Steam or radiant heat will be allowed for accelerated curing provided the following procedure is adhered to:

(1) Curing chambers shall be reasonably free of leakage and shall have a minimum clearance of 3 inches (75 mm) in order to insure adequate circulation of heat. The relative humidity within the curing enclosure shall be maintained between 70 and 100 percent.

(2) Temperature:

(i) One approved continuous recording thermometer for each 115 feet (35 m) of casting bed, with a minimum of 2 continuous recording thermometers, shall be located in each enclosure or curing chamber.

(ii) Continuous temperature record charts for each casting shall be available to the Engineer for examination and approval at any time.

(iii) If the temperature records or other temperature readings taken by the Engineer indicate that manual control of heat is producing temperature changes in excess of those specified, the Engineer may reject the Precast or Precast/Prestress Structural Unit.

(iv) Temperature of the curing concrete shall be 50°F to 105°F (10°C to 40°C) and shall be maintained near placement temperature until the concrete has reached initial set as determined by ASTM C 403 "Time of Setting of

This document was originally approved and sealed on November 1, 2012 by Thomas A. Leikam, a licensed professional engineer in the State of Nebraska E-6290. This media should not be considered a certified document.

Concrete Mixture by Penetration Resistance". These temperature restrictions apply when heat is supplied to the curing enclosure prior to initial set.

(v) The temperature rate of rise shall not exceed 60°F (15.5°C) per hour.

(3) The concrete shall be completely enclosed with a waterproof curing chamber during accelerated curing periods.

(4) Steam jets shall not be directed at the concrete or the steel forms.

(5) If the temperature of the concrete rises above 175°F (79°C), the concrete shall be rejected.

(6) The temperature in the concrete shall be maintained so that at any given time the difference between the highest and lowest temperature station readings will not be more than 30°F (-1°C). If the temperature varies more than 30°F (16°C), the product shall be rejected.

(7) Eight hours after placing the concrete, individual sections may be uncovered to remove their forms. The curing may be discontinued during this operation. The section shall not be left uncovered longer than necessary and never longer than 30 minutes. Waterproofed covers shall be used to recover the product.

(8) After the heat source has been turned off, the curing cover shall be maintained in place during the curing period until the release strength has been reached.

(9) Detensioning shall be accomplished before the temperatures of the units drop more than 60°F from the peak cure strength temperature and while they are still moist.

(10) Master slave heat curing system may be used for curing quality control cylinders.

c. After detensioning, prestressed concrete girders shall be inspected for cracking. If any cracks are discovered between quarter points in the middle of the girder on the bottom flange face, the girder shall be rejected.

9. Defects and Repair Procedures:

a. After the forms are removed, stone pockets, honeycombs, or other defects may be exposed. The Engineer shall determine if these defects affect the item's structural integrity and whether the item will be rejected.

b. Precast or Precast/Prestressed Concrete Structural Units which have chipped, spalled, honeycombed, or otherwise defective areas which are not considered detrimental to the structural integrity may be used after being repaired by the Grooming and Repair Procedures for Precast Concrete Products in the NDR Materials Sampling Guide.

This document was originally approved and sealed on November 1, 2012 by Thomas A. Leikam, a licensed professional engineer in the State of Nebraska E-6290. This media should not be considered a certified document.

10. Surface Finish:

a. On structures serving as highway grade separations, the following shall apply:

(1) The exterior face of all exterior girders or beams plus the bottoms and chamfers on all lower flanges shall be given the following finish:

(i) All uneven form joints in excess of 1/8 inch (3 mm) shall be ground smooth.
(ii) The surface shall be steel brushed to remove scale, laitance, and to open partially obstructed holes.
(iii) The surface shall be dampened.
(iv) Grout shall be applied to the surface.
(v) The grout shall consist of 1.5 parts of fine sand, 1 part of Portland cement, and sufficient water to produce a consistency of thick paint. The cement used in the grout shall be a blend of regular Type I and white Portland cement to duplicate the lighter appearance of the steam cured units.
(vi) If necessary, an admixture which will not discolor the concrete may be used in the grout to reduce shrinkage if approved by the Engineer. Admixtures containing iron particles shall not be used.
(vii) The surface shall be float finished with a cork or other suitable float. This operation shall completely fill all holes and depressions on the surface.
(viii) When the grout is of such plasticity that it will not be pulled from holes or depressions, sponge rubber or burlap shall be used to remove all excess grout.
(ix) Surface finishing during cold weather shall not be performed unless the temperature is 40°F (4°C) and rising. The surface shall be protected against temperature drops below 40°F (4°C) for a period of 12 hours after finishing.
(x) A uniform appearance will be required. In the event the appearance produced by the above procedure is not uniform, both in texture and coloration, the Precast or Precast/Prestress Structural Unit will be rejected. The Contractor may request other methods approved by the Engineer to create a uniform appearance.

11. Grouting for Post-Tensioned Units:

a. The Contractor shall install steel in flexible or other approved tubes which shall be cast in the concrete and shall be pressure-grouted after the post-tensioning process has been completed.

b. Bonding grout shall be made to the consistency of thick paint and shall be mixed in the proportions as follows: Portland cement (Type I), 100 pounds (45 kg); fly ash (ASTM C 618), 34 pounds (15 kg); water, 45 to 62 pounds (20 to 28 kg) (adjust at site); and nonshrink admixture approved by the PCC Engineer.

c. The final grouting pressure shall be at least 80 psi (550 kPa).

This document was originally approved and sealed on November 1, 2012 by Thomas A. Leikam, a licensed professional engineer in the State of Nebraska E-6290. This media should not be considered a certified document.

d. The Contractor shall make provisions to demonstrate to the Engineer that grouting material has completely filled all areas within the conduit.

12. Handling, Transporting, and Storing:

a. (1) Prestressed Concrete Structural Units must be at least 9 days old before they can be set on the bridge substructure. Surveying for shim shots, forming the bridge deck or diaphragms and placing construction material on the girder is not allowed until the girders have attained the minimum age and design strength specified in the plans.

(2) The Contractor shall be responsible for exercising extreme care in lifting, handling, storing and transporting the Prestressed Concrete Structural Units to prevent cracking or damage. Prestressed concrete bridge girders shall be maintained in an upright position and supported within 18 inches of the ends at all times. When supported at the proper positions, no part of the units shall be allowed to rest on the ground. Prestressed concrete bridge girders shall be set on a level area to prevent field bowing and adequate supports shall be placed under their bearing devices to prevent settlement into the ground. Proper support bearings shall be used to avoid twisting of the prestressed concrete bridge girders. Prestressed Concrete Structural Units shall be lifted by devices designed by the Contractor.

(3) The Contractor must provide any temporary intermediate diaphragms and/or bracing necessary to provide lateral and torsional stability for the girders during construction of the concrete slab. The temporary intermediate diaphragms/bracing shall be removed after the concrete has attained its design strength. The cost of furnishing, installing and removing the temporary intermediate diaphragms and/or bracing shall be subsidiary to the pay item "Class 47BD-4000 Concrete for Bridges".

(4) (i) The girders shall be transported in an upright position and the points of support and direction of the reactions with respect to the girder shall be approximately the same during the transportation and storage as when the girder is in its final position. If the Contractor finds it necessary to transport the precast girders in some other position, the Contractor shall be prepared to prove that no internal damage results.

(ii) Adequate padding shall be provided between tie chains and cables to prevent chipping of the concrete.

(iii) Live loads shall not be allowed on the superstructure units until the floor slab is placed and attains the design strength shown in the plans.

13. Inspection Facilities:

The Contractor shall arrange with the producer of Precast or Precast/Prestressed Concrete Structural Units to provide an office, laboratory and bathroom for the Department's inspector. The areas shall meet the following requirements:

This document was originally approved and sealed on November 1, 2012 by Thomas A. Leikam, a licensed professional engineer in the State of Nebraska E-6290. This media should not be considered a certified document.

a. Thermostatically controlled heating and air conditioning shall be provided so that temperature can be maintained between 68° and 77°F (20° and 25°C).

b. The floors shall be tile or a similar floor covering.

c. Interior and exterior walls shall be well maintained and painted.

d. All exterior doors shall have cylinder locks, and all keys shall be turned over to the Engineer.

e. Ceiling lighting shall provide a minimum of 465 foot-candles (5000 lx) of light on all working surfaces.

f. Electrical outlets shall be spaced no more than 6 feet (1.8 m) apart with no less than 1 outlet on any wall of the office or lab.

g. A single trunk telephone and a means to the Internet with a minimum of 1.5 mb of download stream shall be installed in the office, and the installation charges shall be paid by the Contractor. The monthly service charges will be paid by the Department.

h. A fire extinguisher and First-Aid kit shall be provided.

i. A ventilated bathroom with a toilet and sink shall be provided in the structure. A fresh water supply and drain will be required in the lab area.

j. The lab, office, and bathroom shall be separate rooms with interconnecting doors.

k. The minimum lab area is 230 square feet (21 m^2).

l. The minimum toilet area is 20 square feet (2 m^2).

m. The minimum office area is 160 square feet (15 m^2).

n. The Contractor shall clean and maintain the rooms and shall supply all heating fuel, electricity, and water.

o. The Contractor shall also supply for the sole use of the inspectors all desks, work tables, chairs, files, lockers, and sanitary supplies necessary and commensurate with the inspection of his/her plant. It is anticipated that the following minimum amount of office and lab equipment will be required: One desk with approximately 3 foot x 6 foot (0.9 m x 1.8 m) top; one upright locker or wardrobe, with shelves, approximately 5 feet (1.5 m) deep; two 4-drawer file cabinets; 1 chair per inspector; 10 square feet (1 m^2) of work surface per inspector in the office area; and a lab counter (approximately 3 x 18 feet [0.9 m x 5.5 m]) with storage space beneath.

This document was originally approved and sealed on November 1, 2012 by Thomas A. Leikam, a licensed professional engineer in the State of Nebraska E-6290. This media should not be considered a certified document.

Method of Measurement

1. Precast or Precast/Prestressed Concrete piles shall be measured in accordance with the requirements of Section 703.

2. Precast or Precast/Prestressed Concrete superstructures will be measured for payment by the lump sum.

3. Post Tensioned Precast/Prestressed Concrete superstructures will be measured for payment by the lump sum and shall include all work associated with the post tensioning at the superstructure.

Basis of Payment

1. Prestressed and/or Precast Concrete piles shall be measured and paid for as prescribed in Section 703.

2.

Pay Item	**Pay Unit**
Precast/Prestressed Concrete _____ Superstructure at Station _____*	Lump Sum (LS)

* Reinforcing steel, prestressing tendons, and all other components of the Precast or Precast/Prestressed Concrete superstructure are subsidiary to this pay item.

3.

Pay Item	**Pay Unit**
Precast/Prestressed, Post Tensioned Concrete _____ Superstructure at Station _____*	Lump Sum (LS)

* Reinforcing steel, prestressing tendons, post tensioning tendons, ducts and all other components of the Precast or Precast/Prestressed, Post Tensioned Concrete superstructure are subsidiary to this pay item.

4. The cost of furnishing and maintaining the inspection facilities will not be paid for directly, but shall be subsidiary to "Precast/Prestressed, Post Tensioned Concrete _____ Superstructure at Station _____".

5. If a Precast or Precast/Prestressed, Post Tensioned Structural item's 56-day compressive strength is less than the design strength, then the Engineer will determine if the item can be used. If the item is to be used, a payment deduction of 25% will be taken if the 56-day compressive strength is less than 95 percent of the design strength.

6. All equipment calibrations and tests are subsidiary to "Precast/Prestressed, Post Tensioned Concrete _____ Superstructure at Station _____".

7. Payment is considered full compensation for all work prescribed in this Section, including the cost of prestressing, precasting and post tensioning of the bridge superstructure.

This document was originally approved and sealed on November 1, 2012 by Thomas A. Leikam, a licensed professional engineer in the State of Nebraska E-6290. This media should not be considered a certified document.

EXPANSION BEARINGS, TFE TYPE

Paragraph 2.a. of Subsection 712.02 of the Standard Specifications is void and superseded by the following:

2. Expansion Bearings, TFE Type:

   a. (1) The upper assembly shall consist of a sole plate conforming to the requirements of ASTM A709/A709M grade 50W (345W) weathering steel with an ASTM A240/A240M Type 304 stainless steel plate (13 gage) attached to the lower surface. As an alternate, the sole plate may be grade 36 (250) steel, metallized. If the grade 36 alternate is used, all flame cut edges of the sole plate shall be ground to reduce hardness and facilitate blast cleaning. All corners of the sole plate shall be rounded to a 1/16 inch (1.5 mm) radius. All exposed plain steel surfaces shall be blast cleaned to a near white finish and zinc metallized with a minimum thickness of 8 mils (200 mm). Zinc metallizing must be performed in accordance with the American Welding Specification AWS C2.2.

ANCHORS TO BE INSTALLED AT BRIDGE RAILS

As part of the construction of the bridge, the Contractor shall be required to install anchors or embedments furnished by the Aesthetic Contractor at the concrete bridge rails. Final design of these anchors and embedments has not been completed at this time and will be prepared by the selected Aesthetic Design Contractor for the project. The Aesthetic Design Contractor shall prepare and furnish the Contractor shop plans and detailed installation drawings showing the locations of all anchorages and embedments to be installed at the bridge.

The plans show details of typical anchors that may be used for attachment of the proposed portal frames, end posts for the fencing, lower anchors at the fence posts and anchors for the seat brackets at the portals along with an estimated number of each. The Contractor shall review the details shown for these anchors and take this into consideration when preparing their bid for the project. Installation of the anchors may affect the forming required to construct the concrete rails along the bridge and all costs associated with installation of the anchor assemblies shall be included in the contract bid price per anchor installation.

The final design of the anchors may vary from the details shown. If significant changes occur in the anchorage designs that may affect bridge forming and/or other construction costs, and which can be substantiated by the Contractor to the satisfaction of the JPA, than the changed anchor assemblies may be considered as the basis for additional compensation.

Payment will be made for installation of the different type of anchor assemblies as shown on the plans per each in accordance with the contract unit price bid for the items "Portal Frame Mounting Anchors", "End Post Anchors", "Fence Lower Cable Anchors" and "Seat Bracket Anchors". Said payment shall be full compensation for installation of the anchorages based upon the final design and shop plans provided by the Aesthetic Contractor.

This document was originally approved and sealed on November 1, 2012 by Thomas A. Leikam, a licensed professional engineer in the State of Nebraska E-6290. This media should not be considered a certified document.

2-INCH and 3-INCH CONDUITS IN BRIDGE

Description
This work will consist of furnishing and installing the 2-inch and 3-inch conduits to be cast into the bridge curbs to provide a complete electrical conduit system and other accessories as shown in the plans for the future bridge lighting and power for the aesthetic features to be installed by others. The electrical conduit system will include all conduit, junction boxes, expansion fittings, sweeps, drains, liquid-tight flexible conduit, couplings, hanger assemblies, inserts, sleeves and all other miscellaneous conduit hardware as shown on the plans. This work will also include all equipment, tools, labor, excavation, backfill, materials, and incidentals necessary to complete the work. The conduit systems shall use Schedule 40 PVC conduit.

Material Requirements
Junction boxes for use in bridge conduit systems shall be 10" x 6" x 6" in dimension and of NEMA type 4 watertight and dust-tight construction. Boxes shall be of machine able quality gray iron castings, outside flanged with recessed cover and designed especially for flush mounting in masonry. Cover and box shall have a hot-dip galvanized finish. Cover shall be gasket and secured to the box with hex head stainless steel screws. Conduit entrance into the box shall be through slip holes. Fasten conduit to box using sealing type locknuts. Provide O-Z Gedney box YR 100606, Spring City box ER 100606, Crouse Hinds box WGB 100606 or approved equal.

All rigid steel conduits shall be galvanized. All fittings used with galvanized rigid steel conduit shall be galvanized, malleable iron or steel, neither aluminum nor zinc alloy fittings are acceptable. All PVC conduits shall be Schedule 40 PVC. All conduit sweeps shall be 90-degree standard sweeps and shall be used at all changes in direction for the conduits in the pier.

Construction Methods
The conduit installation must be performed by or under the direct supervision of a competent Journeyman Electrician and/or Alltel Representative and conform to the requirements of the National Electric code and the NDOR Standard Specifications. Electrical conduit bends, elbows, and offsets must be accurately formed.

Conduit drains with a 1-inch projection from the concrete face, must be provided at each junction box and at low spots in the electrical conduit. Conduit in bridge piers shall be installed so that the conduit drains out from the pier to the pull box and so that water cannot accumulate within the conduit inside of the bridge pier.

Expansion fittings shall be of the type and size shown on the plans, and shall be installed with conduit positioned with respect to ambient temperature. All conduit expansion fittings shall bear the U.L. label.

The Contractor shall provide pull ropes in all conduits as required by the appropriate utility company to facilitate placement of future cables. The Contractor shall coordinate with the affected utilities during installation of the conduits to ensure compatibility with all proposed underground relocation work at each end of the bridge that is to be completed by the individual utilities and that is not included in the contract.

This document was originally approved and sealed on November 1, 2012 by Thomas A. Leikam, a licensed professional engineer in the State of Nebraska E-6290. This media should not be considered a certified document.

The Contractor shall not proceed with any pavement construction at the approach roadway or bridge approach slabs until all conduits have been placed and connected to the conduit system that will be located across the bridge.

Method of Measurement and Payment
The electrical conduit system will be measured for payment by the number of feet shown in the plans within the limits defined for the system. All ¾" conduit, junction boxes, fittings, sweeps or bends, expansion fittings, drains, ground rods, bolts, anchor bolt assemblies, hanger assemblies, inserts, sleeves and other incidental items shall not be paid for directly but shall be considered subsidiary to the pay item "___" Conduit In Bridge".

4" DIAMETER CONDUIT IN BRIDGE (UNDERBRIDGE COMMUNICATIONS CONDUITS)

Description
This work will consist of furnishing and installing a complete underbridge communications conduit system with anchoring system as shown in the plans at the bridge structure for the City of Lincoln communications conduits. The anchoring system assembly will include nuts, washers, threaded rods, fiberglass flatbars and miscellaneous hardware. The communications conduit system will include all conduit, expansion fittings, couplings/joinings, epoxy adhesive, hanger assemblies and all other miscellaneous conduit hardware. This work will also include all equipment, tools, labor, materials, and incidentals necessary to complete the work. The underbridge communications conduit system shall use CHAMPION fiberglass conduit (otherwise referred to as reinforced thermosetting resin conduit), or approved equal. The conduit shall be third party tested.

Material Requirements
All fiberglass conduit and fittings shall have a temperature range of -60°F to +250°F. The conduit shall be designed for aboveground installation and GRAY in color on the structure and shall be designed for underground installation north of Abutment 1 to the Fiberglass Vault at Station 17+18.00, 17' Lt. The wall thickness should be extra heavy wall to provide the highest level of physical protection.

The conduit hanger support system shall consist of clevis type hangers designed for use with four 4-inch conduit, with ½" hanger rods rated for a maximum load of 600 pounds.

To allow for natural expansion and contraction, expansion joints shall be installed in order to meet the requirement of NEC 2011 Article 355.44 Expansion Fittings. Expansion joints shall be designed for four (4) inch conduit and consist of a single expansion joint socket. The location of the expansion joints shall meet the requirements of the National Electric Code (NEC) and as directed by the manufacturer.

The jointing between individual segments of conduit shall completed using an interference joint system consisting of an integral bell and spigot. The spigot end shall have a buttress type, male thread for easy installation. The belled end shall contain the mating female threads. Epoxy adhesive shall be the CHAMPION MIX system two part adhesive, epoxy resin system, or approved equal.

This document was originally approved and sealed on November 1, 2012 by Thomas A. Leikam, a licensed professional engineer in the State of Nebraska E-6290. This media should not be considered a certified document.

The anchoring system assembly will consist of a trapeze hanging system using threaded rods that are attached to the bridge. The horizontal components are fiberglass flatbars, 2-inch wide x ½" thick, and the threaded rods shall be sleeved over using 1-inch fiberglass pultruded pipe, in order not to abrade the conduit.

Construction Methods
The conduit installation must be performed by, or under the direct supervision of, a competent Journeyman Electrician and conform to the requirements of the National Electric Code.

The conduit hanger support system shall have a maximum spacing of twelve (12) feet between hangers or as required to avoid a mid-span deflection exceeding 5/8 inches. Intermediate anchor hangers shall be placed at the midpoint between expansion joints and installed per conduit manufacturer's recommendations.

The maximum distance from the abutment to the first expansion joint shall not exceed 100 feet and then shall be spaced equally at intervals no greater than 200 feet. All conduit expansion fittings shall bear the U.L. label.

Epoxy adhesive shall be applied to the spigot end of the conduit to create a tight lock joint designed to provide water tightness and increase pull out strength.

The Contractor shall provide pull ropes in all conduits to facilitate placement of future cables.

Plan Submittal
The Contractor shall submit plans for the installation, jointing, expansion joint and anchor point location, hangar type and spacing, and diaphragm sleeves for approval by the engineer three weeks prior to commencement any work related to the installation of the 4" Conduit in Bridge.

Method of Measurement and Payment
The communication conduit system will be measured for payment by the number of feet shown in the plans within the limits defined for the system. All 4" conduit, fittings, expansion fittings, bolts, anchor bolt assemblies, hanger assemblies, inserts, sleeves and other incidental items shall not be paid for directly but shall be considered subsidiary to the pay item "4" Conduit in Bridge".

CONCRETE CONSTRUCTION

Section 704 in the Standard Specifications is amended to include the following:

> All concrete rails on bridges and approach slabs shall be cast-in-place. Slip-forming will not be permitted for concrete rails on bridges and approach slabs.

Paragraph 8. of Subsection 704.03 is amended to provide that forms for 42 inch bridge rails shall be made of steel.

The fourth subparagraph of Paragraph 8.j. of Subsection 704.03 is void and superseded by the following:

> Steel stay-in-place form material shall conform to the requirements of ASTM A 653/A 653M Coating Designation G165/Z500.

This document was originally approved and sealed on November 1, 2012 by Thomas A. Leikam, a licensed professional engineer in the State of Nebraska E-6290. This media should not be considered a certified document.

Paragraphs 8. a. b. and c. of Subsection 704.05 are void and superseded by the following:

8. Payment Deductions:

a. The 28-day compressive strength is determined by the average strength of all cylinders made on a specific day to determine the 28-day compressive strength of all of a group's class of concrete poured that day. Concrete with a 28-day compressive strength not meeting the design compressive strength is subject to removal.

b. If the 28-day compressive strength is less than the design compressive strength, cores may be taken within 45 days after the concrete was poured. The average of the cores will be used to determine the compressive strength. If the average of the cores is equal to or greater than 85% of the design compressive strength, the concrete is acceptable for use and is not subject to removal or a pay reduction. Cores will be taken by the Department at no cost to the Contractor.

c. If either the 28-day compressive strength or the average core strength is less than the design strength and the Engineer determines that the concrete is acceptable for use, the concrete is subject to a payment deduction. The pay deduction is shown below:

$$\frac{2 \times (\text{Design Compressive Strength} - \text{28-day Compressive Strength})}{\text{Design Compressive Strength}} = \textit{Percent Reduction}$$

Or

$$\frac{2 \times (\text{Design Compressive Strength} - \text{Average Core Compressive Strength})}{\text{Design Compressive Strength}} = \textit{Percent Reduction}$$

PORTLAND CEMENT CONCRETE

Paragraph 1. of Subsection 1002.02 in the Standard Specifications is amended to include the following:

b. Concrete mixes will be in accordance of Table 1002.02.

Paragraph 3. of Subsection 1002.02 is void and superseded by the following:

3. Type 1PF and 1PN cement shall be used for all classes of concrete except for pavement repair. Pavement repair shall include Type I/II Portland cement for Class PR1 concrete and Type III Portland cement shall be used in Class PR3 concrete. Type 1P cement shall meet all requirements of ASTM C 595.

Tables 1002.02, 1002.02M and 1002.03 in Subsection 1002.02 are void and superseded by the following:

This document was originally approved and sealed on November 1, 2012 by Thomas A. Leikam, a licensed professional engineer in the State of Nebraska E-6290. This media should not be considered a certified document.

Testing Agency Name Olsson Associates

PROPOSAL FORM

Materials Testing and Special Inspection

RFP Special Inspections for Pedestrian Bridge

1-REINFORCED CONCRETE TESTING		Estimated Amount			
		Qty.	Unit	Rate	Amount
1	ACI Technician and Observation Labor - includes testing of one composite sample for fluid slump, air entrainment, and temperature and cast one set of 6 cylinders for each composite sample (paid per set).	96	Set	$85.00	$8,160.00
2	ICC Reinforcing Concrete Field Inspector - Observation of reinforcing steel/ tension cables prior to concrete placment. Includes reviewing minimum bend radii per the Special Provisions.	120	Hour	$47.00	$5,640.00
3	Post-tensioning Inspector - Observation and documentation of all tensioning operations	60	Hour	$47.00	$2,820.00
4	Reinforcing steel test	18	Each	$105.00	$1,890.00
5	Post-tensioning steel strand test	6	Each	$70.00	$420.00
6	Compressive Strength - Concrete (each tests)	357	Each	$13.00	$4,641.00
7	Reserve Concrete Specimen - Storage (2 Cylinders/Set)	192	Each	$5.00	$960.00
8	Moisture Test - Aggregate	12	Each	$10.00	$120.00
9	Gradation Test - Fine Aggregate	12	Each	$75.00	$900.00
10	Gradation Test - Course Aggregate	12	Each	$75.00	$900.00
11	Trip Charge - (Includes Mileage/Truck Usage , Round Trip- No Labor)	200	Each	$7.50	$1,500.00
	TOTAL				$27,951.00

2- BRIDGE MATERIAL SAMPLING & TESTING		Estimated Amount			
		Qty.	Unit	Rate	Amount
1	Bridge Materials Inspector - Includes review of material certifications and other submittals as outlined in Section 6 "Bridge Material Sampling and Testing" in the Special Provisions.	200	Hour	$47.00	$9,400.00
2	Trip Charge - (Includes Mileage/Truck Usage , Round Trip- No Labor)	40	Each	$7.50	$300.00
	TOTAL				$9,700.00

3- PROJECT MANAGEMENT, COORDINATION, ADMININISTRATION & MEETINGS		Estimated Amount			
		Qty.	Unit	Rate	Amount
1	PM, Coord., Admin, Meetings & All Other Work Items	1	LS	$8,000.00	$8,000.00
	TOTAL				$8,000.00

4 - ADDITIONAL COSTS (Not listed above)		Estimated Amount			
		Qty.	Unit	Rate	Amount
1	Daily Structural Precast/Prestressed Concrete Plant Observations per Section 7 of the Special Provisions (Note concrete cylinder testing costs per Section 1 of this form)	100	Hour	$48.00	$4,800.00
2	Prestressing steel strand test	5	Each	$70.00	$350.00
3	Concrete Batch Plant inspections	80	Hour	$48.00	$3,840.00
4	Trip Charge for Precast Plant Observation - (Includes Mileage/Truck Usage , Round Trip- No Labor)	15	Each	$55.00	$825.00
5	Technician Overtime - Weekdays	80	Hour	$78.00	$6,240.00
6	Technician Overtime - Weekends	80	Hour	$78.00	$6,240.00
	NOTE: This proposal form shall include all costs associated with performing the requested scope of services outlined in the Special Provisions. Items which are not specifically identified in the above pay items but which are required to complete the specified work shall be considered subsidiary to the direct items for which payment is to be made. Additional compensation for subsidiary items of work that are required to provide the necessary testing services as outlined will not be considered.				
	TOTAL				$22,295.00

TOTAL of ALL SERVICES	$67,946.00

This Proposal is Submitted by: Olsson Associates

Contact Person Rick Hanny, CET, ICC, CWI

Contact Person Telephone Number 402.938.2485

Date: 1/11/2013

EXHIBIT A TO CONTRACT AGREEMENT

EXHIBIT B

Intentionally Omitted

EXHIBIT C

Construction and Maintenance Agreement
Between BNSF and the City of Lincoln

Approved by Law
1-15-2013

A- 86070

CONSTRUCTION AND MAINTENANCE AGREEMENT

THIS CONSTRUCTION AND MAINTENANCE AGREEMENT ("**C&M Agreement**") is made to be *effective the 18th day of October, 2010* ("***Effective Date***"), *by and between* **BNSF RAILWAY COMPANY**, a Delaware corporation ("**BNSF**"), and the **CITY OF LINCOLN, NEBRASKA**, a Nebraska municipal corporation ("**City**"). City and BNSF, respectively, are sometimes referred to in this C&M Agreement each as a "**Party**" and collectively, as the "**Parties**".

RECITALS

A. BNSF owns and operates a line of railroad in and through the City of Lincoln, State of Nebraska

B In an effort to strengthen the long-term economic and physical viability of the West Haymarket District and Downtown Lincoln, City plans to construct entertainment, recreation, lodging, offices, retail and/or other complementary and/or supporting facilities (collectively, the "**West Haymarket Project**") in the area shown on the map attached hereto as **Exhibit A** and incorporated herein by reference ("**Project Area**") The West Haymarket Project will include, among other things, an approximately 16,000-seat arena (the "**Arena**"), an ice center facility (the "**Ice Center**"), a district energy facility, and upgrades to parking, utilities, and surface transportation access to the area.

C. City and BNSF have entered into that certain Master Development Agreement of even date *herewith (the "**Master Agreement**"). In connection with certain economic development objectives of City* as set forth in the Master Agreement, City desires that BNSF grant certain permanent or temporary license and/or easement rights to City and certain third parties (each a "**Right of Entry**" and, in multiples, "**Rights of Entry**") for certain activities on BNSF's Property (defined below) (each a "**Right of Entry Work**" and collectively, "**Rights of Entry Work**"). For the purposes of this C&M Agreement, the term "BNSF's Property" shall mean the applicable Existing BNSF Property, Retained BNSF Property, and/or Replacement BNSF Property which is under BNSF ownership at the time work is done under the Right of Entry. All capitalized terms not defined herein shall have the same meaning as in the Master Agreement.

AGREEMENTS

NOW, THEREFORE, in consideration of the mutual covenants and agreements of the Parties contained herein, the receipt and sufficiency of which are hereby acknowledged, the Parties agree as follows.

ARTICLE I – CITY C&M WORK. The provisions of this C&M Agreement, in addition to and not in limitation of the provisions contained in the applicable Rights of Entry, shall apply with respect to the Rights of Entry Work and any other construction, maintenance, Operation (as defined in the Master Agreement), or other work being performed on or adjacent to BNSF property by or for City (collectively, the "**City C&M Work**"). In the event of conflicts between the terms of this C&M Agreement and any applicable Right of Entry agreement, the most restrictive provisions shall apply to City.

ARTICLE II – BNSF OBLIGATIONS. In consideration of the covenants of City set forth herein and the faithful performance thereof, BNSF agrees to do the following:

2.1 Grant to City the following temporary Rights of Entry in accordance with and as described in Section 3.2 of the Master Agreement:

2.1.1 The Temporary Access License for Initial Construction as defined and described in Section 3.2.1 of the Master Agreement and attached thereto as Exhibit EE;

2.1.2 The Temporary Grading License for Storm Water Mitigation as defined and described in Section 3.2.2(a) of the Master Agreement and attached thereto as Exhibit FF-1;

2.1.3 The Temporary Access License for Soil Staging as defined and described in Section 3.2.3 of the Master Agreement and attached thereto as Exhibit GG;

2.1.4 The Temporary Access License for Construction Staging - Pedestrian Bridge as defined and described in Section 3.2.4(a) of the Master Agreement and attached thereto as Exhibit HH-1;

2.1.5 The Temporary Access License for Amtrak Work as defined and described in Section 3.2.5 of the Master Agreement and attached thereto as Exhibit II;

2.1.6 The Temporary Grading License for Arena Drive and Parking Lot Construction as defined and described in Section 3.2.9 of the Master Agreement and attached thereto as Exhibit KK;

2.1.7 The Temporary Access License for Survey / Geotech / Environmental Activities as defined and described in Section 3.2.11(a) of the Master Agreement and attached thereto as Exhibit BB;

2.1.8 The Crossing Agreements as defined and described in Section 3.2.12 of the Master Agreement and attached thereto as Exhibit UU.

2.1.9 The Temporary Construction and Access License for Sanitary Sewer Work as defined and described in Section 3.2.11(b) of the Master Agreement and attached thereto as Exhibit BB-1.

2.2 Grant to City the following permanent Rights of Entry in accordance with and as described in Section 3.2 of the Master Agreement:

2.2.1 The Storm Water Mitigation Easement as defined and described in Section 3.2.2(b) of the Master Agreement and attached thereto as Exhibit FF;

2.2.2 The Pedestrian Bridge Easement as defined and described in Section 3.2.4(b) of the Master Agreement and attached thereto as Exhibit HH; and

2.2.3 The City Utility Easements as defined and described in Section 3.2.7 of the Master Agreement and attached thereto as Exhibit TT and Exhibit TT-1.

2.2.4 The 2nd & J Utility Easement as defined and described in Section 3.2.10 of the Master Agreement and attached thereto as Exhibit TT.

2.3 Grant to City the Security Fencing License in accordance with and as defined and described in Section 3.2.8 of the Master Agreement and attached thereto as Exhibit JJ.

ARTICLE III – CITY OBLIGATIONS

3.1 Plans.

3.1.1 If any City C&M Work is not included in the City Work Final Design (as defined in the Master Agreement), City must furnish to BNSF four sets of plans and specifications for such City C&M Work (reduced size 11" x 17"), together with two copies of calculations, and two copies of specifications in **English Units**, for approval prior to commencement of any construction. For each set of such plans and specifications submitted by City to BNSF, BNSF shall approve or reject such plans and specifications within thirty (30) days after BNSF's receipt thereof and, if rejected, the reasons for such rejection shall be set forth in reasonable detail. Corrected plans and specifications shall be approved or rejected in the manner hereinbefore provided. BNSF will give City final written approval of the plans and specifications substantially in the form of **Exhibit B**, attached hereto and incorporated herein by reference. Upon BNSF's final written approval of the plans and specifications (the "**Approved Plans**"), the Approved Plans will

become part of this C&M Agreement and incorporated herein. Any approval of the Approved Plans by BNSF shall in no way obligate BNSF in any manner with respect to the finished product design and/or construction. Any approval by BNSF shall mean only that the Approved Plans meet the subjective standards of BNSF, and such approval by BNSF shall not be deemed to mean that the Approved Plans or construction is structurally sound and appropriate or that the Approved Plans meet applicable regulations, laws, statutes or local ordinances and/or building codes.

3.1.2 City must provide for and maintain minimum vertical and horizontal clearances, as required in the Contractor Requirements in **Exhibit C**, attached hereto and incorporated herein by reference, and as approved by BNSF as part of the City Work Final Design or any other Approved Plans.

3.1.3 Prior to the start of any segment of City C&M Work on or affecting BNSF's property, City must provide to BNSF, and BNSF must approve, exact minimum vertical and horizontal clearances for such segment of City C&M Work being constructed pursuant to the City Work Final Design. Upon BNSF's approval of each segment of City C&M Work, BNSF and City agree to execute an amendment to this C&M Agreement incorporating the approved clearances into this C&M Agreement as **Exhibit D** ("**Final Clearances**"). City shall not deviate from the Final Clearances for the applicable segment of City C&M Work without the prior written approval of BNSF.

3.1.4 City or its contractor(s) must submit four (4) copies of any plans (including two sets of calculations in **English Units**) for proposed shoring, falsework or cribbing to be used over, under, or adjacent to BNSF's tracks to BNSF's Project Engineer (defined below) for approval. The shoring, falsework or cribbing used by City Contractors (defined below) shall comply with all applicable requirements *promulgated by state and federal agencies, departments, commissions and other legislative bodies.*

3.1.5 (a) For purposes of notices required under this C&M to be made to BNSF's Project Engineer, Division Engineer, Manager Signal, and Director Engineering Services, the following contact information is in effect at the Effective Date:

(i) BNSF's "**Project Engineer**" is:

Gerald Maczuga
Gerald.Maczuga@BNSF.com
402-458-7537 (office)
206-265-2427 (cell)
402-458-4376 (fax)

(ii) BNSF's "**Division Engineer**" is:

Andrew Shearer
Andrew.Shearer@BNSF.com
402-458-7724 (office)

(iii) BNSF's "**Manager Signal**" is:

Mike Koetter
Michael.Koetter@BNSF.com
402-458-7504 (office)
402-458-7590 (fax)

(iv) BNSF's "***Director Engineering Services***" is:

Tom Schmidt
Thomas.Schmidt@BNSF.com
913-551-4330 (office)

(b) The contact information in **Section 3.1.5(a)** may be changed from time to time in accordance with the notice provisions of **Section 4.6** below.

3.2 Additional City Requirements.

3.2.1 City must supervise and inspect the operations of all City Contractors to assure compliance with the City Work Final Design and all other Approved Plans, the terms of this C&M Agreement and all communicated and applicable safety requirements of BNSF.

3.2.2 City must make any required applications and obtain all required permits and approvals for the City C&M Work.

3.2.3 City must acquire all rights of way necessary for the City C&M Work.

3.2.4 City must furnish all labor, materials, tools and equipment for the performance of the City C&M Work.

3.2.5 City must advise BNSF's Project Engineer in writing of: (i) the completion date of each Right of Entry Work within thirty (30) days after each such completion date and (ii) the date on which City and/or City Contractor will meet with BNSF for the purpose of making final inspection of each Right of Entry Work.

3.2.6 City must notify and obtain prior authorization from BNSF's Project Engineer before entering BNSF's right-of-way for inspection, construction, maintenance, or any other purposes. Prior to performing any inspection, construction or maintenance with its own personnel, City shall: comply with all of BNSF's communicated and applicable safety rules and regulations; require any City employee performing maintenance to complete the safety training program at the Website "contractororientation.com"; notify BNSF when, pursuant to the requirements of **Exhibit C** or **Section 3.3.6** below, flaggers are required to be present; and procure, and have approved by BNSF's Risk Management Department, Railroad Protective Liability insurance.

3.2.7 City agrees to reimburse BNSF for work of an emergency nature caused by City or City Contractors in connection with the City C&M Work which BNSF deems is reasonably necessary for the immediate restoration of railroad operations, or for the protection of persons or BNSF property. Such emergency work may be performed by BNSF without prior approval of City and City agrees to fully reimburse BNSF for all such work.

3.2.8 The City C&M Work must be performed by City or City Contractors in a manner that will not endanger or interfere with the safe and timely operations of BNSF and its facilities.

3.2.9 City must include the following provisions in any contract with City Contractors:

3.2.9.1 City Contractor is placed on notice that fiber optic, communication and other cable lines and systems (collectively, the "**Lines**") owned by various telecommunications companies may be buried on BNSF's property or right-of-way. The locations of these Lines have been included on the plans based on information from the telecommunications companies. City Contractor will be responsible for contacting BNSF's Project Engineer, BNSF's Manager Signal, and the telecommunications companies and notifying them of any work that may damage these Lines or facilities and/or interfere with their service. City Contractor must also mark all Lines shown on the plans or marked in the field in order to verify their locations. City Contractor must also use all reasonable methods when working in the BNSF right-of-way or on BNSF property to determine if any other Lines (fiber optic, cable, communication or otherwise) may exist.

3.2.9.2 City Contractor will be responsible for the rearrangement of any facilities or Lines determined to interfere with the City C&M Work. City Contractor must cooperate fully with any telecommunications company(ies) in performing such rearrangements.

3.2.9.3 Failure to mark or identify these Lines will be sufficient cause for BNSF's Project Engineer to stop all or any part of the City C&M Work at no cost to City or BNSF until these items are completed.

3.2.9.4 All City C&M Work performed within the limits of BNSF's right-of-way must be performed in a good and workmanlike manner in accordance with plans and specifications approved by BNSF.

3.2.9.5 Changes or modifications during the City C&M Work that affect safety or BNSF operations must be subject to BNSF's approval.

3.2.9.6 No work will be commenced within BNSF's right-of-way until each of the prime contractors employed in connection with the City C&M Work have (i) executed and delivered to BNSF a letter agreement in the form of **Exhibit C-1(A)** attached hereto and incorporated herein by reference, and (ii) delivered to and secured BNSF's approval of the required insurance.

3.2.9.7 Notwithstanding the provisions of **Section 3.2.9.6** above, solely for the temporary Rights of Entry described in **Sections 2.1.1**, **2.1.3**, **2.1.4**, and **2.1.5** above, no work will be commenced within BNSF's right-of-way until each of the prime contractors employed in connection with the City C&M Work under the referenced temporary Rights of Entry have (i) executed and delivered to BNSF a letter agreement in the form of **Exhibit C-1(B)** attached hereto and incorporated herein by reference, and (ii) delivered to and secured BNSF's approval of the required insurance.

3.2.9.8 To facilitate scheduling for the City C&M Work, City Contractors shall give BNSF's Project Engineer eight (8) weeks' advance notice of the proposed times and dates for work windows, except in case of emergency, in which event City Contractors must notify BNSF's Project Engineer by telephone at (402) 458-7537 as soon as practicable and shall promptly thereafter follow up with written notice to BNSF's Project Engineer at City Contractor's earliest opportunity. Notwithstanding the foregoing, in no event shall City or any City Contractors enter onto BNSF's property prior to receiving written approval for such entry from BNSF's Project Engineer. BNSF and the City Contractors will establish mutually agreeable work windows for the City C&M Work. BNSF has the right at any time to revise or change the work windows, due to train operations or service obligations. BNSF will not be responsible for any additional costs and expenses resulting from a change in work windows. Additional costs and expenses resulting from a change in work windows shall be accounted for in the contractor's expenses for the City C&M Work.

3.3 Construction and Contractor Requirements.

3.3.1 Contractor Requirements. For the City C&M Work, City must comply, and cause all of its contractors (each a "**City Contractor**", and collectively the "**City Contractors**") to comply, with the obligations set forth in **Exhibit C** attached hereto and incorporated herein by reference, and cause all City Contractor(s) for such work to execute and deliver a Contractor Right of Entry ("**CROE**") in the form of **Exhibit C-1(A)** or **Exhibit C-1(B)**, as applicable. In addition, all City C&M Work must comply with all of the following requirements:

3.3.2 Standards. All City C&M Work must performed (i) in a good and workmanlike manner, (ii) in accordance with the applicable City Work Final Design or other Approved Plans, (iii) in conformance with applicable building codes and all applicable engineering, safety and any and all laws, statutes, regulations, ordinances, orders, covenants, restrictions, or decisions of any court of competent jurisdiction ("**Legal Requirements**"), (iv) in accordance with the accepted industry standards of care, skill and diligence, and (v) in such a manner as shall not adversely affect the structural integrity or maintenance of any BNSF improvements or other improvements on or near BNSF property, or any lateral support of any structures adjacent to or in the proximity of any BNSF improvements or BNSF property. In addition, each

portion of the City C&M Work must be promptly commenced by the Party obligated hereunder to perform the same and thereafter diligently prosecuted to conclusion in its logical order and sequence. Furthermore, any changes or modifications of the City C&M Work which affect BNSF will be subject to BNSF's written approval prior to the commencement of any such changes or modifications from BNSF's Project Engineer.

3.3.3 Site Cleanup and Restoration. City shall be responsible for all job site cleanup and restoration, including removal of all construction materials, concrete debris, surplus soil, refuse, *contaminated soils, asphalt debris, litter and other waste materials resulting from the City C&M Work to the* reasonable satisfaction of BNSF's Division Engineer.

3.3.4 Safety/Security.

3.3.4.1 During the City C&M Work, City, at City's sole cost, shall perform all activities and work in such a manner as to preclude personal injury or property damage to BNSF or any other party, and shall ensure that there is no interference with the railroad operations or other activities of BNSF, or anyone present on BNSF's property with the authority or permission of BNSF. City shall not disturb any improvements of BNSF or BNSF's existing lessees, licensees, license beneficiaries or lien holders, if any, or interfere with the use of such improvements, except as permitted by **Section 3.3.5** below.

3.3.4.2 Prior to entering BNSF's property to perform the City C&M Work, City shall *cause all City Contractor(s) to comply with all of BNSF's communicated and applicable safety and security* rules and regulations and complete the safety training program at the Website "www.contractororientation.com" or then-current program designated by BNSF (the "**Safety Orientation**") and eRAILSAFE or then-current security program designated by BNSF (the "**Security Orientation**") within one year prior to entering upon BNSF's property. Additionally, City must ensure that each and every employee of all City Contractors possess a card certifying completion of the Safety Orientation and the Security Orientation prior to entering upon BNSF's property. City must renew the Safety Orientation and Security Orientation annually.

3.3.4.3 City must supervise and inspect the activities of all City Contractors entering onto BNSF's property to perform the City C&M Work, and assure compliance with the applicable Approved Plans, the terms of this C&M Agreement, and all communicated and applicable safety requirements of BNSF. BNSF will have the right to stop work if any of the following events take place: (i) If BNSF determines that proper supervision and inspection are not being performed by City at any time during the City C&M Work, (ii) any City Contractor performs any work in a manner contrary to the applicable Approved Plans; (iii) any City Contractor, in BNSF's opinion, prosecutes its work in a manner which is hazardous to BNSF property, facilities, personnel, or the safe and expeditious movement of railroad traffic; or (iv) the insurance described herein or in **Exhibit C-1(A)** or **Exhibit C-1(B)**, as applicable, is canceled or expires. The work stoppage will continue until all necessary actions are taken by City to rectify the situation to the satisfaction of BNSF's Division Engineer or until additional insurance has been delivered to and accepted by BNSF. Any such work stoppage under this provision will not give rise to any liability on the part of BNSF. BNSF's right to stop the work is in addition to any other rights BNSF may have under this C&M Agreement or an applicable Right of Entry. In the event that BNSF desires to stop work, BNSF agrees to immediately notify City. Notwithstanding the foregoing, BNSF has no duty or obligation to observe or inspect, or to halt work by any City Contractor on BNSF's property, it being solely City's responsibility to ensure that work performed by any City Contractor is conducted in compliance with *the terms of this C&M Agreement, all Legal Requirements and the applicable Approved Plans.*

3.3.5 Disturbance of Improvements. City will be responsible at no cost to BNSF to locate and make any adjustments necessary to any wire lines, pipe lines, or other utilities, fences, buildings, improvements or other facilities located within BNSF's property (collectively, "**Other Improvements**"). City must contact the owner(s) of the Other Improvements notifying them of any work that may damage these Other Improvements and/or interfere with their service and, if required, obtain the owner's written approval prior to so affecting the Other Improvements. City must mark all BNSF improvements and Other Improvements on the applicable Approved Plans and mark all BNSF improvements and Other Improvements in the field in order to verify their locations. City must also use all reasonable methods when working on or near BNSF's property to determine if any BNSF improvements or

Other Improvements (fiber optic, cable, communication or otherwise) may exist. Failure to mark or identify any BNSF improvements or Other Improvements will be sufficient cause for BNSF to stop construction at no cost to BNSF until such items are completed. City must make all adjustments and other work described in this **Section 3.3.5**, including without limitation adjustments to Other Improvements and work on and affecting BNSF property, in a manner that does not adversely impact utility service to BNSF. City shall use commercially reasonable efforts to cause, at its expense, any utilities for its operations to be separately metered from utilities serving BNSF's operations by the date set forth on the Timeline (as defined in the Master Agreement).

3.3.6 Flagging. Subject to modification in writing by BNSF's Division Engineer, no City Contractor shall conduct any activities on, or be present on, any portion of BNSF's property that is within twenty-five (25) feet of any active railroad track or where any such activities have the potential to foul any active railroad track, except in the presence of a flagger. In addition to and not in limitation of the foregoing, City shall, and shall cause its City Contractors to, comply with all BNSF requirements concerning flagging, including without limitation the provisions of Section 1.05 of **Exhibit C**. BNSF shall arrange for the presence of flaggers as soon as practicable after receipt of notice from City in accordance with Section 1.05.01 of **Exhibit C**; provided, however, BNSF shall not be held responsible for City delays when flaggers are not available.

3.3.7 Flagging Costs. Flagging costs of the Included BNSF Work (as defined in the Master Agreement) are the responsibility of BNSF to the extent described in Section 2.2(i) of the Master Agreement. All other flagging costs, including without limitation flagging costs for City C&M Work, BNSF Additional Cost Work and any other work that is or becomes a part of the West Haymarket Project, shall be at City's cost and expense; provided, however, to the extent BNSF is performing work requiring flagging that is the responsibility of BNSF (under the first sentence of this **Section 3.3.7**) at the same time and in the same location as the City C&M Work, BNSF Additional Cost Work and/or any other work that is or becomes a part of the West Haymarket Project, such flagging costs and expenses shall be deemed to be part of the Included BNSF Work. Notwithstanding the foregoing, however, if the City C&M Work, BNSF Additional Cost Work or any other work that is or becomes part of the West Haymarket Project is of such magnitude that additional flaggers or additional flagging time is required, then City shall be responsible for all flagging costs and expenses for such incremental flaggers and additional flagging time as BNSF Additional City Cost Work. As further described in Section 1.05.03c of **Exhibit C**, the governmental flagging rate in effect at the time of performance by the flaggers will be used to calculate flagging costs. As more particularly described in Section 2.7.2 of the Master Agreement and also in the Escrow Agreement (as defined in the Master Agreement), City shall deposit additional amounts, including amounts for estimated flagging costs, into escrow for BNSF Additional City Cost Work.

3.3.8 No Unauthorized Tests or Digging. No City Contractor shall conduct any tests, investigations or any other activity using mechanized equipment and/or machinery, or place or store any mechanized equipment, tools or other materials, within twenty-five (25) feet of the centerline of any railroad track on BNSF's property, except after City has obtained written approval from BNSF Director Engineering Services, and then only in strict accordance with the terms and any conditions of such approval.

3.3.9 Drainage. Any and all cuts and fills, excavations or embankments as part of the City C&M Work shall be deemed to be a part of the City C&M Work and shall be made by City in such manner, form and to the extent as will provide adequate drainage of and from BNSF's property and any adjoining BNSF right of way. Wherever any such fill or embankment shall or may obstruct the natural and pre-existing drainage from either or both BNSF's property and BNSF's adjoining right of way, City shall construct such culverts or drains to preserve such natural and pre-existing drainage, and such culverts or drains shall also be deemed to be a part of the City C&M Work. City shall wherever necessary with respect to the City C&M Work, construct extensions of existing drains, culverts or ditches through or along BNSF's property (which extensions will also be deemed to be a part of the City C&M Work), such extensions to be of adequate sectional dimensions to preserve flowage of drainage or other waters, and/or material and workmanship equally as good as those now existing.

3.3.10 Liens. City shall promptly pay and discharge any and all liens arising out of any construction done, suffered or permitted to be done by City. BNSF is hereby authorized to post any notices

or take any other action upon or with respect to BNSF's property that is or may be permitted by Legal Requirements to prevent the attachment of any such liens to any portion of BNSF's property; provided, however, that failure of BNSF to take any such action shall not relieve City of any obligation or liability under this Section or any other section of this C&M Agreement. City shall include in its contracts with all City Contractors, and require all contractors performing any work on BNSF's property or providing materials to include in their contracts with their subcontractors, a notice and acknowledgement by the party providing work or materials that BNSF is not liable for any amounts due such contractor or contractors and waiving any right to place a lien on BNSF's property.

3.4 Environmental Compliance and Notification.

3.4.1 Compliance with Environmental Laws. City shall cause its contractors and employees to strictly comply with all federal, state and local environmental laws and regulations in its use of BNSF's property, including, but not limited to, the Resource Conservation and Recovery Act, as amended (RCRA), the Clean Water Act, the Oil Pollution Act, the Hazardous Materials Transportation Act, CERCLA (collectively, the "**Environmental Laws**") with respect to the BNSF property. City and its contractors, if any, shall not maintain a "treatment," "storage," "transfer" or "disposal" facility, or "underground storage tank," as those terms are defined by Environmental Laws, on BNSF's property. City and its contractors, if any, shall not handle, transport, release or suffer the release of "hazardous waste" or "hazardous substances", as "hazardous waste" and "hazardous substances" may now or in the future be defined by any Environmental Laws, except as may be pre-existing in BNSF's property and as encountered in the City C&M Work and then only in compliance with Environmental Laws and the SMP (defined below), and shall not use any soils or other materials containing hazardous waste or hazardous substances in connection with the City C&M Work, or otherwise bring any hazardous waste or hazardous substances onto any BNSF property.

3.4.2 Notice of Release. City shall give BNSF immediate notice to BNSF's Resource Operations Center at (800) 832-5452 in the event of any release of hazardous substances on or from BNSF's property, violation of Environmental Laws, or inspection or inquiry by governmental authorities charged with enforcing Environmental Laws with respect to City's use of BNSF's property. City shall use best efforts to promptly respond to any release arising from or related to its activities contemplated in this C&M Agreement only in compliance with Environmental Laws and the SMP. City shall also give BNSF notice of all measures undertaken on City's behalf to investigate, remediate, respond to or otherwise cure such release or violation.

3.4.3 Remediation of Release. In the event City has notice of a release or violation of Environmental Laws which occurred or may occur as a result of City's activities contemplated in this C&M Agreement, City shall take timely measures to investigate, remediate, respond to or otherwise cure as required by applicable law such release or violation affecting BNSF's property or improvements. If during the City C&M Work, soils or other materials considered to be environmentally contaminated are exposed, City will remove and safely dispose of said contaminated soils only in compliance with Environmental Laws and the SMP. Determination of soils contamination and applicable disposal procedures thereof will be made only by an agency having the capacity and authority to make such a determination.

3.4.4 Evidence of Compliance. City agrees to periodically to furnish BNSF upon written request with reasonable proof that it is in compliance with this **Article III, Section 3.4**.

3.4.5 Soil Management Plan. In addition to the other obligations of City and City Contractors as set forth herein, including but not limited to the provisions of **Exhibit C** and, as applicable, **Exhibit C-1(A)** or **Exhibit C-1(B)**, the Soil Management Plan attached hereto as **Exhibit E** ("**SMP**") sets forth additional obligations of City and BNSF with respect to the proper management of impacted environmental media during the Development Period (as defined in the Master Agreement).

3.5 Timing.

3.5.1 City will use commercially reasonable efforts to perform all City C&M Work in accordance with the Timeline.

3.5.2 BNSF and City mutually agree that no construction activities for the City C&M Work, nor future maintenance of any improvements which have a reasonable likelihood to delay train traffic on BNSF's main lines, will be permitted during the fourth quarter of each calendar year. Emergency work will be permitted only upon prior notification to BNSF's Network Operations Center (telephone number: 800 832-5452). BNSF and City mutually understand and agree that trains cannot be subjected to delay during this time period.

3.6 Indemnifications.

3.6.1 **TO THE FULLEST EXTENT PERMITTED BY LAW, CITY SHALL, AND SHALL CAUSE CITY'S CONTRACTORS TO, RELEASE, INDEMNIFY, DEFEND AND HOLD HARMLESS BNSF *AND BNSF'S AFFILIATED COMPANIES, PARTNERS, SUCCESSORS, ASSIGNS, LEGAL* REPRESENTATIVES, OFFICERS, DIRECTORS, SHAREHOLDERS, EMPLOYEES AND AGENTS FOR, FROM AND AGAINST ANY AND ALL CLAIMS, LIABILITIES, FINES, PENALTIES, COSTS, DAMAGES, LOSSES, LIENS, CAUSES OF ACTION, SUITS, DEMANDS, JUDGMENTS AND EXPENSES (INCLUDING, WITHOUT LIMITATION, COURT COSTS AND ATTORNEYS' FEES) OF ANY NATURE, KIND OR DESCRIPTION OF ANY PERSON (INCLUDING, WITHOUT LIMITATION, THE EMPLOYEES OF THE PARTIES HERETO) OR ENTITY DIRECTLY OR INDIRECTLY (COLLECTIVELY, "LIABILITIES") ARISING OUT OF, RESULTING FROM OR CAUSALLY RELATED TO (IN WHOLE OR IN PART):**

(i) **ANY RIGHTS OR INTERESTS GRANTED TO CITY OR ANY CITY PARTY (DEFINED BELOW) PURSUANT TO THIS C&M AGREEMENT, THE RIGHTS OF ENTRY, OR THE LICENSES AND/OR EASEMENTS GRANTED TO CITY PURSUANT TO THIS C&M AGREEMENT;**

(ii) **THE USE, OCCUPANCY OR PRESENCE OF CITY AND/OR CITY CONTRACTORS AND THEIR RESPECTIVE SUBCONTRACTORS, EMPLOYEES OR AGENTS (SUCH CITY CONTRACTORS, SUBCONTRACTORS, EMPLOYEES AND AGENTS BEING REFERRED TO INDIVIDUALLY AS A "CITY PARTY" AND COLLECTIVELY, THE "CITY PARTIES") AND/OR ANY *WORK PERFORMED BY CITY OR ANY CITY PARTY IN, ON, OR ABOUT BNSF'S PROPERTY OR* RIGHT-OF-WAY AND/OR THE WEST HAYMARKET PROJECT, INCLUDING, WITHOUT LIMITATION, OPERATION OF THE PEDESTRIAN BRIDGE, SECURITY FENCING (AS DEFINED IN THE MASTER AGREEMENT), OR STORM WATER MITIGATION (AS DEFINED IN THE MASTER AGREEMENT) BY CITY;**

(iii) **ANY ENVIRONMENTAL MATTERS ARISING FROM THE WEST HAYMARKET PROJECT AND/OR AFFECTING THE PROJECT AREA OR ANY PROPERTY ADJACENT THERETO;**

(iv) **ANY AND ALL CLAIMS BROUGHT BY ANY PARTY RELATED TO OR ARISING FROM THE ACQUISITION AND/OR DEVELOPMENT OF ANY AND ALL PROPERTY AS PART OF THE WEST HAYMARKET PROJECT, INCLUDING WITHOUT LIMITATION PROPERTY DESCRIBED IN THIS C&M AGREEMENT, THE MASTER AGREEMENT, THE EXCHANGE AGREEMENT, AND/OR THE RIGHTS OF ENTRY AGREEMENTS;**

(v) **THE CONDITION OF THE REPLACEMENT BNSF PROPERTY, INCLUDING WITHOUT LIMITATION ANY AND ALL CLAIMS RELATED TO OR ARISING FROM THE EXISTENCE OF ANY THIRD PARTY RESERVED RIGHTS AND/OR ANY THIRD PARTY'S EXERCISE OF ITS RESERVED RIGHTS;**

(vi) **ANY DAMAGE TO OR DESTRUCTION OF ANY TELECOMMUNICATION LINES IN CONNECTION WITH THE WEST HAYMARKET PROJECT BY CITY OR ANY CITY PARTY, INCLUDING BUT NOT LIMITED TO (A) ANY INJURY TO OR DEATH OF ANY PERSON EMPLOYED BY OR ON BEHALF OF ANY TELECOMMUNICATIONS COMPANY, AND/OR ITS CONTRACTORS, AGENTS AND/OR EMPLOYEES AS A RESULT OF SUCH DAMAGE OR DESTRUCTION, AND/OR (B) ANY CLAIM OR CAUSE OF ACTION FOR ALLEGED LOSS OF PROFITS**

OR REVENUE BY, OR LOSS OF SERVICE BY A CUSTOMER OR USER OF SUCH TELECOMMUNICATION COMPANY(IES) AS A RESULT OF SUCH DAMAGE OR DESTRUCTION;

(vii) **CITY'S OR ANY CITY PARTY'S BREACH OF THE TERMS AND CONDITIONS OF THIS C&M AGREEMENT, THE RIGHTS OF ENTRY, OR THE LICENSES AND/OR EASEMENTS GRANTED TO CITY PURSUANT TO THE MASTER AGREEMENT;**

(viii) **ANY ACT OR OMISSION OF CITY OR ITS OFFICERS, AGENTS, INVITEES, EMPLOYEES OR CONTRACTORS, OR A CITY PARTY, OR ANYONE DIRECTLY OR INDIRECTLY EMPLOYED BY ANY OF THEM, OR ANYONE THEY CONTROL OR EXERCISE CONTROL OVER.**

THE LIABILITY ASSUMED BY CITY AND THE CITY CONTRACTORS WILL NOT BE AFFECTED BY THE FACT, IF IT IS A FACT, THAT ANY DAMAGE, DESTRUCTION, INJURY OR DEATH WAS OCCASIONED BY OR CONTRIBUTED TO BY THE NEGLIGENCE OF BNSF, ITS AGENTS, SERVANTS, EMPLOYEES OR OTHERWISE, BUT EXCLUDING CLAIMS WHOLLY CAUSED BY BNSF'S SOLE NEGLIGENCE AND EXCLUDING CLAIMS TO THE EXTENT THAT SUCH CLAIMS ARE CAUSED BY THE WILLFUL MISCONDUCT OR GROSS NEGLIGENCE OF BNSF.

3.6.2 **FURTHER, TO THE FULLEST EXTENT PERMITTED BY LAW, CITY SHALL, AND SHALL CAUSE CITY'S CONTRACTORS TO, NOW AND FOREVER WAIVE ANY AND ALL CLAIMS, REGARDLESS OF WHETHER SUCH CLAIMS ARE BASED ON STRICT LIABILITY, NEGLIGENCE OR OTHERWISE, THAT BNSF IS AN "OWNER", "OPERATOR", "ARRANGER", OR "TRANSPORTER" WITH RESPECT TO THE EXCHANGE PROPERTIES (AS DEFINED IN THE EXCHANGE AGREEMENT), OR THE WEST HAYMARKET PROJECT AND/OR THE PROJECT AREA OR ANY PROPERTY ADJACENT THERETO, FOR THE PURPOSES OF CERCLA OR OTHER ENVIRONMENTAL LAWS. CITY WILL, AND WILL CAUSE CITY'S CONTRACTORS TO, INDEMNIFY, DEFEND AND HOLD BNSF HARMLESS FROM ANY AND ALL SUCH CLAIMS REGARDLESS OF THE NEGLIGENCE OF BNSF. CITY FURTHER AGREES THAT THE USE OF THE EXCHANGE PROPERTIES, OR THE WEST HAYMARKET PROJECT AND/OR THE PROJECT AREA OR ANY PROPERTY ADJACENT THERETO, AS CONTEMPLATED BY THIS C&M AGREEMENT SHALL NOT IN ANY WAY SUBJECT BNSF TO CLAIMS THAT BNSF IS OTHER THAN A COMMON CARRIER FOR PURPOSES OF ENVIRONMENTAL LAWS AND EXPRESSLY AGREES TO INDEMNIFY, DEFEND, AND HOLD BNSF HARMLESS FOR ANY AND ALL SUCH CLAIMS. IN NO EVENT SHALL BNSF BE RESPONSIBLE FOR THE ENVIRONMENTAL CONDITION OF THE EXCHANGE PROPERTIES, OR THE WEST HAYMARKET PROJECT AND/OR THE PROJECT AREA, OR ANY PROPERTY ADJACENT THERETO.**

3.6.3 **FURTHER, TO THE FULLEST EXTENT PERMITTED BY LAW, CITY AGREES, AND SHALL CAUSE CITY'S CONTRACTORS TO AGREE, REGARDLESS OF ANY NEGLIGENCE OR ALLEGED NEGLIGENCE OF BNSF, TO INDEMNIFY, DEFEND AND HOLD HARMLESS BNSF AGAINST AND ASSUME THE DEFENSE OF ANY LIABILITIES ASSERTED AGAINST OR SUFFERED BY BNSF UNDER OR RELATED TO THE FEDERAL EMPLOYERS' LIABILITY ACT ("FELA") WHENEVER EMPLOYEES OF CITY OR ANY OF ITS AGENTS, INVITEES, OR CONTRACTORS CLAIM OR ALLEGE THAT THEY ARE EMPLOYEES OF BNSF OR OTHERWISE. THIS INDEMNITY SHALL ALSO EXTEND, ON THE SAME BASIS, TO FELA CLAIMS BASED ON ACTUAL OR ALLEGED VIOLATIONS OF ANY FEDERAL, STATE OR LOCAL LAWS OR REGULATIONS, INCLUDING BUT NOT LIMITED TO THE SAFETY APPLIANCE ACT, THE LOCOMOTIVE INSPECTION ACT, THE OCCUPATIONAL SAFETY AND HEALTH ACT, THE RESOURCE CONSERVATION AND RECOVERY ACT, AND ANY SIMILAR STATE OR FEDERAL STATUTE.**

3.6.4 City agrees that its obligations under the provisions of this **Section 3.6** expressly includes claims related to property related to the West Haymarket Project that was formerly, but not currently, owned by BNSF and BNSF's predecessors-in-interest. City's indemnification obligations herein shall be in addition to, and not in limitation of, City's indemnification obligations pursuant to the terms and provisions of the Master Agreement, the Exchange Agreement and the Rights of Entry agreements.

3.7 Waiver of Municipal and Sovereign Immunity. To the fullest extent permitted by law, City waives its municipal immunity and its sovereign immunity with respect to BNSF for matters arising out of the West Haymarket Project, the Master Agreement, the Exchange Agreement, the Rights of Entry agreements, and this C&M Agreement, including, without limitation, (i) for environmental and other conditions of the Replacement BNSF Property that City is conveying to BNSF pursuant to the Master Agreement and the Exchange Agreement; (ii) for environmental and other conditions of the real property that BNSF is quitclaiming to City pursuant to the Master Agreement and the Exchange Agreement and of property related to the West Haymarket Project that was formerly, but not currently, owned by BNSF and BNSF's predecessors-in-interest, including remediation costs beyond Nebraska Department of Environmental Quality Title 200 funds ("**Title 200 Funding**"); (iii) for claims arising out of work performed by City or its contractors pursuant to the provisions of this C&M Agreement, the Master Agreement, the Exchange Agreement, the Rights of Entry agreements, and the Exchange Agreement; and (iv) for claims arising out of continuing rights of City to enter onto property of BNSF, including work performed by City and City Contractors on such property of BNSF. Any lawful waiver of City's sovereign immunity herein shall be in addition to, and not in limitation of, any lawful waiver of City's sovereign immunity pursuant to the terms and provisions of the Master Agreement, the Exchange Agreement, and the Rights of Entry agreements.

3.8 Insurance Obligations.

3.8.1 During the Development Period, City shall, at its sole cost and expense, procure and maintain the following insurance:

3.8.1.1 Commercial General Liability Insurance. This insurance shall contain broad form contractual liability in an amount of at least $25,000,000 per occurrence and an aggregate limit of $50,000,000, but in no event less than the amount otherwise carried by City. Coverage must be purchased on a post 1998 ISO occurrence form or equivalent and include coverage for, but not limited to, the following:

- Bodily Injury and Property Damage
- Personal Injury and Advertising Injury
- Fire legal liability
- Products and completed operations

This policy shall also contain the following endorsements, which shall be indicated on the certificate of insurance:

- The definition of insured contract shall be amended to remove any exclusion or other limitation for any work being done within 50 feet of railroad property.
- Waiver of subrogation in favor of and acceptable to Railroad.
- Additional insured endorsement in favor of and acceptable to Railroad
- Separation of insureds.
- The policy shall be primary and non-contributing with respect to any insurance carried by Railroad.

It is agreed that the workers' compensation and employers' liability related exclusions in the Commercial General Liability insurance policy(s) required herein are intended to apply to employees of the policy holder and shall not apply to Railroad employees.

3.8.1.2 Business Automobile Insurance. This insurance shall contain a combined single limit of at least $1,000,000 per occurrence, and include coverage for, but not limited to the following:

- Bodily injury and property damage
- Any and all vehicles owned, used or hired

This policy shall also contain the following endorsements or language, which shall be indicated on the certificate of insurance:

- Waiver of subrogation in favor of and acceptable to Railroad.
- Additional insured endorsement in favor or and acceptable to Railroad.
- Separation of insureds.
- The policy shall be primary and non-contributing with respect to any insurance carried by Railroad.

3.8.1.3 Workers' Compensation and Employers' Liability Insurance. This insurance shall include coverage for, but not limited to:

- City's statutory liability under the workers' compensation laws of the *state(s) in which the work is to be performed. If optional under State law,* the insurance must cover all employees anyway.
- Employers' Liability (Part B) with limits of at least $500,000 each accident, $500,000 by disease policy limit, $500,000 by disease each employee.

This policy shall also contain the following endorsements or language, which shall be indicated on the certificate of insurance:

- Waiver of subrogation in favor of and acceptable to Railroad.

3.8.1.4 Railroad Protective Liability Insurance. This insurance shall name only the Railroad as the Insured with coverage of at least $5,000,000.00 per occurrence and $10,000,000.00 in the aggregate. The policy shall be issued on a standard ISO form CG 00 35 10 93 and include the following:

- Endorsed to include the Pollution Exclusion Amendment (ISO form CG 28 31 10 93)
- Endorsed to include the Limited Seepage and Pollution Endorsement.
- *Endorsed to remove any exclusion for punitive damages.*
- No other endorsements restricting coverage may be added.
- The original policy must be provided to Railroad prior to performing any work or services under this C&M Agreement

In lieu of providing a Railroad Protective Liability Policy, City may participate in BNSF's Blanket Railroad Protective Liability Insurance Policy available to City and City Contractors.

3.8.1.5 Other Requirements:

All policies (applying to coverage listed above) must not contain an exclusion for punitive damages and certificates of insurance must reflect that no exclusion exists.

City agrees to waive its right of recovery against Railroad for all claims and suits against Railroad, except for claims and suits arising wholly out of the sole negligence, or to the extent caused by the gross negligence or willful misconduct, of Railroad. In addition, its insurers, through the terms of the policy or policy endorsement, waive their right of subrogation against Railroad for all claims and suits, except for claims and suits arising wholly out of the sole negligence, or to the extent caused by the gross negligence or willful misconduct, of Railroad. The certificate of insurance must reflect the waiver of subrogation endorsement. City further waives its right of recovery, and its insurers also waive their right of subrogation against Railroad for loss of its owned or leased property or property under City's care, custody or control, except for rights of recovery and rights of subrogation arising wholly out of the sole negligence, or to the extent caused by the gross negligence or willful misconduct, of Railroad.

City is allowed to self-insure up to $250,000 per occurrence and $250,000 aggregate on General Liability and Automotive Liability and up to $500,000 per occurrence and $500,000 aggregate on Worker's Compensation Liability without the prior written consent of Railroad. Any deductible, self-insured retention or other financial responsibility for claims must be covered directly by City in lieu of insurance. Any and all Railroad Liabilities that would otherwise, in accordance with the provisions

of this C&M Agreement, be covered by insurance will be covered as if City elected not to include a deductible, self-insured retention or other financial responsibility for claims.

Prior to commencing the City C&M Work, City must furnish to Railroad acceptable certificate(s) of insurance including an original signature of the authorized representative evidencing the required coverage, endorsements, and amendments. The policy(ies) must contain a provision that obligates the insurance company(ies) issuing such policy(ies) to notify Railroad in writing at least 30 days prior to any cancellation, non-renewal, substitution or material alteration. This cancellation provision must be indicated on the certificate of insurance. Upon request from Railroad, a certified duplicate original of any required policy must be furnished. Certificate(s) should be sent to the following address:

Ebix BPO
PO Box 12010-BN
Hemet, CA 92546-8010
Fax number: 951-652-2882
Email: bnsf@ebix.com

Upon notification to BNSF of cancellation, non-renewal, substitution or material alteration of any such policy(ies), BNSF shall have the option to (i) if feasible, pay, on behalf of the City, any and all such premiums, penalties, fees or expenses necessary to keep such policy(ies) in full force and effect; or (ii) in the event that such policy(ies) cannot be kept in full force and effect, enter into the open market and procure such policy(ies) of insurance on behalf of City as required by this C&M Agreement at the then-current market rate. Upon any of the above occurrences, BNSF shall invoice the City for reimbursement of all such premiums, penalties, fees or expenses advanced on City's behalf plus an additional fifteen (15%) of such advanced amounts as remuneration for BNSF's overhead. Such amounts advanced by BNSF shall be paid by City within thirty (30) days after delivery of a statement for such expense. Any insurance policy must be written by a reputable insurance company reasonably acceptable to Railroad or with a current Best's Guide Rating of A- and Class VII or better, and authorized to do business in the state(s) in which the service is to be provided.

City represents that this C&M Agreement has been thoroughly reviewed by its insurance agent(s)/broker(s), who have been instructed by City to procure the insurance coverage required by this C&M Agreement. Allocated Loss Expense must be in addition to all policy limits for coverages referenced above. City represents that it understands and its insurance agent(s)/broker(s) have been informed that the City's insurance coverage being procured by City herein is to protect, defend, indemnify and hold harmless BNSF from any and all Liabilities, as such term is defined herein, that may arise in connection with this C&M Agreement and City, to the fullest extent allowed by law, waives its sovereign and municipal immunity and any caps or limitations on legal liability that may result therefrom.

Not more frequently than once every five years, Railroad may reasonably modify the required insurance coverage to reflect then-current risk management practices in the railroad industry and underwriting practices in the insurance industry.

If any portion of the operation is to be subcontracted by City, City must require that City Contractors provide and maintain the insurance coverages set forth herein, naming Railroad as an additional insured; provided, however, that policy limits for Commercial General Liability Insurance may be reduced to $5,000,000 per occurrence and an aggregate limit of $10,000,000, but in no event less than the amount otherwise carried by the City Contractor. In addition, City must require that City Contractor release, defend and indemnify Railroad to the same extent and under the same terms and conditions as City is required to release, defend and indemnify Railroad herein.

Failure to provide evidence as required by this **Section 3.8** will entitle, but not require, Railroad to immediately suspend, until such default is cured, any and/or all work under this C&M Agreement, including without limitation: (i) BNSF Work, (ii) City C&M Work, and (iii) any other work on or affecting any BNSF property, subject to termination as provided in the Master Agreement. Acceptance of a certificate that does not comply with this section will not operate as a waiver of City's obligations hereunder.

The fact that insurance (including, without limitation, self-insurance) is obtained by City will not be deemed to release or diminish the liability of City including, without limitation, liability under the indemnity provisions of this C&M Agreement. Damages recoverable by Railroad will not be limited by the amount of the required insurance coverage.

For purposes of this **Section 3.8**, Railroad means "Burlington Northern Santa Fe, LLC", "BNSF Railway Company" and the subsidiaries, successors, assigns and affiliates of each.

3.8.2 During the Post-Development Period (as defined in the Master Agreement), City shall, and shall require City Contractors to, at City's sole cost and expense, procure and maintain the insurance coverages listed in the applicable Rights of Entry, continuing thereafter so long as the C&M Agreement and/or any Right of Entry agreement is in effect.

3.9 Adherence to Timeline. City must require City Contractors to reasonably adhere to the Timeline. The Parties mutually agree that BNSF's failure to complete the BNSF Work in accordance with *the Timeline due to inclement weather or unforeseen railroad emergencies will not constitute a breach of* this C&M Agreement by BNSF and will not subject BNSF to any liability. Regardless of the requirements of the Timeline, BNSF reserves the right to reallocate the labor forces assigned to complete the BNSF Work in the event of an emergency to provide for the immediate restoration of railroad operations (BNSF or its related railroads) or to protect persons or property on or near any BNSF owned property. BNSF will not be liable for any additional costs or expenses resulting from any such reallocation of its labor forces. The Parties mutually agree that any reallocation of labor forces by BNSF pursuant to this provision and any direct or indirect consequences or costs resulting from any such reallocation will not constitute a breach of this C&M Agreement by BNSF.

ARTICLE IV – MISCELLANEOUS

4.1 Any books, papers, receipts, and accounts of the Parties relating to the City C&M Work and the BNSF Additional City Cost Work will at all reasonable times and upon reasonable prior written notice be open to inspection and audit by the agents and authorized representatives of the Parties for a period of one (1) year after the date of the final disbursement from the Escrow Account.

4.2 The terms and conditions of indemnification and liability provisions of **Sections 3.6** and **3.7** shall survive expiration or termination of this C&M Agreement, the Master Agreement and the Exchange Agreement, and all Closings under the Exchange Agreement.

4.3 The covenants and provisions of this C&M Agreement are binding upon and inure to the benefit of the successors and assigns of the Parties. Notwithstanding the preceding sentence, neither Party may assign its rights and obligations hereunder without the prior written consent of the other Party. Any permitted assignment shall not terminate the liability of the assigning Party, unless a specific release of such liability in writing is given and signed by the other Party. Notwithstanding any contrary provision herein; City shall have the right to assign this C&M Agreement to the West Haymarket Joint Public Agency, a Nebraska joint public agency ("**JPA**") without further consent of BNSF provided (i) City delivers prior written notification to BNSF of the assignment, (ii) City and JPA enters into BNSF's then-standard Consent to Assignment form, pursuant to which City will remain jointly and severally liable for all of City's obligations hereunder, including without limitation City's liability and indemnification obligations; provided that BNSF agrees it will first send any claim or notice of default to JPA and will not pursue any action against City until thirty (30) days after the date of such claim or notice to JPA, unless failure to pursue action against City during such time would otherwise prejudice BNSF's rights, and (iii) City's entire interest under the Master Agreement, the Exchange Agreement, and all Rights of Entry agreements are assigned at the same time to JPA.

4.4 This C&M Agreement shall be in effect for so long as the Master Agreement and/or any Right of Entry is in effect; provided, however, that if the Master Agreement and all Rights of Entry have expired or been terminated, BNSF has the right to terminate this C&M Agreement upon written notice to City.

4.5 Neither termination nor expiration of this C&M Agreement will release either Party from any liability or obligation under this C&M Agreement, whether of indemnity or otherwise, resulting from any acts, omissions or events happening prior to the date of termination or expiration.

4.6 Any notice required or permitted to be given hereunder by one Party to the other shall be in writing and the same shall be given and shall be deemed to have been served and given if: (i) placed in the United States mail, certified, return receipt requested, or (ii) deposited into the custody of a nationally recognized overnight delivery service, addressed to the Party to be notified at the address for such Party specified below, or to such other address as the Party to be notified may designate by giving the other Party no less than thirty (30) days' advance written notice of such change in address.

If to BNSF: BNSF Railway Company
P.O. Box 961034
Fort Worth, TX 76161-0034.
Attn: Robert J. Boileau, P.E., Assistant Vice President, Engineering Services

If to City: City of Lincoln, Nebraska
555 South 10th Street
Lincoln, NE 68508
Attn: City Attorney

4.7 Time is of the essence of this C&M Agreement.

4.8 In any action (declaratory or otherwise) brought by either Party in connection with or arising out of the terms of this C&M Agreement, the prevailing Party in such action will be entitled to recover from the non-prevailing Party all actual costs, actual damages, and actual expenses, including, without limitation, reasonable attorneys' fees and charges to the fullest extent permitted by law.

4.9 Each Party and its counsel have reviewed and revised this C&M Agreement. The Parties agree that the rule of construction that any ambiguities are to be resolved against the drafting Party must not be employed to interpret this C&M Agreement or its amendments or exhibits.

4.10 If any clause or provision of this C&M Agreement is illegal, invalid or unenforceable under present or future laws effective during the term of this C&M Agreement, then and in that event, it is the intention of the Parties that the remainder of this C&M Agreement shall not be affected thereby, and it is also the intention of the Parties that in lieu of each clause or provision of this C&M Agreement that is illegal, invalid or unenforceable, there be added, as a part of this C&M Agreement, a clause or provision as similar in terms to such illegal, invalid or unenforceable clause or provision as may be possible and be legal, valid and enforceable.

4.11 This C&M Agreement, the Master Agreement, the Exchange Agreement, and, to the extent executed, the Right of Entry licenses and/or easements described herein, contain the entire agreement between BNSF and City with respect to the West Haymarket Project. Oral statements or prior written matters not specifically incorporated into this C&M Agreement are superseded hereby. No variation, modification, or change to this C&M Agreement, the Exchange Agreement or the Rights of Entry agreements shall bind either Party unless set forth in a document signed by both Parties. No failure or delay of either Party in exercising any right, power or privilege hereunder shall operate as a waiver of such Party's right to require strict compliance with any term of this C&M Agreement. The captions next to the section numbers of this C&M Agreement are for reference only and do not modify or affect this C&M Agreement.

4.12 No director, officer, elected or appointed official, or employee of either of the Parties shall be personally liable in the event of any default.

4.13 This C&M Agreement may be executed in more than one counterpart, including facsimile transmissions, each of which shall be deemed an original.

4.14 As of this same Effective Date, City and BNSF have also entered into the Master Agreement, the Exchange Agreement and to the extent executed, certain Right of Entry licenses and/or easements. After the Effective Date and upon completion of additional design work, City and BNSF expect to execute other Right of Entry licenses and/or easements. City and BNSF agree that, except as otherwise stated in **Article 1** of this C&M Agreement: (i) in the event the terms of the Master Agreement and the terms of the C&M Agreement, the Exchange Agreement and the various licenses and/or easements are inconsistent, then the Master Agreement shall prevail; (ii) in the event the terms of the Exchange Agreement and the terms of the C&M Agreement and the various licenses and/or easements are inconsistent, then the Exchange Agreement shall prevail, and (iii) in the event the terms of the C&M Agreement and the various licenses and/or easements are inconsistent, then the C&M Agreement shall prevail.

4.15 All aspects of this C&M Agreement shall be governed by the laws of the State of Nebraska.

4.16 To the fullest extent permitted by law any dispute arising under or in connection with this C&M Agreement or related to any subject matter which is the subject of this C&M Agreement shall be subject to the sole and exclusive jurisdiction of the United States District Court for the District of Nebraska. The aforementioned choice of venue is intended by the Parties to be mandatory and not permissive. Each Party hereby irrevocably consents to the jurisdiction of the United States District Court for the District of Nebraska in any such dispute and irrevocably waives, to the fullest extent permitted by law, any objection that it may now have or hereafter have to the laying of venue in such court and that any such dispute which is brought in such court has been brought in an inconvenient forum.

4.17 By signing below, the Parties affirm they have the legal authority to enter into this C&M Agreement.

4.18 Each Party will, whenever it shall be reasonably requested to do so by the other, promptly execute, acknowledge, and deliver, or cause to be executed, acknowledged, or delivered, any and all such reasonable further confirmations, instruments, or further assurances and consents as may be reasonably necessary or proper in order to effectuate the covenants and agreements herein provided. Each Party shall reasonably cooperate in good faith with the other and shall do any and all other acts and execute, acknowledge and deliver any and all documents so reasonably requested in order to satisfy the conditions set forth herein and carry out the intent and purposes of this C&M Agreement.

[*Signature page follows*]

Signature Page - C&M Agreement

IN WITNESS WHEREOF, the Parties have caused this C&M Agreement to be executed as of the date below each Party's signature; to be effective, however, as of the Effective Date above.

CITY OF LINCOLN, NEBRASKA, a Nebraska municipal corporation

By: _____
Chris Beutler, Mayor of Lincoln

Date: 10/19/2010

BNSF RAILWAY COMPANY, a Delaware corporation

By: _____
David L. Freeman, Vice President – Engineering

Date: _____

Signature Page - C&M Agreement

IN WITNESS WHEREOF, the Parties have caused this C&M Agreement to be executed as of the date below each Party's signature; to be effective, however, as of the Effective Date above.

CITY OF LINCOLN, NEBRASKA, a Nebraska municipal corporation

By: _____
Chris Beutler, Mayor of Lincoln

Date: _____

BNSF RAILWAY COMPANY, a Delaware corporation

By: _____
David L. Freeman, Vice President – Engineering

Date: _____

EXHIBIT A

Project Area

[See attached]

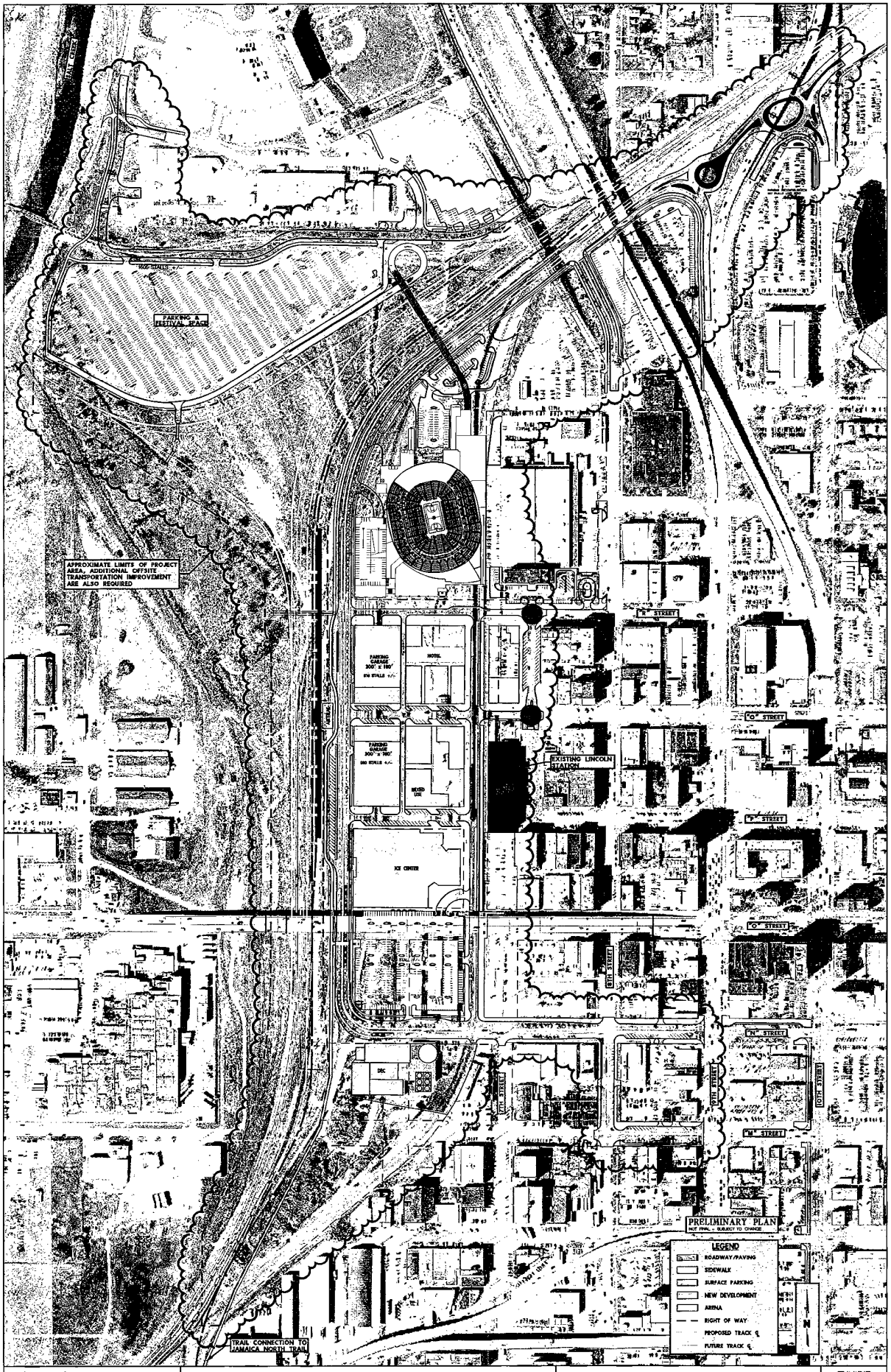
PARKING & FESTIVAL SPACE
APPROXIMATE LIMITS OF PROJECT AREA; ADDITIONAL OFFSITE TRANSPORTATION IMPROVEMENT ARE ALSO REQUIRED
PARKING GARAGE 300' x 180' 816 STALLS +/-
HOTEL
PARKING GARAGE 300' x 180' 360 STALLS +/-
MIXED USE
ICE CENTER
EXISTING LINCOLN STADIUM
"N" STREET
"O" STREET
"P" STREET
"Q" STREET
"R" STREET
"S" STREET
"T" STREET
"U" STREET
"V" STREET
"W" STREET
"X" STREET
"Y" STREET
"Z" STREET
"AA" STREET
"BB" STREET
"CC" STREET
"DD" STREET
"EE" STREET
"FF" STREET
"GG" STREET
"HH" STREET
"II" STREET
"JJ" STREET
"KK" STREET
"LL" STREET
"MM" STREET
"NN" STREET
"OO" STREET
"PP" STREET
"QQ" STREET
"RR" STREET
"SS" STREET
"TT" STREET
"UU" STREET
"VV" STREET
"WW" STREET
"XX" STREET
"YY" STREET
"ZZ" STREET
"AAA" STREET
"BBB" STREET
"CCC" STREET
"DDD" STREET
"EEE" STREET
"FFF" STREET
"GGG" STREET
"HHH" STREET
"III" STREET
"JJJ" STREET
"KKK" STREET
"LLL" STREET
"MMM" STREET
"NNN" STREET
"OOO" STREET
"PPP" STREET
"QQQ" STREET
"RRR" STREET
"SSS" STREET
"TTT" STREET
"UUU" STREET
"VVV" STREET
"WWW" STREET
"XXX" STREET
"YYY" STREET
"ZZZ" STREET
"AAAA" STREET
"BBBB" STREET
"CCCC" STREET
"DDDD" STREET
"EEEE" STREET
"FFFF" STREET
"GGGG" STREET
"HHHH" STREET
"IIII" STREET
"JJJJ" STREET
"KKKK" STREET
"LLLL" STREET
"MMMM" STREET
"NNNN" STREET
"OOOO" STREET
"PPPP" STREET
"QQQQ" STREET
"RRRR" STREET
"SSSS" STREET
"TTTT" STREET
"UUUU" STREET
"VVVV" STREET
"WWWW" STREET
"XXXX" STREET
"YYYY" STREET
"ZZZZ" STREET
"AAAAA" STREET
"BBBBB" STREET
"CCCCC" STREET
"DDDDD" STREET
"EEEEE" STREET
"FFFFF" STREET
"GGGGG" STREET
"HHHHH" STREET
"IIIII" STREET
"JJJJJ" STREET
"KKKKK" STREET
"LLLLL" STREET
"MMMMM" STREET
"NNNNN" STREET
"OOOOO" STREET
"PPPPP" STREET
"QQQQQ" STREET
"RRRRR" STREET
"SSSSS" STREET
"TTTTT" STREET
"UUUUU" STREET
"VVVVV" STREET
"WWWWW" STREET
"XXXXX" STREET
"YYYYY" STREET
"ZZZZZ" STREET
"AAAAAA" STREET
"BBBBBB" STREET
"CCCCCC" STREET
"DDDDDD" STREET
"EEEEEE" STREET
"FFFFFF" STREET
"GGGGGG" STREET
"HHHHHH" STREET
"IIIIII" STREET
"JJJJJJ" STREET
"KKKKKK" STREET
"LLLLLL" STREET
"MMMMMM" STREET
"NNNNNN" STREET
"OOOOOO" STREET
"PPPPPP" STREET
"QQQQQQ" STREET
"RRRRRR" STREET
"SSSSSS" STREET
"TTTTTT" STREET
"UUUUUU" STREET
"VVVVVV" STREET
"WWWWWW" STREET
"XXXXXX" STREET
"YYYYYY" STREET
"ZZZZZZ" STREET
"AAAAAAA" STREET
"BBBBBBB" STREET
"CCCCCCC" STREET
"DDDDDDD" STREET
"EEEEEEE" STREET
"FFFFFFF" STREET
"GGGGGGG" STREET
"HHHHHHH" STREET
"IIIIIII" STREET
"JJJJJJJ" STREET
"KKKKKKK" STREET
"LLLLLLL" STREET
"MMMMMMM" STREET
"NNNNNNN" STREET
"OOOOOOO" STREET
"PPPPPPP" STREET
"QQQQQQQ" STREET
"RRRRRRR" STREET
"SSSSSSS" STREET
"TTTTTTT" STREET
"UUUUUUU" STREET
"VVVVVVV" STREET
"WWWWWWW" STREET
"XXXXXXX" STREET
"YYYYYYY" STREET
"ZZZZZZZ" STREET
"AAAAAAAA" STREET
"BBBBBBBB" STREET
"CCCCCCCC" STREET
"DDDDDDDD" STREET
"EEEEEEEE" STREET
"FFFFFFFF" STREET
"GGGGGGGG" STREET
"HHHHHHHH" STREET
"IIIIIIII" STREET
"JJJJJJJJ" STREET
"KKKKKKKK" STREET
"LLLLLLLL" STREET
"MMMMMMMM" STREET
"NNNNNNNN" STREET
"OOOOOOOO" STREET
"PPPPPPPP" STREET
"QQQQQQQQ" STREET
"RRRRRRRR" STREET
"SSSSSSSS" STREET
"TTTTTTTT" STREET
"UUUUUUUU" STREET
"VVVVVVVV" STREET
"WWWWWWWW" STREET
"XXXXXXXX" STREET
"YYYYYYYY" STREET
"ZZZZZZZZ" STREET
"AAAAAAAAA" STREET
"BBBBBBBBB" STREET
"CCCCCCCCC" STREET
"DDDDDDDDD" STREET
"EEEEEEEEE" STREET
"FFFFFFFFF" STREET
"GGGGGGGGG" STREET
"HHHHHHHHH" STREET
"IIIIIIIII" STREET
"JJJJJJJJJ" STREET
"KKKKKKKKK" STREET
"LLLLLLLLL" STREET
"MMMMMMMMM" STREET
"NNNNNNNNN" STREET
"OOOOOOOOO" STREET
"PPPPPPPPP" STREET
"QQQQQQQQQ" STREET
"RRRRRRRRR" STREET
"SSSSSSSSS" STREET
"TTTTTTTTT" STREET
"UUUUUUUUU" STREET
"VVVVVVVVV" STREET
"WWWWWWWWW" STREET
"XXXXXXXXX" STREET
"YYYYYYYYY" STREET
"ZZZZZZZZZ" STREET
"AAAAAAAAAA" STREET
"BBBBBBBBBB" STREET
"CCCCCCCCCC" STREET
"DDDDDDDDDD" STREET
"EEEEEEEEEE" STREET
"FFFFFFFFFF" STREET
"GGGGGGGGGG" STREET
"HHHHHHHHHH" STREET
"IIIIIIIIII" STREET
"JJJJJJJJJJ" STREET
"KKKKKKKKKK" STREET
"LLLLLLLLLL" STREET
"MMMMMMMMMM" STREET
"NNNNNNNNNN" STREET
"OOOOOOOOOO" STREET
"PPPPPPPPPP" STREET
"QQQQQQQQQQ" STREET
"RRRRRRRRRR" STREET
"SSSSSSSSSS" STREET
"TTTTTTTTTT" STREET
"UUUUUUUUUU" STREET
"VVVVVVVVVV" STREET
"WWWWWWWWWW" STREET
"XXXXXXXXXX" STREET
"YYYYYYYYYY" STREET
"ZZZZZZZZZZ" STREET
"AAAAAAAAAAA" STREET
"BBBBBBBBBBB" STREET
"CCCCCCCCCCC" STREET
"DDDDDDDDDDD" STREET
"EEEEEEEEEEE" STREET
"FFFFFFFFFFF" STREET
"GGGGGGGGGGG" STREET
"HHHHHHHHHHH" STREET
"IIIIIIIIIII" STREET
"JJJJJJJJJJJ" STREET
"KKKKKKKKKKK" STREET
"LLLLLLLLLLL" STREET
"MMMMMMMMMMM" STREET
"NNNNNNNNNNN" STREET
"OOOOOOOOOOO" STREET
"PPPPPPPPPPP" STREET
"QQQQQQQQQQQ" STREET
"RRRRRRRRRRR" STREET
"SSSSSSSSSSS" STREET
"TTTTTTTTTTT" STREET
"UUUUUUUUUUU" STREET
"VVVVVVVVVVV" STREET
"WWWWWWWWWWW" STREET
"XXXXXXXXXXX" STREET
"YYYYYYYYYYY" STREET
"ZZZZZZZZZZZ" STREET
"AAAAAAAAAAAA" STREET
"BBBBBBBBBBBB" STREET
"CCCCCCCCCCCC" STREET
"DDDDDDDDDDDD" STREET
"EEEEEEEEEEEE" STREET
"FFFFFFFFFFFF" STREET
"GGGGGGGGGGGG" STREET
"HHHHHHHHHHHH" STREET
"IIIIIIIIIIII" STREET
"JJJJJJJJJJJJ" STREET
"KKKKKKKKKKKK" STREET
"LLLLLLLLLLLL" STREET
"MMMMMMMMMMMM" STREET
"NNNNNNNNNNNN" STREET
"OOOOOOOOOOOO" STREET
"PPPPPPPPPPPP" STREET
"QQQQQQQQQQQQ" STREET
"RRRRRRRRRRRR" STREET
"SSSSSSSSSSSS" STREET
"TTTTTTTTTTTT" STREET
"UUUUUUUUUUUU" STREET
"VVVVVVVVVVVV" STREET
"WWWWWWWWWWWW" STREET
"XXXXXXXXXXXX" STREET
"YYYYYYYYYYYY" STREET
"ZZZZZZZZZZZZ" STREET
"AAAAAAAAAAAAA" STREET
"BBBBBBBBBBBBB" STREET
"CCCCCCCCCCCCC" STREET
"DDDDDDDDDDDDD" STREET
"EEEEEEEEEEEEE" STREET
"FFFFFFFFFFFFF" STREET
"GGGGGGGGGGGGG" STREET
"HHHHHHHHHHHHH" STREET
"IIIIIIIIIIIII" STREET
"JJJJJJJJJJJJJ" STREET
"KKKKKKKKKKKKK" STREET
"LLLLLLLLLLLLL" STREET
"MMMMMMMMMMMMM" STREET
"NNNNNNNNNNNNN" STREET
"OOOOOOOOOOOOO" STREET
"PPPPPPPPPPPPP" STREET
"QQQQQQQQQQQQQ" STREET
"RRRRRRRRRRRRR" STREET
"SSSSSSSSSSSSS" STREET
"TTTTTTTTTTTTT" STREET
"UUUUUUUUUUUUU" STREET
"VVVVVVVVVVVVV" STREET
"WWWWWWWWWWWWW" STREET
"XXXXXXXXXXXXX" STREET
"YYYYYYYYYYYYY" STREET
"ZZZZZZZZZZZZZ" STREET
"AAAAAAAAAAAAAA" STREET
"BBBBBBBBBBBBBB" STREET
"CCCCCCCCCCCCCC" STREET
"DDDDDDDDDDDDDD" STREET
"EEEEEEEEEEEEEE" STREET
"FFFFFFFFFFFFFF" STREET
"GGGGGGGGGGGGGG" STREET
"HHHHHHHHHHHHHH" STREET
"IIIIIIIIIIIIII" STREET
"JJJJJJJJJJJJJJ" STREET
"KKKKKKKKKKKKKK" STREET
"LLLLLLLLLLLLLL" STREET
"MMMMMMMMMMMMMM" STREET
"NNNNNNNNNNNNNN" STREET
"OOOOOOOOOOOOOO" STREET
"PPPPPPPPPPPPPP" STREET
"QQQQQQQQQQQQQQ" STREET
"RRRRRRRRRRRRRR" STREET
"SSSSSSSSSSSSSS" STREET
"TTTTTTTTTTTTTT" STREET
"UUUUUUUUUUUUUU" STREET
"VVVVVVVVVVVVVV" STREET
"WWWWWWWWWWWWWW" STREET
"XXXXXXXXXXXXXX" STREET
"YYYYYYYYYYYYYY" STREET
"ZZZZZZZZZZZZZZ" STREET
"AAAAAAAAAAAAAAA" STREET
"BBBBBBBBBBBBBBB" STREET
"CCCCCCCCCCCCCCC" STREET
"DDDDDDDDDDDDDDD" STREET
"EEEEEEEEEEEEEEE" STREET
"FFFFFFFFFFFFFFF" STREET
"GGGGGGGGGGGGGGG" STREET
"HHHHHHHHHHHHHHH" STREET
"IIIIIIIIIIIIIII" STREET
"JJJJJJJJJJJJJJJ" STREET
"KKKKKKKKKKKKKKK" STREET
"LLLLLLLLLLLLLLL" STREET
"MMMMMMMMMMMMMMM" STREET
"NNNNNNNNNNNNNNN" STREET
"OOOOOOOOOOOOOOO" STREET
"PPPPPPPPPPPPPPP" STREET
"QQQQQQQQQQQQQQQ" STREET
"RRRRRRRRRRRRRRR" STREET
"SSSSSSSSSSSSSSS" STREET
"TTTTTTTTTTTTTTT" STREET
"UUUUUUUUUUUUUUU" STREET
"VVVVVVVVVVVVVVV" STREET
"WWWWWWWWWWWWWWW" STREET
"XXXXXXXXXXXXXXX" STREET
"YYYYYYYYYYYYYYY" STREET
"ZZZZZZZZZZZZZZZ" STREET
"AAAAAAAAAAAAAAAA" STREET
"BBBBBBBBBBBBBBBB" STREET
"CCCCCCCCCCCCCCCC" STREET
"DDDDDDDDDDDDDDDD" STREET
"EEEEEEEEEEEEEEEE" STREET
"FFFFFFFFFFFFFFFF" STREET
"GGGGGGGGGGGGGGGG" STREET
"HHHHHHHHHHHHHHHH" STREET
"IIIIIIIIIIIIIIII" STREET
"JJJJJJJJJJJJJJJJ" STREET
"KKKKKKKKKKKKKKKK" STREET
"LLLLLLLLLLLLLLLL" STREET
"MMMMMMMMMMMMMMMM" STREET
"NNNNNNNNNNNNNNNN" STREET
"OOOOOOOOOOOOOOOO" STREET
"PPPPPPPPPPPPPPPP" STREET
"QQQQQQQQQQQQQQQQ" STREET
"RRRRRRRRRRRRRRRR" STREET
"SSSSSSSSSSSSSSSS" STREET
"TTTTTTTTTTTTTTTT" STREET
"UUUUUUUUUUUUUUUU" STREET
"VVVVVVVVVVVVVVVV" STREET
"WWWWWWWWWWWWWWWW" STREET
"XXXXXXXXXXXXXXXX" STREET
"YYYYYYYYYYYYYYYY" STREET
"ZZZZZZZZZZZZZZZZ" STREET
"AAAAAAAAAAAAAAAAA" STREET
"BBBBBBBBBBBBBBBBB" STREET
"CCCCCCCCCCCCCCCCC" STREET
"DDDDDDDDDDDDDDDDD" STREET
"EEEEEEEEEEEEEEEEE" STREET
"FFFFFFFFFFFFFFFFF" STREET
"GGGGGGGGGGGGGGGGG" STREET
"HHHHHHHHHHHHHHHHH" STREET
"IIIIIIIIIIIIIIIII" STREET
"JJJJJJJJJJJJJJJJJ" STREET
"KKKKKKKKKKKKKKKKK" STREET
"LLLLLLLLLLLLLLLLL" STREET
"MMMMMMMMMMMMMMMMM" STREET
"NNNNNNNNNNNNNNNNN" STREET
"OOOOOOOOOOOOOOOOO" STREET
"PPPPPPPPPPPPPPPPP" STREET
"QQQQQQQQQQQQQQQQQ" STREET
"RRRRRRRRRRRRRRRRR" STREET
"SSSSSSSSSSSSSSSSS" STREET
"TTTTTTTTTTTTTTTTT" STREET
"UUUUUUUUUUUUUUUUU" STREET
"VVVVVVVVVVVVVVVVV" STREET
"WWWWWWWWWWWWWWWWW" STREET
"XXXXXXXXXXXXXXXXX" STREET
"YYYYYYYYYYYYYYYYY" STREET
"ZZZZZZZZZZZZZZZZZ" STREET
"AAAAAAAAAAAAAAAAAA" STREET
"BBBBBBBBBBBBBBBBBB" STREET
"CCCCCCCCCCCCCCCCCC" STREET
"DDDDDDDDDDDDDDDDDD" STREET
"EEEEEEEEEEEEEEEEEE" STREET
"FFFFFFFFFFFFFFFFFF" STREET
"GGGGGGGGGGGGGGGGGG" STREET
"HHHHHHHHHHHHHHHHHH" STREET
"IIIIIIIIIIIIIIIIII" STREET
"JJJJJJJJJJJJJJJJJJ" STREET
"KKKKKKKKKKKKKKKKKK" STREET
"LLLLLLLLLLLLLLLLLL" STREET
"MMMMMMMMMMMMMMMMMM" STREET
"NNNNNNNNNNNNNNNNNN" STREET
"OOOOOOOOOOOOOOOOOO" STREET
"PPPPPPPPPPPPPPPPPP" STREET
"QQQQQQQQQQQQQQQQQQ" STREET
"RRRRRRRRRRRRRRRRRR" STREET
"SSSSSSSSSSSSSSSSSS" STREET
"TTTTTTTTTTTTTTTTTT" STREET
"UUUUUUUUUUUUUUUUUU" STREET
"VVVVVVVVVVVVVVVVVV" STREET
"WWWWWWWWWWWWWWWWWW" STREET
"XXXXXXXXXXXXXXXXXX" STREET
"YYYYYYYYYYYYYYYYYY" STREET
"ZZZZZZZZZZZZZZZZZZ" STREET
"AAAAAAAAAAAAAAAAAAA" STREET
"BBBBBBBBBBBBBBBBBBB" STREET
"CCCCCCCCCCCCCCCCCCC" STREET
"DDDDDDDDDDDDDDDDDDD" STREET
"EEEEEEEEEEEEEEEEEEE" STREET
"FFFFFFFFFFFFFFFFFFF" STREET
"GGGGGGGGGGGGGGGGGGG" STREET
"HHHHHHHHHHHHHHHHHHH" STREET
"IIIIIIIIIIIIIIIIIII" STREET
"JJJJJJJJJJJJJJJJJJJ" STREET
"KKKKKKKKKKKKKKKKKKK" STREET
"LLLLLLLLLLLLLLLLLLL" STREET
"MMMMMMMMMMMMMMMMMMM" STREET
"NNNNNNNNNNNNNNNNNNN" STREET
"OOOOOOOOOOOOOOOOOOO" STREET
"PPPPPPPPPPPPPPPPPPP" STREET
"QQQQQQQQQQQQQQQQQQQ" STREET
"RRRRRRRRRRRRRRRRRRR" STREET
"SSSSSSSSSSSSSSSSSSS" STREET
"TTTTTTTTTTTTTTTTTTT" STREET
"UUUUUUUUUUUUUUUUUUU" STREET
"VVVVVVVVVVVVVVVVVVV" STREET
"WWWWWWWWWWWWWWWWWWW" STREET
"XXXXXXXXXXXXXXXXXXX" STREET
"YYYYYYYYYYYYYYYYYYY" STREET
"ZZZZZZZZZZZZZZZZZZZ" STREET
"AAAAAAAAAAAAAAAAAAAA" STREET
"BBBBBBBBBBBBBBBBBBBB" STREET
"CCCCCCCCCCCCCCCCCCCC" STREET
"DDDDDDDDDDDDDDDDDDDD" STREET
"EEEEEEEEEEEEEEEEEEEE" STREET
"FFFFFFFFFFFFFFFFFFFF" STREET
"GGGGGGGGGGGGGGGGGGGG" STREET
"HHHHHHHHHHHHHHHHHHHH" STREET
"IIIIIIIIIIIIIIIIIIII" STREET
"JJJJJJJJJJJJJJJJJJJJ" STREET
"KKKKKKKKKKKKKKKKKKKK" STREET
"LLLLLLLLLLLLLLLLLLLL" STREET
"MMMMMMMMMMMMMMMMMMMM" STREET
"NNNNNNNNNNNNNNNNNNNN" STREET
"OOOOOOOOOOOOOOOOOOOO" STREET
"PPPPPPPPPPPPPPPPPPPP" STREET
"QQQQQQQQQQQQQQQQQQQQ" STREET
"RRRRRRRRRRRRRRRRRRRR" STREET
"SSSSSSSSSSSSSSSSSSSS" STREET
"TTTTTTTTTTTTTTTTTTTT" STREET
"UUUUUUUUUUUUUUUUUUUU" STREET
"VVVVVVVVVVVVVVVVVVVV" STREET
"WWWWWWWWWWWWWWWWWWWW" STREET
"XXXXXXXXXXXXXXXXXXXX" STREET
"YYYYYYYYYYYYYYYYYYYY" STREET
"ZZZZZZZZZZZZZZZZZZZZ" STREET
"AAAAAAAAAAAAAAAAAAAAA" STREET
"BBBBBBBBBBBBBBBBBBBBB" STREET
"CCCCCCCCCCCCCCCCCCCCC" STREET
"DDDDDDDDDDDDDDDDDDDDD" STREET
"EEEEEEEEEEEEEEEEEEEEE" STREET
"FFFFFFFFFFFFFFFFFFFFF" STREET
"GGGGGGGGGGGGGGGGGGGGG" STREET
"HHHHHHHHHHHHHHHHHHHHH" STREET
"IIIIIIIIIIIIIIIIIIIII" STREET
"JJJJJJJJJJJJJJJJJJJJJ" STREET
"KKKKKKKKKKKKKKKKKKKKK" STREET
"LLLLLLLLLLLLLLLLLLLLL" STREET
"MMMMMMMMMMMMMMMMMMMMM" STREET
"NNNNNNNNNNNNNNNNNNNNN" STREET
"OOOOOOOOOOOOOOOOOOOOO" STREET
"PPPPPPPPPPPPPPPPPPPPP" STREET
"QQQQQQQQQQQQQQQQQQQQQ" STREET
"RRRRRRRRRRRRRRRRRRRRR" STREET
"SSSSSSSSSSSSSSSSSSSSS" STREET
"TTTTTTTTTTTTTTTTTTTTT" STREET
"UUUUUUUUUUUUUUUUUUUUU" STREET
"VVVVVVVVVVVVVVVVVVVVV" STREET
"WWWWWWWWWWWWWWWWWWWWW" STREET
"XXXXXXXXXXXXXXXXXXXXX" STREET
"YYYYYYYYYYYYYYYYYYYYY" STREET
"ZZZZZZZZZZZZZZZZZZZZZ" STREET
"AAAAAAAAAAAAAAAAAAAAAA" STREET
"BBBBBBBBBBBBBBBBBBBBBB" STREET
"CCCCCCCCCCCCCCCCCCCCCC" STREET
"DDDDDDDDDDDDDDDDDDDDDD" STREET
"EEEEEEEEEEEEEEEEEEEEEE" STREET
"FFFFFFFFFFFFFFFFFFFFFF" STREET
"GGGGGGGGGGGGGGGGGGGGGG" STREET
"HHHHHHHHHHHHHHHHHHHHHH" STREET
"IIIIIIIIIIIIIIIIIIIIII" STREET
"JJJJJJJJJJJJJJJJJJJJJJ" STREET
"KKKKKKKKKKKKKKKKKKKKKK" STREET
"LLLLLLLLLLLLLLLLLLLLLL" STREET
"MMMMMMMMMMMMMMMMMMMMMM" STREET
"NNNNNNNNNNNNNNNNNNNNNN" STREET
"OOOOOOOOOOOOOOOOOOOOOO" STREET
"PPPPPPPPPPPPPPPPPPPPPP" STREET
"QQQQQQQQQQQQQQQQQQQQQQ" STREET
"RRRRRRRRRRRRRRRRRRRRRR" STREET
"SSSSSSSSSSSSSSSSSSSSSS" STREET
"TTTTTTTTTTTTTTTTTTTTTT" STREET
"UUUUUUUUUUUUUUUUUUUUUU" STREET
"VVVVVVVVVVVVVVVVVVVVVV" STREET
"WWWWWWWWWWWWWWWWWWWWWW" STREET
"XXXXXXXXXXXXXXXXXXXXXX" STREET
"YYYYYYYYYYYYYYYYYYYYYY" STREET
"ZZZZZZZZZZZZZZZZZZZZZZ" STREET
"AAAAAAAAAAAAAAAAAAAAAAA" STREET
"BBBBBBBBBBBBBBBBBBBBBBB" STREET
"CCCCCCCCCCCCCCCCCCCCCCC" STREET
"DDDDDDDDDDDDDDDDDDDDDDD" STREET
"EEEEEEEEEEEEEEEEEEEEEEE" STREET
"FFFFFFFFFFFFFFFFFFFFFFF" STREET
"GGGGGGGGGGGGGGGGGGGGGGG" STREET
"HHHHHHHHHHHHHHHHHHHHHHH" STREET
"IIIIIIIIIIIIIIIIIIIIIII" STREET
"JJJJJJJJJJJJJJJJJJJJJJJ" STREET
"KKKKKKKKKKKKKKKKKKKKKKK" STREET
"LLLLLLLLLLLLLLLLLLLLLLL" STREET
"MMMMMMMMMMMMMMMMMMMMMMM" STREET
"NNNNNNNNNNNNNNNNNNNNNNN" STREET
"OOOOOOOOOOOOOOOOOOOOOOO" STREET
"PPPPPPPPPPPPPPPPPPPPPPP" STREET
"QQQQQQQQQQQQQQQQQQQQQQQ" STREET
"RRRRRRRRRRRRRRRRRRRRRRR" STREET
"SSSSSSSSSSSSSSSSSSSSSSS" STREET
"TTTTTTTTTTTTTTTTTTTTTTT" STREET
"UUUUUUUUUUUUUUUUUUUUUUU" STREET
"VV

EXHIBIT B

Form of BNSF Plan Approval

Gerald Maczuga
Project Engineer

BNSF Railway Company
201 N 7th St
Lincoln, NE 68508
402-458-7537 (office)
402-458-4376 (fax)
Gerald.Maczuga@BNSF.com

Date: _____

Ernest R. Peo, III
City of Lincoln, Nebraska
555 South 10th Street
Lincoln, NE 68508
Attn: Chief Assistant City Attorney

Re: Review of Plans and Specifications dated September 2, 2010, drafted by Olsson Associates (hereinafter called the "**Plans and Specifications**")

Dear Mr. Peo:

This letter serves as BNSF Railway Company's ("**BNSF**") response to its review of the Plans and Specifications covering the construction of the West Haymarket Utility Relocation - Project Number 870501. BNSF has reviewed these plans and no exceptions are taken. BNSF has not reviewed the design details or calculations for structural integrity or engineering accuracy. BNSF accepts no responsibility for errors or omissions in the design of the project. These comments are given to the City of Lincoln, Nebraska ("**City**") pursuant to Section 3.1.1 of that certain Construction and Maintenance Agreement between BNSF and City, dated _____, 2010. If the Plans and Specifications are revised by City subsequent to the date set forth above, this letter shall no longer serve as BNSF's written comments and City must resubmit said Plans and Specifications to BNSF for review.

Regards,

Gerald Maczuga
Project Engineer

EXHIBIT C

Contractor Requirements

1.01 General

- **1.01.01** The Contractor must cooperate with **BNSF RAILWAY COMPANY**, hereinafter referred to as "Railway" during the performance of the C&M Work (as defined in Exhibit C-1) and any other work over, under, on or adjacent to Railway Property.

- **1.01.02** The Contractor must execute and deliver to the Railway duplicate copies of the Exhibit C-1 Contractor Right of Entry for C&M Work, in the form attached hereto, obligating the Contractor to provide and maintain in full force and effect the insurance called for under Section 3 of said Exhibit C-1. Questions regarding procurement of the Railroad Protective Liability Insurance should be directed to Rosa Martinez at Marsh, USA, 214-303-8519.

- **1.01.03** The Contractor must plan, schedule and conduct all C&M Work activities so as not to interfere with the movement of any trains on Railway Property.

- **1.01.04** The Contractor's right to enter Railway Property is subject to the absolute right of Railway to cause the Contractor's work on Railway Property to cease if, in the opinion of Railway, Contractor's activities create a hazard to Railway Property, employees, and/or operations. Railway will have the right to stop construction work on the C&M Work if any of the following events take place: (i) Contractor (or any of its subcontractors) performs the C&M Work in a manner contrary to the plans and specifications approved by Railway; (ii) Contractor (or any of its subcontractors), in Railway's opinion, prosecutes the C&M Work in a manner which is hazardous to Railway Property, facilities or the safe and expeditious movement of railroad traffic; or (iii) the insurance described in the attached Exhibit C-1 is canceled during the course of the C&M Work. The work stoppage will continue until all necessary actions are taken by Contractor or its subcontractor to rectify the situation to the satisfaction of Railway's Division Engineer or until additional insurance has been delivered to and accepted by Railway. Any such work stoppage under this provision will not give rise to any liability on the part of Railway. Railway's right to stop the C&M Work is in addition to any other rights Railway may have including, but not limited to, actions or suits for damages or lost profits. In the event that Railway desires to stop the C&M Work, Railway agrees to immediately notify the following individual in writing:

  Roger Figard, City Engineer
  Department of Public Works and Utilities
  City of Lincoln, Nebraska
  555 South 10th Street
  Lincoln, NE 68508

- **1.01.05** Contractor shall, and shall cause all Contractor parties to, strictly comply with all federal, state and local environmental laws and regulations in its use of Railway's Property, including, but not limited to, the Resource Conservation and Recovery Act, as amended (RCRA), the Clean Water Act, the Oil Pollution Act, the Hazardous Materials Transportation Act, CERCLA (collectively, the "**Environmental Laws**") with respect to Railway's Property. Contractor shall not maintain a "treatment," "storage," "transfer" or "disposal" facility, or "underground storage tank," as those terms are defined by Environmental Laws, on Railway's Property. Contractor shall not handle, transport, release or suffer the release of "hazardous

waste" or "hazardous substances", as "hazardous waste" and "hazardous substances" may now or in the future be defined by any Environmental Laws, except as may be pre-existing in Railway Property and as encountered in the C&M Work and then only in compliance with Environmental Laws, and shall not use any soils or other materials containing hazardous waste or hazardous substances in connection with the C&M Work, or otherwise bring any hazardous waste or hazardous substances onto any Railway Property.

Contractor shall give Railway immediate notice to Railway's Resource Operations Center at (800) 832-5452 in the event of any release of hazardous substances on or from Railway Property, violation of Environmental Laws, or inspection or inquiry by governmental authorities charged with enforcing Environmental Laws with respect to Contractor's use of Railway Property. Contractor shall use best efforts to promptly respond to any release arising from or related to its activities contemplated in the C&M Work. Contractor shall also give Railway notice of all measures undertaken on Contractor's behalf to investigate, remediate, respond to or otherwise cure such release or violation.

In the event Contractor has notice of a release or violation of Environmental Laws which occurred or may occur as a result of Contractor's activities contemplated in the C&M Work, Contractor shall take timely measures to investigate, remediate, respond to or otherwise cure as required by applicable law such release or violation affecting Railway Property or improvements. If during the C&M Work, soils or other materials considered to be environmentally contaminated are exposed, Contractor will remove and safely dispose of said contaminated soils. Determination of soils contamination and applicable disposal procedures thereof will be made only by an agency having the capacity and authority to make such a determination.

Contractor agrees to periodically to furnish Railway upon written request with reasonable proof that it is in compliance with this **Section 1.01.05**.

- **1.01.06** All C&M Work must performed (i) in a good and workmanlike manner, (ii) in accordance with plans and specifications approved in advance by Railway (the "**Approved Plans**"), (iii) in conformance with applicable building codes and all applicable engineering, safety and any and all laws, statutes, regulations, ordinances, orders, covenants, restrictions, or decisions of any court of competent jurisdiction ("**Legal Requirements**"), (iv) in accordance with the accepted industry standards of care, skill and diligence, and (v) in such a manner as shall not adversely affect the structural integrity or maintenance of any Railway improvements or other improvements on or near Railway Property, or any lateral support of any structures adjacent to or in the proximity of any Railway improvements or Railway Property. In addition, the C&M Work must be promptly commenced by the Contractor and thereafter diligently prosecuted to conclusion in its logical order and sequence. Furthermore, any changes or modifications of the C&M Work which affect Railway will be subject to Railway's written approval prior to the commencement of any such changes or modifications from the Railway's Project Engineer.

- **1.01.07** Contractor shall be responsible for all job site cleanup and restoration, including removal of all construction materials, concrete debris, surplus soil, refuse, contaminated soils, asphalt debris, litter and other waste materials resulting from the C&M Work to the reasonable satisfaction of Railway's Division Engineer.

- **1.01.08** The Contractor must notify the City at City's City Engineer, telephone number (402) 441-7567 and Railway's Project Engineer, telephone number (402) 458-7537 at least ten (10) calendar days before commencing any C&M Work on Railway Property.

- **1.01.09** For any bridge demolition and/or falsework above any tracks or any excavations located with any part of the excavations located within, whichever is greater, twenty-five (25) feet of the nearest track or intersecting a slope from the plane of the top of rail on a 2 horizontal to 1 vertical slope beginning at eleven (11) feet from centerline of the nearest track, both measured perpendicular to center line of track, the Contractor must furnish the Railway five sets of working drawings showing details of construction affecting Railway Property and tracks. The working drawing must include the proposed method of installation and removal of falsework, shoring or cribbing, not included in the contract plans and two sets of structural calculations of any falsework, shoring or cribbing. For all excavation and shoring submittal plans, the current "BNSF-UPRR Guidelines for Temporary Shoring" must be used for determining the design loading conditions to be used in shoring design, and all calculations and submittals must be in accordance with the current "BNSF-UPRR Guidelines for Temporary Shoring". All submittal drawings and calculations must be stamped by a registered professional engineer licensed to practice in the state the project is located. All calculations must take into consideration railway surcharge loading and must be designed to meet American Railway Engineering and Maintenance-of-Way Association (previously known as American Railway Engineering Association) Coopers E-80 live loading standard. All drawings and calculations must be stamped by a registered professional engineer licensed to practice in the state the project is located. The Contractor must not begin C&M Work until notified by the Railway that plans have been approved, which approved plans shall become part of the Approved Plans. The Contractor will be required to use lifting devices such as, cranes and/or winches to place or to remove any falsework over Railway's tracks. In no case will the Contractor be relieved of responsibility for results obtained by the implementation of the Approved Plans.

- **1.01.10** Subject to the movement of Railway's trains, Railway will cooperate with the *Contractor such that the C&M Work may be handled and performed in an efficient manner.* The Contractor will have no claim whatsoever for any type of damages or for extra or additional compensation in the event his work is delayed by the Railway.

1.02 Contractor Safety Orientation

- **1.02.01 No employee of the Contractor, its subcontractors, agents or invitees may enter Railway Property without first having completed Railway's Engineering Contractor Safety Orientation, found on the web site www.contractororientation.com. The Contractor must ensure that each of its employees, subcontractors, agents or invitees completes Railway's Engineering Contractor Safety Orientation through internet sessions before any C&M Work is performed. Additionally, the Contractor must ensure that each and every one of its employees, subcontractors, agents or invitees possesses a card certifying completion of the Railway's Engineering Contractor Safety Orientation before entering Railway Property. The Contractor is responsible for the cost of the Railway's Engineering Contractor Safety Orientation. The Contractor must renew the Railway's Engineering Contractor Safety Orientation annually. Further clarification can be found on the web site or from the Railway's Project Engineer.**

1.03 Railway Requirements

- **1.03.01** The Contractor must take protective measures as are necessary to keep railway facilities, including track ballast, free of sand, debris, and other foreign objects and materials resulting from his operations. Any damage to railway facilities resulting from Contractor's

operations will be repaired or replaced by Railway and the cost of such repairs or replacement must be paid for by the Contractor.

- **1.03.02** The Contractor must notify Railway's Project Engineer, telephone number (402) 458-7537, and provide blasting plans to the Railway for review seven (7) calendar days prior to conducting any blasting operations adjacent to or on Railway Property.

- **1.03.03** The Contractor must abide by the following temporary clearances during construction:

  - 15' Horizontally from centerline of nearest track
  - 21'-6" Vertically above top of rail
  - 27'-0" Vertically above top of rail for electric wires carrying less than 750 volts
  - 28'-0" Vertically above top of rail for electric wires carrying 750 volts to 15,000 volts
  - 30'-0" Vertically above top of rail for electric wires carrying 15,000 volts to 20,000 volts
  - 34'-0" Vertically above top of rail for electric wires carrying more than 20,000 volts

- **1.03.04** Upon completion of construction, the following clearances shall be maintained:

  - 25' Horizontally from centerline of nearest existing or future track to the face of the pier or abutment structure
  - 31' Vertically above top of rail to the bottom of the Pedestrian Bridge

- **1.03.05** Any infringement within State statutory clearances due to the Contractor's operations must be submitted to the Railway and to the City and must not be undertaken until approved in writing by the Railway, and until the City has obtained any necessary authorization from the State Regulatory Authority for the infringement. No extra compensation will be allowed in the event the Contractor's C&M Work is delayed pending Railway approval, and/or the State Regulatory Authority's approval.

- **1.03.06** In the case of impaired vertical clearance above top of rail, Railway will have the option of installing tell-tales or other protective devices Railway deems necessary for protection of Railway operations. The cost of tell-tales or protective devices will be borne by the Contractor.

- **1.03.07** The details of construction affecting the Railway Property and tracks not included in the City Work Final Design or Approved Plans for the C&M Work must be submitted to the Railway by the City for approval before work is undertaken and this work must not be undertaken until approved by the Railway.

- **1.03.08** At other than public road crossings, the Contractor must not move any equipment or materials across Railway's tracks until permission has been obtained from the Railway. The Contractor must obtain a "Temporary Construction Crossing Agreement" from the Railway prior to moving his equipment or materials across Railway's tracks. The temporary crossing must be gated and locked at all times when not required for use by the Contractor. The temporary crossing for use of the Contractor will be constructed and, at the completion of the project, removed at the expense of the Contractor.

- **1.03.09** Discharge, release or spill on the Railway Property of any hazardous substances, oil, petroleum, constituents, pollutants, contaminants, or any hazardous waste is prohibited

and Contractor must immediately notify the Railway's Resource Operations Center at 1(800) 832-5452, of any discharge, release or spills in excess of a reportable quantity. Contractor must not allow Railway Property to become a treatment, storage or transfer facility as those terms are defined in the Resource Conservation and Recovery Act or any state analogue.

- **1.03.10** The Contractor, upon completion of the C&M Work, must promptly remove from the Railway Property all of Contractor's tools, equipment, implements and other materials, whether brought upon said Railway Property by Contractor or any subcontractor, employee or agent of Contractor or of any subcontractor, and must cause Railway Property to be left in a condition acceptable to Railway's Project Engineer.

1.04 Contractor Roadway Worker on Track Safety Program and Safety Action Plan

- **1.04.01** Each Contractor that will perform C&M Work within 25 feet of the centerline of a track must develop and implement a Roadway Worker Protection/On Track Safety Program and work with Railway's Project Engineer to develop an on track safety strategy as described in the guidelines listed in the on track safety portion of the Safety Orientation. This Program must provide Roadway Worker protection/on track training for all employees of the Contractor, its subcontractors, agents or invitees. This training is reinforced at the job site through job safety briefings. Additionally, each Contractor must develop and implement the Safety Action Plan, as provided for on the web site **www.contractororientation.com**, which will be made available to Railway prior to commencement of any work on Railway Property. During the performance of C&M Work, the Contractor must audit its C&M Work activities. The Contractor must designate an on-site Project Supervisor who will serve as the contact person for the Railway and who will maintain a copy of the Safety Action Plan, safety audits, and Material Safety Datasheets (MSDS), at the job site.

  Contractors shall ensure its employees, subcontractors and agents are United States citizens or legally working in this country under a work VISA.

1.05 Railway Flagger Services:

- **1.05.01** The Contractor must give Railway's Project Engineer, telephone number (402) 458-7537, a minimum of thirty (30) calendar days advance notice when flagging services will be required so that the Roadmaster can make appropriate arrangements (i.e., bulletin the flagger's position). If flagging services are scheduled in advance by the Contractor and it is subsequently determined by the parties hereto that such services are no longer necessary, the Contractor must give the Roadmaster five (5) working days advance notice so that appropriate arrangements can be made to abolish the position pursuant to union requirements.

- **1.05.02** Unless determined otherwise by Railway's Project Engineer, Railway flagger will be required and furnished when Contractor's C&M Work activities are located over, under and/or within twenty-five (25) feet measured horizontally from centerline of the nearest track and when cranes or similar equipment positioned beyond 25-feet from the track centerline could foul the track in the event of tip over or other catastrophic occurrence, but not limited thereto for the following conditions:

- **1.05.02a** When, upon inspection by Railway's Project Engineer, other conditions warrant.

- **1.05.02b** When any excavation is performed below the bottom of tie elevation, if, in the opinion of Railway's Project Engineer, track or other Railway facilities may be subject to movement or settlement.

- **1.05.02c** When C&M Work in any way interferes with the safe operation of trains at timetable speeds.

- **1.05.02d** When any hazard is presented to Railway track, communications, signal, electrical, or other facilities either due to persons, material, equipment or blasting in the vicinity.

- **1.05.02e** Special permission must be obtained from the Railway before moving heavy or cumbersome objects or equipment which might result in making the track impassable.

- **1.05.03** Flagging services will be performed by qualified Railway flaggers.

- **1.05.03a** Flagging crew generally consists of one employee. However, additional personnel may be required to protect Railway Property and operations, if deemed necessary by Railway's Project Engineer.

- **1.05.03b** Each time a flagger is called, the minimum period for billing will be the eight (8) hour basic day.

- **1.05.03c** The cost of flagger services provided by the Railway will be borne by City. The estimated cost for one (1) flagger is approximately between $800.00-$1,600.00 for an eight (8) hour basic day with time and one-half or double time for overtime, rest days and holidays. The estimated cost for each flagger includes vacation allowance, paid holidays, Railway and unemployment insurance, public liability and property damage insurance, health and welfare benefits, vehicle, transportation, meals, lodging, radio, equipment, supervision and other costs incidental to performing flagging services. Negotiations for Railway labor or collective bargaining agreements and rate changes authorized by appropriate Federal authorities may increase actual or estimated flagging rates. **THE GOVERNMENTAL FLAGGING RATE IN EFFECT AT THE TIME OF PERFORMANCE BY THE CONTRACTOR HEREUNDER WILL BE USED TO CALCULATE THE ACTUAL COSTS OF FLAGGING PURSUANT TO THIS PARAGRAPH.**

- **1.05.03d** The average train traffic on this route is 65 freight trains per 24-hour period at a timetable speed of 40 MPH and 2 passenger trains at a timetable speed of 15 MPH.

1.06 Contractor General Safety Requirements

- **1.06.01 C&M Work in the proximity of railway track(s) is potentially hazardous where movement of trains and equipment can occur at any time and in any direction. All work performed by contractors within 25 feet of any track must be in compliance with FRA Roadway Worker Protection Regulations. No Contractor shall conduct any tests, investigations or any other activity using mechanized equipment and/or machinery, or place or store any mechanized equipment, tools or other materials, within twenty-five (25) feet of the centerline of any railroad track on Railway Property, except after Contractor has obtained written approval from Railway Director Engineering Services, and then only in strict accordance with the terms and any conditions of such approval.**

- **1.06.02 Before beginning any task on Railway Property, a thorough job safety briefing must be conducted with all personnel involved with the task and repeated when the**

personnel or task changes. If the task is within 25 feet of any track, the job briefing must include the Railway's flagger, as applicable, and include the procedures the Contractor will use to protect its employees, subcontractors, agents or invitees from moving any equipment adjacent to or across any Railway track(s).

- **1.06.03 Workers must not work within 25 feet of the centerline of any track without an on track safety strategy approved by Railway's Project Engineer. When authority is provided, every contractor employee must know: (1) who the Railway flagger is, and how to contact the flagger, (2) limits of the authority, (3) the method of communication to stop and resume work, and (4) location of the designated places of safety. Persons or equipment entering flag/work limits that were not previously job briefed, must notify the flagger immediately, and be given a job briefing when working within 25 feet of the center line of track.**

- **1.06.04 When Contractor employees are required to work on Railway Property after normal working hours or on weekends, Railway's Project Engineer must be notified. A minimum of two employees must be present at all times.**

- **1.06.05** Any employees, agents or invitees of Contractor or its subcontractors under suspicion of being under the influence of drugs or alcohol, or in the possession of same, will be removed from the Railway Property and subsequently released to the custody of a representative of Contractor management. Future access to the Railway Property by that employee will be denied.

- **1.06.06** Any damage to Railway Property, or any hazard noticed on passing trains must be reported immediately to the Railway's Project Engineer. Any vehicle or machine which may come in contact with track, signal equipment, or structure (bridge) and could result in a train derailment must be reported immediately to the Railway's Project Engineer and to the Railway's Resource Operations Center at 1 (800) 832-5452. Local emergency numbers are to be obtained from Railway's Project Engineer prior to the start of any C&M Work and must be posted at the job site.

- **1.06.07** For safety reasons, all persons are prohibited from having pocket knives, firearms or other deadly weapons in their possession while working on Railway Property.

- **1.06.08** All personnel protective equipment (PPE) used on Railway Property must meet applicable OSHA and ANSI specifications. Current Railway personnel protective equipment requirements are listed on the web site, **www.contractororientation.com,** however, a partial list of the requirements include: a) safety glasses with permanently affixed side shields (no yellow lenses); b) hard hats c) safety shoe with: hardened toes, above-the-ankle lace-up and a defined heel; and d) high visibility retro-reflective work wear. The Railway's Project Engineer is to be contacted regarding local specifications for meeting requirements relating to hi-visibility work wear. Hearing protection, fall protection, gloves, and respirators must be worn as required by State and Federal regulations. **(NOTE – Should there be a discrepancy between the information contained on the web site and the information in this paragraph, the web site will govern.)**

- **1.06.09 THE CONTRACTOR MUST NOT PILE OR STORE ANY MATERIALS, MACHINERY OR EQUIPMENT CLOSER THAN 25'-0" TO THE CENTER LINE OF THE NEAREST RAILWAY TRACK. MATERIALS, MACHINERY OR EQUIPMENT MUST NOT BE STORED OR LEFT WITHIN 250 FEET OF ANY HIGHWAY/RAIL AT-GRADE CROSSINGS OR TEMPORARY CONSTRUCTION CROSSING, WHERE STORAGE OF**

THE SAME WILL OBSTRUCT THE VIEW OF A TRAIN APPROACHING THE CROSSING. PRIOR TO BEGINNING WORK, THE CONTRACTOR MUST ESTABLISH A STORAGE AREA WITH CONCURRENCE OF THE RAILWAY'S PROJECT ENGINEER.

- **1.06.10** Machines or vehicles must not be left unattended with the engine running. Parked machines or equipment must be in gear with brakes set and if equipped with blade, pan or bucket, they must be lowered to the ground. All machinery and equipment left unattended on Railway Property must be left inoperable and secured against movement. (See internet Engineering Contractor Safety Orientation program for more detailed specifications)

- **1.06.11** Workers must not create and leave any conditions at the work site that would interfere with water drainage. Any C&M Work performed over water must meet all Federal, State and Local regulations.

- **1.06.12** All power line wires must be considered dangerous and of high voltage unless informed to the contrary by proper authority. For all power lines the minimum clearance between the lines and any part of the equipment or load must be; 200 KV or below - 15 feet; 200 to 350 KV - 20 feet; 350 to 500 KV - 25 feet; 500 to 750 KV - 35 feet; and 750 to 1000 KV - 45 feet. If capacity of the line is not known, a minimum clearance of 45 feet must be maintained. A person must be designated to observe clearance of the equipment and give a timely warning for all operations where it is difficult for an operator to maintain the desired clearance by visual means.

1.07 Excavation

- **1.07.01** Before excavating, the Contractor must determine whether any underground pipe lines, electric wires, or cables, including fiber optic cable systems are present and located within the C&M Work area. The Contractor must determine whether excavation on Railway Property could cause damage to buried cables resulting in delay to Railway traffic and disruption of service to users. Delays and disruptions to service may cause business interruptions involving loss of revenue and profits. Before commencing excavation, the Contractor must contact Railway's Project Engineer, telephone number (402) 458-7537. All underground and overhead wires will be considered HIGH VOLTAGE and dangerous until verified with the company having ownership of the line. **It is the Contractor's responsibility to notify any other companies that have underground utilities in the area and arrange for the location of all underground utilities before excavating.**

- **1.07.02** The Contractor must cease all work and notify Railway immediately before continuing excavation in the area if obstructions are encountered which do not appear on drawings. If the obstruction is a utility and the owner of the utility can be identified, then the Contractor must also notify the owner immediately. If there is any doubt about the location of underground cables or lines of any kind, no work must be performed until the exact location has been determined. There will be no exceptions to these instructions.

- **1.07.03** All excavations must be conducted in compliance with applicable OSHA regulations and, regardless of depth, must be shored where there is any danger to tracks, structures or personnel.

- **1.07.04** Any excavations, holes or trenches on Railway Property must be covered, guarded and/or protected when not being worked on. When leaving work site areas at night and over weekends, the areas must be secured and left in a condition that will ensure that Railway

employees and other personnel who may be working or passing through the area are protected from all hazards. All excavations must be back filled as soon as possible.

- **1.07.05** Contractor will be responsible at no cost to Railway to locate and make any adjustments necessary to any wire lines, pipe lines, or other utilities, fences, buildings, improvements or other facilities located within Railway Property (collectively, "**Other Improvements**"). Contractor must contact the owner(s) of the Other Improvements notifying them of any work that may damage these Other Improvements and/or interfere with their service and, if required, obtain the owner's written approval prior to so affecting the Other Improvements. Contractor must mark all Railway improvements and Other Improvements on the applicable Approved Plans or other plans and specifications approved in advance by Railway, and mark all Railway improvements and Other Improvements in the field in order to verify their locations. Contractor must also use all reasonable methods when working on or near Railway Property to determine if any Railway improvements or Other Improvements (fiber optic, cable, communication or otherwise) may exist. Failure to mark or identify any Railway improvements or Other Improvements will be sufficient cause for Railway to stop construction at no cost to Railway until such items are completed. Contractor must make all adjustments and other work described in this Section 1.07.05, including without limitation adjustments to Other Improvements and work on and affecting Railway Property, in a manner that does not adversely impact utility service to Railway.

1.08 Hazardous Waste, Substances and Material Reporting

- **1.08.01** If Contractor discovers any hazardous waste, hazardous substance, petroleum or other deleterious material, including but not limited to any non-containerized commodity or material, on or adjacent to Railway Property, in or near any surface water, swamp, wetlands or waterways, while performing any work under this Agreement, Contractor must immediately: (a) notify the Railway's Resource Operations Center at 1 (800) 832-5452, of such discovery: (b) take safeguards necessary to protect its employees, subcontractors, agents and/or third parties: and (c) exercise due care with respect to the release, including the taking of any appropriate measure to minimize the impact of such release.

1.09 Personal Injury Reporting

- **1.09.01** The Railway is required to report certain injuries as a part of compliance with Federal Railroad Administration (FRA) reporting requirements. Any personal injury sustained by an employee of the Contractor, subcontractor or Contractor's invitees while on the Railway Property must be reported immediately (by phone mail if unable to contact in person) to the Railway's Project Engineer. The Non-Employee Personal Injury Data Collection Form contained herein is to be completed and sent by Fax to the Railway at 1 (817) 352-7595 and to the Railway's Project Engineer no later than the close of shift on the date of the injury.

NON-EMPLOYEE PERSONAL INJURY DATA COLLECTION

INFORMATION REQUIRED TO BE COLLECTED PURSUANT TO FEDERAL REGULATION. IT SHOULD BE USED FOR COMPLIANCE WITH FEDERAL REGULATIONS ONLY AND IS NOT INTENDED TO PRESUME ACCEPTANCE OF RESPONSIBILITY OR LIABILITY.

1. Accident City/St
2. Date: _____ Time: _____ County:
3. Temperature:
4. Weather
   (if non-Railway location)

5. Social Security #

6. Name (last, first, mi)

7. Address: Street: _____ City: St._____ Zip:

8. Date of Birth: _____ and/or Age _____ Gender:
   (if available)

9. (a) Injury: _____ (b) Body Part:
   (i.e. (a) Laceration (b) Hand)

11. Description of Accident (To include location, action, result, etc.):

12. Treatment:
    __ First Aid Only
    __ Required Medical Treatment
    __ Other Medical Treatment

13. Dr. Name _____ 30. Date: _____

14. Dr. Address:
    Street: _____ City: _____ St: _____ Zip: _____

15. Hospital Name:

16. Hospital Address:
    Street: _____ City: _____ St: _____ Zip: _____

17. Diagnosis:

FAX TO RAILWAY AT (817) 352-7595
AND COPY TO RAILWAY ROADMASTER FAX

EXHIBIT C-1(A)

CONTRACTOR'S RIGHT OF ENTRY
For C&M Work

BNSF RAILWAY COMPANY
Attention: Project Engineer

Gentlemen:

The undersigned (hereinafter, the "**Contractor**"), has entered into a contract (the "**Contract**") dated _____, 20_ with the City of Lincoln, Nebraska ("**City**") for the performance of certain work ("**C&M Work**") in connection with the construction of entertainment, recreation, lodging, offices, retail and/or other complementary and/or supporting facilities in Lincoln, Nebraska (collectively, the "**West Haymarket Project**"). The work to be performed under this Agreement is deemed to be "City C&M Work" (as defined in that certain Construction and Maintenance Agreement ["**C&M Agreement**"] dated _____, 2010, between BNSF Railway Company and the City). Performance of such C&M Work will necessarily require Contractor to enter BNSF RAILWAY COMPANY ("**Railway**") right of way and property ("**Railway Property**"). The Contract provides that no C&M Work will be commenced within Railway Property until the Contractor employed in connection with said C&M Work for the **City of Lincoln, Nebraska** (i) executes and delivers to Railway an Agreement in the form hereof, and (ii) provides insurance of the coverage and limits specified in such Agreement and Section 3 herein. If this Agreement is executed by a party who is not the Owner, General Partner, President or Vice President of Contractor, Contractor must furnish evidence to Railway certifying that the signatory is empowered to execute this Agreement on behalf of Contractor.

Accordingly, in consideration of Railway granting permission to Contractor to enter upon Railway Property and as an inducement for such entry, Contractor, effective on the date of the Contract, has agreed and does hereby agree with Railway as follows:

Section 1. RELEASE OF LIABILITY AND INDEMNITY

TO THE FULLEST EXTENT PERMITTED BY LAW, CONTRACTOR SHALL RELEASE, INDEMNIFY, DEFEND AND HOLD HARMLESS RAILWAY AND RAILWAY'S AFFILIATED COMPANIES, PARTNERS, SUCCESSORS, ASSIGNS, LEGAL REPRESENTATIVES, OFFICERS, DIRECTORS, SHAREHOLDERS, EMPLOYEES AND AGENTS FOR, FROM AND AGAINST ANY AND ALL CLAIMS, LIABILITIES, FINES, PENALTIES, COSTS, DAMAGES, LOSSES, LIENS, CAUSES OF ACTION, SUITS, DEMANDS, JUDGMENTS AND EXPENSES (INCLUDING, WITHOUT LIMITATION, COURT COSTS AND ATTORNEYS' FEES) OF ANY NATURE, KIND OR DESCRIPTION OF ANY PERSON (INCLUDING, WITHOUT LIMITATION, THE EMPLOYEES OF THE PARTIES HERETO) OR ENTITY DIRECTLY OR INDIRECTLY (COLLECTIVELY, "LIABILITIES") ARISING OUT OF, RESULTING FROM OR CAUSALLY RELATED TO (IN WHOLE OR IN PART):

(i) ANY RIGHTS OR INTERESTS GRANTED TO CONTRACTOR PURSUANT TO THIS AGREEMENT;

(ii) THE USE, OCCUPANCY OR PRESENCE OF CONTRACTOR AND CONTRACTOR PARTIES (DEFINED BELOW) AND/OR ANY WORK PERFORMED BY CONTRACTOR AND CONTRACTOR PARTIES IN, ON, OR ABOUT RAILWAY'S PROPERTY OR RIGHT-OF-WAY AND/OR THE WEST HAYMARKET PROJECT, INCLUDING, WITHOUT LIMITATION, OPERATION OF THE PEDESTRIAN BRIDGE, SECURITY FENCING, OR STORM WATER MITIGATION BY ANY CONTRACTOR PARTY (DEFINED BELOW);

(iii) ANY ENVIRONMENTAL MATTERS ARISING FROM CONTRACTOR AND/OR CONTRACTOR PARTIES' USE AND OCCUPANCY OF RAILWAY'S RIGHT-OF-WAY OR OTHER RAILWAY PROPERTY, INCLUDING WITHOUT LIMITATION USE AND OCCUPANCY OF RAILWAY'S RIGHT-OF-WAY OR OTHER RAILWAY PROPERTY IN CONNECTION WITH PERFORMANCE OF THE C&M WORK;

(iv) ANY DAMAGE TO OR DESTRUCTION OF ANY TELECOMMUNICATION LINES IN CONNECTION WITH THE WEST HAYMARKET PROJECT BY CONTRACTOR AND/OR CONTRACTOR PARTIES, INCLUDING BUT NOT LIMITED TO (A) ANY INJURY TO OR DEATH OF ANY PERSON EMPLOYED BY OR ON BEHALF OF ANY TELECOMMUNICATIONS COMPANY, AND/OR ITS CONTRACTORS, AGENTS AND/OR EMPLOYEES AS A RESULT OF SUCH DAMAGE OR DESTRUCTION, AND/OR (B) ANY CLAIM OR CAUSE OF ACTION FOR ALLEGED LOSS OF PROFITS OR REVENUE BY, OR LOSS OF SERVICE BY A CUSTOMER OR USER OF SUCH TELECOMMUNICATION COMPANY(IES) AS A RESULT OF SUCH DAMAGE OR DESTRUCTION;

(v) CONTRACTOR'S BREACH OF THE TERMS AND CONDITIONS OF THIS AGREEMENT; OR

(vi) ANY ACT OR OMISSION OF CONTRACTOR OR ITS OFFICERS, AGENTS, INVITEES, EMPLOYEES OR SUBCONTRACTORS (SUCH OFFICERS, AGENTS, INVITEES, EMPLOYEES AND SUBCONTRACTORS BEING REFERRED TO HEREIN INDIVIDUALLY AS A "CONTRACTOR PARTY" AND COLLECTIVELY, "CONTRACTOR PARTIES"), OR ANYONE DIRECTLY OR INDIRECTLY EMPLOYED BY ANY OF THEM, OR ANYONE THEY CONTROL OR EXERCISE CONTROL OVER.

THE LIABILITY ASSUMED BY CONTRACTOR WILL NOT BE AFFECTED BY THE FACT, IF IT IS A FACT, THAT ANY DAMAGE, DESTRUCTION, INJURY OR DEATH WAS OCCASIONED BY OR CONTRIBUTED TO BY THE NEGLIGENCE OF RAILWAY, ITS AGENTS, SERVANTS, EMPLOYEES OR OTHERWISE, BUT EXCLUDING CLAIMS WHOLLY CAUSED BY RAILWAY'S SOLE NEGLIGENCE AND EXCLUDING CLAIMS TO THE EXTENT THAT SUCH CLAIMS ARE CAUSED BY THE WILLFUL MISCONDUCT OR GROSS NEGLIGENCE OF RAILWAY.

FURTHER, TO THE FULLEST EXTENT PERMITTED BY LAW, CONTRACTOR AGREES, REGARDLESS OF ANY NEGLIGENCE OR ALLEGED NEGLIGENCE OF RAILWAY, TO INDEMNIFY, DEFEND AND HOLD HARMLESS RAILWAY AGAINST AND ASSUME THE DEFENSE OF ANY LIABILITIES ASSERTED AGAINST OR SUFFERED BY RAILWAY UNDER OR RELATED TO THE FEDERAL EMPLOYERS' LIABILITY ACT ("FELA") WHENEVER EMPLOYEES OF CONTRACTOR OR ANY CONTRACTOR PARTY CLAIM OR ALLEGE THAT THEY ARE EMPLOYEES OF RAILWAY OR OTHERWISE. THIS INDEMNITY SHALL ALSO EXTEND, ON THE SAME BASIS, TO FELA CLAIMS BASED ON ACTUAL OR ALLEGED VIOLATIONS OF ANY FEDERAL, STATE OR LOCAL LAWS OR REGULATIONS, INCLUDING BUT NOT LIMITED TO THE SAFETY APPLIANCE ACT, THE LOCOMOTIVE INSPECTION ACT, THE OCCUPATIONAL SAFETY AND HEALTH ACT, THE RESOURCE

CONSERVATION AND RECOVERY ACT, AND ANY SIMILAR STATE OR FEDERAL STATUTE.

Contractor further agrees, at its expense, in the name and on behalf of Railway, that it will adjust and settle all Liabilities against Railway, and will, at Railway's discretion, appear and defend any suits or actions of law or in equity brought against Railway on any claim or cause of action arising out of any liability assumed by Contractor under this Agreement for which Railway is liable or is alleged to be liable. Railway will give notice to Contractor, in writing, of the receipt or dependency of such claims and thereupon Contractor must proceed to adjust and handle to a conclusion such claims, and in the event of a suit being brought against Railway, Railway may forward summons and complaint or other process in connection therewith to Contractor, and Contractor, at Railway's discretion, must defend, adjust, or settle such suits and protect, indemnify, and save harmless Railway from and against all Liabilities arising out of any such claims or suits, provided that the foregoing indemnification obligations do not include Liabilities arising wholly out of the sole negligence of Railway or to the extent caused by the gross negligence or willful misconduct of Railway.

In addition to any other provision of this Agreement, in the event that all or any portion of this Article shall be deemed to be inapplicable for any reason, including without limitation as a result of a decision of an applicable court, legislative enactment or regulatory order, the parties agree that this Article shall be interpreted as requiring Contractor to indemnify Railway to the fullest extent permitted by applicable law. **THROUGH THIS AGREEMENT THE PARTIES EXPRESSLY INTEND FOR CONTRACTOR TO INDEMNIFY RAILWAY FOR RAILWAY'S ACTS OF NEGLIGENCE, BUT EXCLUDING CLAIMS WHOLLY CAUSED BY RAILWAY'S SOLE NEGLIGENCE AND EXCLUDING CLAIMS TO THE EXTENT THAT SUCH CLAIMS ARE CAUSED BY THE WILLFUL MISCONDUCT OR GROSS NEGLIGENCE OF RAILWAY.**

It is mutually understood and agreed that the assumption of liabilities and indemnification provided for in this Agreement survive any termination of this Agreement.

Section 2. TERM

This Agreement is effective from the date of the Contract until (i) the completion of the project set forth herein, and (ii) full and complete payment to Railway of any and all sums or other amounts owing and due hereunder.

Section 3. INSURANCE

Contractor must, at its sole cost and expense, procure and maintain during the life of this Agreement the following insurance coverage:

A. Commercial General Liability Insurance. This insurance shall contain broad form contractual liability with a combined single limit of a minimum of $5,000,000.00 per occurrence, and $10,000,000.00 in the aggregate, but in no event less than the amount otherwise carried by the Contractor. Coverage must be purchased on a post 1998 ISO occurrence form or equivalent and include coverage for, but not limited to, the following:
    - Bodily Injury and Property Damage
    - Personal Injury and Advertising Injury
    - Fire legal liability
    - Products and completed operations

This policy shall also contain the following endorsements, which shall be indicated on the certificate of insurance:

- The definition of insured contract shall be amended to remove any exclusion or other limitation for any work being done within 50 feet of railroad property.
- Waiver of subrogation in favor of and acceptable to Railroad.
- Additional insured endorsement in favor of and acceptable to Railroad.
- Separation of insureds.
- The policy shall be primary and non-contributing with respect to any insurance carried by Railroad.

It is agreed that the workers' compensation and employers' liability related exclusions in the Commercial General Liability insurance policy(s) required herein are intended to apply to employees of the policy holder and shall not apply to Railroad employees.

No other endorsements limiting coverage as respects obligations under this Agreement may be included on the policy with regard to the work being performed under this Agreement.

B. Business Automobile Insurance. This insurance shall contain a combined single limit of at least $1,000,000 per occurrence, and include coverage for, but not limited to the following:

- Bodily injury and property damage
- Any and all vehicles owned, used or hired

This policy shall also contain the following endorsements or language, which shall be indicated on the certificate of insurance:

- Waiver of subrogation in favor of and acceptable to Railroad.
- Additional insured endorsement in favor or and acceptable to Railroad.
- Separation of insureds.
- The policy shall be primary and non-contributing with respect to any insurance carried by Railroad.

C. Workers Compensation and Employers Liability Insurance. This insurance shall include coverage for, but not limited to:

- Contractor's statutory liability under the worker's compensation laws of the state(s) in which the work is to be performed. If optional under State law, the insurance must cover all employees anyway.
- Employers' Liability (Part B) with limits of at least $500,000 each accident, $500,000 by disease policy limit, $500,000 by disease each employee.

This policy shall also contain the following endorsements or language, which shall be indicated on the certificate of insurance:

- Waiver of subrogation in favor of and acceptable to Railroad.

D. Railroad Protective Liability Insurance. This insurance shall name only the Railroad as the Insured with coverage of at least $5,000,000 per occurrence and $10,000,000 in the aggregate. The policy shall be issued on a standard ISO form CG 00 35 10 93 and include the following:

- Endorsed to include the Pollution Exclusion Amendment (ISO form CG 28 31 10 93)
- Endorsed to include the Limited Seepage and Pollution Endorsement.

- Endorsed to remove any exclusion for punitive damages.
- No other endorsements restricting coverage may be added.
- The original policy must be provided to Railroad prior to performing any work or services under this Agreement

In lieu of providing a Railroad Protective Liability Policy, Contractor may participate in BNSF's Blanket Railroad Protective Liability Insurance Policy available to Contractor.

Other Requirements:

All policies (applying to coverage listed above) must not contain an exclusion for punitive damages and certificates of insurance must reflect that no exclusion exists.

Contractor agrees to waive its right of recovery against Railroad for all claims and suits against Railroad, except for claims and suits arising wholly out of the sole negligence, or to the extent caused by the gross negligence or willful misconduct, of Railroad. In addition, its insurers, through the terms of the policy or policy endorsement, waive their right of subrogation against Railroad for all claims and suits, except for claims and suits arising wholly out of the sole negligence, or to the extent caused by the gross negligence of willful misconduct, of Railroad. The certificate of insurance must reflect the waiver of subrogation endorsement. Contractor further waives its right of recovery, and its insurers also waive their right of subrogation against Railroad for loss of its owned or leased property or property under Contractor's care, custody or control, except for the right of recovery or right of subrogation arising wholly out of the sole negligence, or to the extent caused by the gross negligence or willful misconduct, of Railroad.

Contractor is not allowed to self-insure without the prior written consent of Railroad. If granted by Railroad, any deductible, self-insured retention or other financial responsibility for claims must be covered directly by Contractor in lieu of insurance. Any and all Railroad liabilities that would otherwise, in accordance with the provisions of this Agreement, be covered by Contractor's insurance will be covered as if Contractor elected not to include a deductible, self-insured retention or other financial responsibility for claims.

Prior to commencing the C&M Work, Contractor must furnish to Railroad acceptable certificate(s) of insurance including an original signature of the authorized representative evidencing the required coverage, endorsements, and amendments. The policy(ies) must contain a provision that obligates the insurance company(ies) issuing such policy(ies) to notify Railroad in writing at least 30 days prior to any cancellation, non-renewal, substitution or material alteration. This cancellation provision must be indicated on the certificate of insurance. Upon request from Railroad, a certified duplicate original of any required policy must be furnished. Certificate(s) should be sent to the following address:

Ebix BPO
PO Box 12010-BN
Hemet, CA 92546-8010
Fax number: 951-652-2882
Email: bnsf@ebix.com

Any insurance policy must be written by a reputable insurance company reasonably acceptable to Railroad or with a current Best's Guide Rating of A- and Class VII or better, and authorized to do business in the state(s) in which the service is to be provided.

Contractor represents that this Agreement has been thoroughly reviewed by Contractor's insurance agent(s)/broker(s), who have been instructed by Contractor to procure the insurance coverage required by this Agreement. Allocated Loss Expense must be in addition to all policy limits for coverages referenced above.

Not more frequently than once every five years, Railroad may reasonably modify the required insurance coverage to reflect then-current risk management practices in the railroad industry and underwriting practices in the insurance industry.

If any portion of the operation is to be subcontracted by Contractor, Contractor must require that its subcontractors provide and maintain the insurance coverages set forth herein, naming Railroad as an additional insured, and requiring that the subcontractors release, defend and indemnify Railroad to the same extent and under the same terms and conditions as Contractor is required to release, defend and indemnify Railroad herein.

Failure to provide evidence as required by this section will entitle, but not require, Railroad to immediately suspend work under this Agreement until such evidence is provided. Acceptance of a certificate that does not comply with this section will not operate as a waiver of Contractor's obligations hereunder.

The fact that insurance (including, without limitation, self-insurance) is obtained by Contractor will not be deemed to release or diminish the liability of Contractor including, without limitation, liability under the indemnity provisions of this Agreement. Damages recoverable by Railroad will not be limited by the amount of the required insurance coverage.

For purposes of this section, Railroad means "Burlington Northern Santa Fe, LLC", "BNSF Railway Company" and the subsidiaries, successors, assigns and affiliates of each.

Section 4. EXHIBIT C CONTRACTOR REQUIREMENTS

The Contractor must observe and comply with all provisions, obligations, requirements and limitations contained in the Contract, and the Contractor Requirements set forth on Exhibit C attached to this Agreement and the Contract, including, but not be limited to, payment of all costs incurred for any damages to Railway roadbed, tracks, and/or appurtenances thereto, resulting from use, occupancy, or presence of its employees, representatives, or agents or subcontractors on or about the construction site.

Section 5. TRAIN DELAY

Contractor is responsible for and hereby indemnifies and holds harmless Railway (including its affiliated railway companies, and its tenants) for, from and against all damages arising from any unscheduled delay to a freight or passenger train which affects Railway's ability to fully utilize its equipment and to meet customer service and contract obligations. Contractor will be billed, as further provided below, for the economic losses arising from loss of use of equipment, contractual loss of incentive pay and bonuses and contractual penalties resulting from train delays, whether caused by Contractor, or subcontractors, or by the Railway performing work under this Agreement. Railway agrees that it will not perform any act to unnecessarily cause train delay.

For loss of use of equipment, Contractor will be billed the current freight train hour rate per train as determined from Railway's records. Any disruption to train traffic may cause delays to multiple trains at the same time for the same period.

Additionally, the parties acknowledge that passenger, U.S. mail trains and certain other grain, intermodal, coal and freight trains operate under incentive/penalty contracts between Railway and its customer(s). Under these arrangements, if Railway does not meet its contract service commitments, Railway may suffer loss of performance or incentive pay and/or be subject to penalty payments. Contractor is responsible for any train performance and incentive penalties or other contractual economic losses actually incurred by Railway which are attributable to a train delay caused by Contractor or its subcontractors.

The contractual relationship between Railway and its customers is proprietary and confidential. In the event of a train delay covered by this Agreement, Railway will share information relevant to any train delay to the extent consistent with Railway confidentiality obligations. Damages for train delay are currently $382.20 per hour per incident. **THE RATE THEN IN EFFECT AT THE TIME OF PERFORMANCE BY THE CONTRACTOR HEREUNDER WILL BE USED TO CALCULATE THE ACTUAL COSTS OF TRAIN DELAY PURSUANT TO THIS AGREEMENT.**

Contractor and its subcontractors must give Railway's Project Engineer (402) 458-7537 thirty (30) days' minimum advance notice of the times and dates for proposed work windows. Railway and Contractor will establish mutually agreeable work windows for the project. Railway has the right at any time to revise or change the work windows due to train operations or service obligations. Railway will not be responsible for any additional costs or expenses resulting from a change in work windows. Additional costs or expenses resulting from a change in work windows shall be accounted for in Contractor's expenses for the project.

Contractor and subcontractors must plan, schedule, coordinate and conduct all Contractor's work so as to not cause any delays to any trains.

[Signature page follows]

Kindly acknowledge receipt of this letter by signing and returning to the Railway two original copies of this letter, which, upon execution by Railway, will constitute an Agreement between us.

_____	
(Contractor)	**BNSF Railway Company**
By:_____	By:_____
Printed Name: _____	Name:_____
Title:_____	*Project Engineer*
Contact Person: _____	Accepted and effective this _____day of 20__.
Address: _____	
_____	
City:_____ State:___ Zip:____	
Fax: _____	
Phone: _____	
E-mail:_____	

EXHIBIT C-1(B)

CONTRACTOR'S RIGHT OF ENTRY
For C&M Work

BNSF RAILWAY COMPANY
Attention: Project Engineer

Gentlemen:

The undersigned (hereinafter, the "**Contractor**"), has entered into a contract (the "**Contract**") dated _____, 20_ with the City of Lincoln, Nebraska ("**City**") for the performance of certain work ("**C&M Work**") in connection with the construction of entertainment, recreation, lodging, offices, retail and/or other complementary and/or supporting facilities in Lincoln, Nebraska (collectively, the "**West Haymarket Project**"). The work to be performed under this Agreement is deemed to be "City C&M Work" (as defined in that certain Construction and Maintenance Agreement ["**C&M Agreement**"] dated _____, 2010, between BNSF Railway Company and the City). Performance of such C&M Work will necessarily require Contractor to enter BNSF RAILWAY COMPANY ("**Railway**") right of way and property ("**Railway Property**"). The Contract provides that no C&M Work will be commenced within Railway Property until the Contractor employed in connection with said C&M Work for the **City of Lincoln, Nebraska** (i) executes and delivers to Railway an Agreement in the form hereof, and (ii) provides insurance of the coverage and limits specified in such Agreement and Section 3 herein. If this Agreement is executed by a party who is not the Owner, General Partner, President or Vice President of Contractor, Contractor must furnish evidence to Railway certifying that the signatory is empowered to execute this Agreement on behalf of Contractor.

Accordingly, in consideration of Railway granting permission to Contractor to enter upon Railway Property and as an inducement for such entry, Contractor, effective on the date of the Contract, has agreed and does hereby agree with Railway as follows:

Section 1. RELEASE OF LIABILITY AND INDEMNITY

TO THE FULLEST EXTENT PERMITTED BY LAW, CONTRACTOR SHALL RELEASE, INDEMNIFY, DEFEND AND HOLD HARMLESS RAILWAY AND RAILWAY'S AFFILIATED COMPANIES, PARTNERS, SUCCESSORS, ASSIGNS, LEGAL REPRESENTATIVES, OFFICERS, DIRECTORS, SHAREHOLDERS, EMPLOYEES AND AGENTS FOR, FROM AND AGAINST ANY AND ALL CLAIMS, LIABILITIES, FINES, PENALTIES, COSTS, DAMAGES, LOSSES, LIENS, CAUSES OF ACTION, SUITS, DEMANDS, JUDGMENTS AND EXPENSES (INCLUDING, WITHOUT LIMITATION, COURT COSTS AND ATTORNEYS' FEES) OF ANY NATURE, KIND OR DESCRIPTION OF ANY PERSON (INCLUDING, WITHOUT LIMITATION, THE EMPLOYEES OF THE PARTIES HERETO) OR ENTITY DIRECTLY OR INDIRECTLY (COLLECTIVELY, "LIABILITIES") ARISING OUT OF, RESULTING FROM OR CAUSALLY RELATED TO (IN WHOLE OR IN PART):

(i) ANY RIGHTS OR INTERESTS GRANTED TO CONTRACTOR PURSUANT TO THIS AGREEMENT;

(ii) THE USE, OCCUPANCY OR PRESENCE OF CONTRACTOR AND CONTRACTOR PARTIES (DEFINED BELOW) AND/OR ANY WORK PERFORMED BY CONTRACTOR AND CONTRACTOR PARTIES IN, ON, OR ABOUT RAILWAY'S PROPERTY OR RIGHT-OF-WAY AND/OR THE WEST HAYMARKET PROJECT, INCLUDING, WITHOUT LIMITATION, OPERATION OF THE PEDESTRIAN BRIDGE, SECURITY FENCING, OR STORM WATER MITIGATION BY ANY CONTRACTOR PARTY (DEFINED BELOW);

(iii) ANY ENVIRONMENTAL MATTERS ARISING FROM CONTRACTOR AND/OR CONTRACTOR PARTIES' USE AND OCCUPANCY OF RAILWAY'S RIGHT-OF-WAY OR OTHER RAILWAY PROPERTY, INCLUDING WITHOUT LIMITATION USE AND OCCUPANCY OF RAILWAY'S RIGHT-OF-WAY OR OTHER RAILWAY PROPERTY IN CONNECTION WITH PERFORMANCE OF THE C&M WORK;

(iv) ANY DAMAGE TO OR DESTRUCTION OF ANY TELECOMMUNICATION LINES IN CONNECTION WITH THE WEST HAYMARKET PROJECT BY CONTRACTOR AND/OR CONTRACTOR PARTIES, INCLUDING BUT NOT LIMITED TO (A) ANY INJURY TO OR DEATH OF ANY PERSON EMPLOYED BY OR ON BEHALF OF ANY TELECOMMUNICATIONS COMPANY, AND/OR ITS CONTRACTORS, AGENTS AND/OR EMPLOYEES AS A RESULT OF SUCH DAMAGE OR DESTRUCTION, AND/OR (B) ANY CLAIM OR CAUSE OF ACTION FOR ALLEGED LOSS OF PROFITS OR REVENUE BY, OR LOSS OF SERVICE BY A CUSTOMER OR USER OF SUCH TELECOMMUNICATION COMPANY(IES) AS A RESULT OF SUCH DAMAGE OR DESTRUCTION;

(v) CONTRACTOR'S BREACH OF THE TERMS AND CONDITIONS OF THIS AGREEMENT; OR

(vi) ANY ACT OR OMISSION OF CONTRACTOR OR ITS OFFICERS, AGENTS, INVITEES, EMPLOYEES OR SUBCONTRACTORS (SUCH OFFICERS, AGENTS, INVITEES, EMPLOYEES AND SUBCONTRACTORS BEING REFERRED TO HEREIN INDIVIDUALLY AS A "CONTRACTOR PARTY" AND COLLECTIVELY, "CONTRACTOR PARTIES"), OR ANYONE DIRECTLY OR INDIRECTLY EMPLOYED BY ANY OF THEM, OR ANYONE THEY CONTROL OR EXERCISE CONTROL OVER.

THE LIABILITY ASSUMED BY CONTRACTOR WILL NOT BE AFFECTED BY THE FACT, IF IT IS A FACT, THAT ANY DAMAGE, DESTRUCTION, INJURY OR DEATH WAS OCCASIONED BY OR CONTRIBUTED TO BY THE NEGLIGENCE OF RAILWAY, ITS AGENTS, SERVANTS, EMPLOYEES OR OTHERWISE, BUT EXCLUDING CLAIMS WHOLLY CAUSED BY RAILWAY'S SOLE NEGLIGENCE AND EXCLUDING CLAIMS TO THE EXTENT THAT SUCH CLAIMS ARE CAUSED BY THE WILLFUL MISCONDUCT OR GROSS NEGLIGENCE OF RAILWAY.

FURTHER, TO THE FULLEST EXTENT PERMITTED BY LAW, CONTRACTOR AGREES, REGARDLESS OF ANY NEGLIGENCE OR ALLEGED NEGLIGENCE OF RAILWAY, TO INDEMNIFY, DEFEND AND HOLD HARMLESS RAILWAY AGAINST AND ASSUME THE DEFENSE OF ANY LIABILITIES ASSERTED AGAINST OR SUFFERED BY RAILWAY UNDER OR RELATED TO THE FEDERAL EMPLOYERS' LIABILITY ACT ("FELA") WHENEVER EMPLOYEES OF CONTRACTOR OR ANY CONTRACTOR PARTY CLAIM OR ALLEGE THAT THEY ARE EMPLOYEES OF RAILWAY OR OTHERWISE. THIS INDEMNITY SHALL ALSO EXTEND, ON THE SAME BASIS, TO FELA CLAIMS BASED ON ACTUAL OR ALLEGED VIOLATIONS OF ANY FEDERAL, STATE OR LOCAL LAWS OR REGULATIONS, INCLUDING BUT NOT LIMITED TO THE SAFETY APPLIANCE ACT, THE LOCOMOTIVE INSPECTION ACT, THE OCCUPATIONAL SAFETY AND HEALTH ACT, THE RESOURCE

CONSERVATION AND RECOVERY ACT, AND ANY SIMILAR STATE OR FEDERAL STATUTE.

Contractor further agrees, at its expense, in the name and on behalf of Railway, that it will adjust and settle all Liabilities against Railway, and will, at Railway's discretion, appear and defend any suits or actions of law or in equity brought against Railway on any claim or cause of action arising out of any liability assumed by Contractor under this Agreement for which Railway is liable or is alleged to be liable. Railway will give notice to Contractor, in writing, of the receipt or dependency of such claims and thereupon Contractor must proceed to adjust and handle to a conclusion such claims, and in the event of a suit being brought against Railway, Railway may forward summons and complaint or other process in connection therewith to Contractor, and Contractor, at Railway's discretion, must defend, adjust, or settle such suits and protect, indemnify, and save harmless Railway from and against all Liabilities arising out of any such claims or suits, provided that the foregoing indemnification obligations do not include Liabilities arising wholly out of the sole negligence of Railway or to the extent caused by the gross negligence or willful misconduct of Railway.

In addition to any other provision of this Agreement, in the event that all or any portion of this Article shall be deemed to be inapplicable for any reason, including without limitation as a result of a decision of an applicable court, legislative enactment or regulatory order, the parties agree that this Article shall be interpreted as requiring Contractor to indemnify Railway to the fullest extent permitted by applicable law. **THROUGH THIS AGREEMENT THE PARTIES EXPRESSLY INTEND FOR CONTRACTOR TO INDEMNIFY RAILWAY FOR RAILWAY'S ACTS OF NEGLIGENCE, BUT EXCLUDING CLAIMS WHOLLY CAUSED BY RAILWAY'S SOLE NEGLIGENCE AND EXCLUDING CLAIMS TO THE EXTENT THAT SUCH CLAIMS ARE CAUSED BY THE WILLFUL MISCONDUCT OR GROSS NEGLIGENCE OF RAILWAY.**

It is mutually understood and agreed that the assumption of liabilities and indemnification provided for in this Agreement survive any termination of this Agreement.

Section 2. TERM

This Agreement is effective from the date of the Contract until (i) the completion of the project set forth herein, and (ii) full and complete payment to Railway of any and all sums or other amounts owing and due hereunder.

Section 3. INSURANCE

Contractor must, at its sole cost and expense, procure and maintain during the life of this Agreement the following insurance coverage:

A. Commercial General Liability Insurance. This insurance shall contain broad form contractual liability with a combined single limit of a minimum of $2,000,000.00 per occurrence, and $4,000,000.00 in the aggregate, but in no event less than the amount otherwise carried by the Contractor. Coverage must be purchased on a post 1998 ISO occurrence form or equivalent and include coverage for, but not limited to, the following:
    - Bodily Injury and Property Damage
    - Personal Injury and Advertising Injury
    - Fire legal liability
    - Products and completed operations

This policy shall also contain the following endorsements, which shall be indicated on the certificate of insurance:

- The definition of insured contract shall be amended to remove any exclusion or other limitation for any work being done within 50 feet of railroad property.
- Waiver of subrogation in favor of and acceptable to Railroad.
- Additional insured endorsement in favor of and acceptable to Railroad.
- Separation of insureds.
- The policy shall be primary and non-contributing with respect to any insurance carried by Railroad.

It is agreed that the workers' compensation and employers' liability related exclusions in the Commercial General Liability insurance policy(s) required herein are intended to apply to employees of the policy holder and shall not apply to Railroad employees.

No other endorsements limiting coverage as respects obligations under this Agreement may be included on the policy with regard to the work being performed under this Agreement.

B. Business Automobile Insurance. This insurance shall contain a combined single limit of at least $1,000,000 per occurrence, and include coverage for, but not limited to the following:

- Bodily injury and property damage
- Any and all vehicles owned, used or hired

This policy shall also contain the following endorsements or language, which shall be indicated on the certificate of insurance:

- Waiver of subrogation in favor of and acceptable to Railroad.
- Additional insured endorsement in favor or and acceptable to Railroad.
- Separation of insureds.
- The policy shall be primary and non-contributing with respect to any insurance carried by Railroad.

C. Workers Compensation and Employers Liability Insurance. This insurance shall include coverage for, but not limited to:

- Contractor's statutory liability under the worker's compensation laws of the state(s) in which the work is to be performed. If optional under State law, the insurance must cover all employees anyway.
- Employers' Liability (Part B) with limits of at least $500,000 each accident, $500,000 by disease policy limit, $500,000 by disease each employee.

This policy shall also contain the following endorsements or language, which shall be indicated on the certificate of insurance:

- Waiver of subrogation in favor of and acceptable to Railroad.

D. Railroad Protective Liability Insurance. This insurance shall name only the Railroad as the Insured with coverage of at least $5,000,000 per occurrence and $10,000,000 in the aggregate. The policy shall be issued on a standard ISO form CG 00 35 10 93 and include the following:

- *Endorsed to include the Pollution Exclusion Amendment (ISO form CG 28 31 10 93)*
- Endorsed to include the Limited Seepage and Pollution Endorsement.

- Endorsed to remove any exclusion for punitive damages.
- No other endorsements restricting coverage may be added.
- The original policy must be provided to Railroad prior to performing any work or services under this Agreement

In lieu of providing a Railroad Protective Liability Policy, Contractor may participate in BNSF's Blanket Railroad Protective Liability Insurance Policy available to Contractor.

Other Requirements:

All policies (applying to coverage listed above) must not contain an exclusion for punitive damages and certificates of insurance must reflect that no exclusion exists.

Contractor agrees to waive its right of recovery against Railroad for all claims and suits against Railroad, except for claims and suits arising wholly out of the sole negligence, or to the extent caused by the gross negligence or willful misconduct, of Railroad. In addition, its insurers, through the terms of the policy or policy endorsement, waive their right of subrogation against Railroad for all claims and suits, except for claims and suits arising wholly out of the sole negligence, or to the extent caused by the gross negligence of willful misconduct, of Railroad. The certificate of insurance must reflect the waiver of subrogation endorsement. Contractor further waives its right of recovery, and its insurers also waive their right of subrogation against Railroad for loss of its owned or leased property or property under Contractor's care, custody or control, except for the right of recovery or right of subrogation arising wholly out of the sole negligence, or to the extent caused by the gross negligence or willful misconduct, of Railroad.

Contractor is not allowed to self-insure without the prior written consent of Railroad. If granted by Railroad, any deductible, self-insured retention or other financial responsibility for claims must be covered directly by Contractor in lieu of insurance. Any and all Railroad liabilities that would otherwise, in accordance with the provisions of this Agreement, be covered by Contractor's insurance will be covered as if Contractor elected not to include a deductible, self-insured retention or other financial responsibility for claims.

Prior to commencing the C&M Work, Contractor must furnish to Railroad acceptable certificate(s) of insurance including an original signature of the authorized representative evidencing the required coverage, endorsements, and amendments. The policy(ies) must contain a provision that obligates the insurance company(ies) issuing such policy(ies) to notify Railroad in writing at least 30 days prior to any cancellation, non-renewal, substitution or material alteration. This cancellation provision must be indicated on the certificate of insurance. Upon request from Railroad, a certified duplicate original of any required policy must be furnished. Certificate(s) should be sent to the following address:

Ebix BPO
PO Box 12010-BN
Hemet, CA 92546-8010
Fax number: 951-652-2882
Email: bnsf@ebix.com

Any insurance policy must be written by a reputable insurance company reasonably acceptable to Railroad or with a current Best's Guide Rating of A- and Class VII or better, and authorized to do business in the state(s) in which the service is to be provided.

Contractor represents that this Agreement has been thoroughly reviewed by Contractor's insurance agent(s)/broker(s), who have been instructed by Contractor to procure the insurance coverage required by this Agreement. Allocated Loss Expense must be in addition to all policy limits for coverages referenced above.

Not more frequently than once every five years, Railroad may reasonably modify the required insurance coverage to reflect then-current risk management practices in the railroad industry and underwriting practices in the insurance industry.

If any portion of the operation is to be subcontracted by Contractor, Contractor must require that its subcontractors provide and maintain the insurance coverages set forth herein, naming Railroad as an additional insured, and requiring that the subcontractors release, defend and indemnify Railroad to the same extent and under the same terms and conditions as Contractor is required to release, defend and indemnify Railroad herein.

Failure to provide evidence as required by this section will entitle, but not require, Railroad to immediately suspend work under this Agreement until such evidence is provided. Acceptance of a certificate that does not comply with this section will not operate as a waiver of Contractor's obligations hereunder.

The fact that insurance (including, without limitation, self-insurance) is obtained by Contractor will not be deemed to release or diminish the liability of Contractor including, without limitation, liability under the indemnity provisions of this Agreement. Damages recoverable by Railroad will not be limited by the amount of the required insurance coverage.

For purposes of this section, Railroad means "Burlington Northern Santa Fe, LLC", "BNSF Railway Company" and the subsidiaries, successors, assigns and affiliates of each.

Section 4. EXHIBIT C CONTRACTOR REQUIREMENTS

The Contractor must observe and comply with all provisions, obligations, requirements and limitations contained in the Contract, and the Contractor Requirements set forth on Exhibit C attached to this Agreement and the Contract, including, but not be limited to, payment of all costs incurred for any damages to Railway roadbed, tracks, and/or appurtenances thereto, resulting from use, occupancy, or presence of its employees, representatives, or agents or subcontractors on or about the construction site.

Section 5. TRAIN DELAY

Contractor is responsible for and hereby indemnifies and holds harmless Railway (including its affiliated railway companies, and its tenants) for, from and against all damages arising from any unscheduled delay to a freight or passenger train which affects Railway's ability to fully utilize its equipment and to meet customer service and contract obligations. Contractor will be billed, as further provided below, for the economic losses arising from loss of use of equipment, contractual loss of incentive pay and bonuses and contractual penalties resulting from train delays, whether caused by Contractor, or subcontractors, or by the Railway performing work under this Agreement. Railway agrees that it will not perform any act to unnecessarily cause train delay.

For loss of use of equipment, Contractor will be billed the current freight train hour rate per train as determined from Railway's records. Any disruption to train traffic may cause delays to multiple trains at the same time for the same period.

Additionally, the parties acknowledge that passenger, U.S. mail trains and certain other grain, intermodal, coal and freight trains operate under incentive/penalty contracts between Railway and its customer(s). Under these arrangements, if Railway does not meet its contract service commitments, Railway may suffer loss of performance or incentive pay and/or be subject to penalty payments. Contractor is responsible for any train performance and incentive penalties or other contractual economic losses actually incurred by Railway which are attributable to a train delay caused by Contractor or its subcontractors.

The contractual relationship between Railway and its customers is proprietary and confidential. In the event of a train delay covered by this Agreement, Railway will share information relevant to any train delay to the extent consistent with Railway confidentiality obligations. Damages for train delay are currently $382.20 per hour per incident. **THE RATE THEN IN EFFECT AT THE TIME OF PERFORMANCE BY THE CONTRACTOR HEREUNDER WILL BE USED TO CALCULATE THE ACTUAL COSTS OF TRAIN DELAY PURSUANT TO THIS AGREEMENT.**

Contractor and its subcontractors must give Railway's Project Engineer (402) 458-7537 thirty (30) days' minimum advance notice of the times and dates for proposed work windows. Railway and Contractor will establish mutually agreeable work windows for the project. Railway has the right at any time to revise or change the work windows due to train operations or service obligations. Railway will not be responsible for any additional costs or expenses resulting from a change in work windows. Additional costs or expenses resulting from a change in work windows shall be accounted for in Contractor's expenses for the project.

Contractor and subcontractors must plan, schedule, coordinate and conduct all Contractor's work so as to not cause any delays to any trains.

[Signature page follows]

Kindly acknowledge receipt of this letter by signing and returning to the Railway two original copies of this letter, which, upon execution by Railway, will constitute an Agreement between us.

_____	
(Contractor)	**BNSF Railway Company**
By:_____	By:_____
Printed Name: _____	Name:_____
Title:_____	*Project Engineer*
Contact Person: _____	Accepted and effective this _____day of 20__.
Address: _____	
_____	
City:_____ State:___ Zip:____	
Fax: _____	
Phone: _____	
E-mail:_____	

EXHIBIT D

Final Clearances

Pursuant to the provisions of **Section 3.1.3** of the C&M Agreement, approved Final Clearances for each segment of City C&M Work being constructed pursuant to the City Work Final Design are attached hereto as **Exhibit D**.

EXHIBIT E

Soil Management Plan

In addition to and not in limitation of the requirements and obligations of City and City Contractors contained in the C&M Agreement, the following requirements shall apply to City and City Contractors with respect to management of impacted environmental media. In the event of conflicts between the terms of this **Exhibit E** and the rest of the C&M Agreement, including but not limited to the provisions of **Exhibit C** and, as applicable, **Exhibit C-1(A)** or **Exhibit C-1(B)**, the most restrictive provisions shall apply to City and City Contractors.

Proper Management of Impacted Media

1. Access

Access to the West Haymarket Redevelopment Site (WHRS) is restricted to railroad and City of Lincoln personnel and contractors conducting work in their official capacity as employees or contractors of their respective organizations. Access to Railroad operating property for purposes of providing construction – related services is subject to specific safety and rules training certifications and requirements found at: **www.contractororientation.com**. Access to other non-railroad private property for purposes of performing construction – related services within the WHRS must be arranged through the EPMT.

2. Management Practices

Due to the potential risks and penalties involved in management of impacted media and protection of rare and unique saline wetlands as well as the wide applicability of these issues to planned construction activity, prescriptive management practices for these areas are as follows:

2.1 Impacted Soil and Debris Management

Attachment 3 - NDEQ Environmental Guidance Document 05-061 "Investigation Derived Waste and Remediation Considerations" (GD 05-061) is provided as reference. Relevant and critical points extracted from GD 05-061 as well as NDEQ's Title 132 (Integrated Solid Waste Management Regulations) for purposes of implementation and compliance is as follows:

1. A fundamental premise regarding the regulatory status of any soils, debris or other media encountered during intrusive activities is that such items are not considered waste material until determined by the Project Manager in consultation with the Technical Representative to be no longer suitable for its intended purpose.

2. Title 132, Chapter 1, Section 041 defines fill as: "*solid waste that consists only of one or more of the following: sand, gravel, stone, soil, rock, brick, concrete rubble, asphalt rubble, or similar material*".

3. The "*use of fill for legitimate land improvement (backfilling a foundation) is allowed per Title 132, Chapter 2, Section 002.01 as long as the fill is not mixed with other solid wastes that have the potential to cause contamination that may threaten human health or the environment*".

4. From pg. 2 of NDEQ GD 05-161: "*Activity not related to investigation or remediation is not considered "active management" under the waste regulations. For example, routine trench or foundation excavation spoils that are generated at a site that is not a remediation or investigation activity site or are not related to remediation or investigation activities are not considered a waste unless it is intended for disposal. Such spoils could normally be replaced in the excavation.*"

5. Prior to initiation of each construction task, the project manager will consult with the technical representative to determine the type of material anticipated to be excavated, potential

contaminants of concern (if any) and allowable re-use (including use as fill), alternatives to be employed for excess soil or debris to be generated associated with his/her respective work task. The project manager will work with the construction representative and advise where excess soils or debris shall be stored. Provisions for temporary storage of potentially impacted soil/debris must be explicitly agreed upon.

2.2 Grading/Excavation

Construction grading and excavation activities associated with applicable WHRS project activities require coordination and compliance as follows:

1. Grading/excavation project manager/contractor's representative (PM/CR) must contact the Technical Representative (TR) at least 14 days prior to initiation of grading/excavation work to discuss anticipated conditions and any special precautions to consider.

2. The PM/CR must arrange for all utility clearance.

3. The PM/CR must meet with the TR to discuss task – specific precautions (as detailed in any and all applicable work activities described in this Section).

4. A TR must be on-site or on call to respond to questions or observations that could require sampling or determinations relevant to management of impacted soil or debris. ***It is the responsibility of the PM/CR to notify the TR of construction schedules and activities (including any changes in schedules or scope of work effort) that may require on-site support and observation***.

5. Unless superseded by other special considerations, grading/excavation activities may proceed per the contractual project/task plans and specifications.

6. Changing field considerations and observations (including encountering suspect soils/debris/other media or modifications of proposed areas/volumes of soil grading/excavation/filling) must be reported to the TR.

7. If during execution of contractual plans and specifications the PM/CR determines the need to manage excess soils/debris/other media) not previously addressed, the PM/CR will consult with the TR to discuss management of affected media. Resolution and ultimate fate of the affected media will be documented by the TR.

8. Work shutdown will be at the discretion of the PM/CR's corporate health and safety policies and practices.

2.3 Utility Work

Contractors performing utility work including all intrusive work (trenching, boring, digging, etc.) where surface features (soil, concrete, asphalt, vegetated surfaces) will be disturbed require conformance to the following procedures:

1. The utility project manager/contractor's representative (PM/CR) must contact the TR at least 14 days prior to initiation of intrusive utility work to discuss anticipated conditions and any special precautions to consider.

2. The PM/CR must arrange for all related utility clearance.

3. The PM/CR must meet with the TR to discuss task – specific precautions (as detailed in any and all applicable work activities described in this Section).

4. A TR must be on-site or on call to respond to questions or observations that could require sampling or determinations relevant to management of impacted soil or debris. ***It is the***

responsibility of the PM/CR to notify the TR of construction schedules and activities (including any changes in schedules or scope of work effort) that may require on-site support and observation.

5. Unless superseded by other special considerations, utility construction activities may proceed per the contractual project/task plans and specifications.

6. Changing field considerations and observations (including encountering suspect soils/debris/other media or modifications of proposed routes of utility corridors) must be immediately reported to the TR.

7. In general, soil/debris/spoils which will not be removed from the site can be used as backfill around utilities if determined by the PM/CR to be suitable fill material and the material has no appearance of contamination or odor. Soil/debris/spoils removed during the course of intrusive utility work with an appearance of contamination or odor will be immediately notified to the TR for consultation and resolution including temporary storage of the suspect material.

8. If during execution of contractual plans and specifications the PM/CR determines there is a need to manage excess soils/debris/other media) not previously addressed, the PM/CR will consult with the TR to discuss management of affected media. Resolution and ultimate fate of the affected media will be documented by the TR.

9. Work shutdown will be at the discretion of the PM/CR's corporate health and safety policies and practices.

SPILL/INCIDENT RESPONSE REFERRAL SHEET

SPILL REPORTING

First Call:

Environmental Project Management Team Technical Representatives:

Frank Uhlarik – Alfred Benesch & Company:	**402-333-5792**
	Cell: 402-669-0546
Alternate:	
Bill Imig – Olsson Associates:	**402-458-5903**
	Cell: 402-314-4568
Alternate:	
Miki Esposito – Environmental Project Management Team:	**402-441-6173**

Agencies/Railroad Authorities:

Nebraska Department of Environmental Quality:	**402-471-2186 or 877-253-2603**

After Hours, Weekends and Holidays:

Nebraska State Patrol Dispatch:	**402-471-4545**
BNSF Railway Company Resource Operations Center:	**800-832-5452**
Union Pacific Railroad Security:	**888-877-7267**
National Response Center:	**800-424-8802**

ALL OTHER INCIDENTS

Fire and Police: **Dial 911**

LIST OF ACRONYMS

CR	Contractor's Representative
SMP	Soil Management Plan
EPMT	City of Lincoln Environmental Project Management Team
PM	Project Manager
TR	Environmental Project Management Team Technical Representative
WHRS	West Haymarket Redevelopment Site

EXHIBIT D

Other Contract Documents

COMMENTARY TO ACCOMPANY CONSTRUCTION BONDS

A. GENERAL INFORMATION

There are two types of construction bonds that are required by statutes for public work in many jurisdictions and are widely used for other projects as well.

Construction Performance Bond
Construction Payment Bond

The Construction Performance Bond is an instrument that is used to assure the availability of funds to complete the construction.

The Construction Payment Bond is an instrument that is used to assure the availability of sufficient funds to pay for labor, materials and equipment used in the construction. For public work the Construction Payment Bond provides rights of recovery for workers and suppliers similar to their rights under the mechanics lien laws applying to private work.

The objective underlying the re-writing of construction bond forms was to make them more understandable to provide guidance to users. The intention was to define the rights and responsibilities of the parties, without changing the traditional rights and responsibilities that have been decided by the courts. The new bond forms provide helpful guidance regarding time periods for various notices and actions and clarify the extent of available remedies.

The concept of pre-default meeting has been incorporated into the Construction Performance Bond. All of the participants favored early and informal resolution of the problems that may precipitate a default, but some Surety companies were reluctant to participate in pre-default settings absent specific authorization in the bond form.

The responsibilities of the Owner and the options available to the Surety when a default occurs are set forth in the Construction Performance Bond. Procedures for making a claim under the Construction Payment Bond are set forth in the form.

EJCDC recommends the use of two separate bonds rather than a combined form. Normally the amount of each bond is 100 percent of the contract amount. The bonds have different purposes and are separate and distinct obligations of the Surety. The Surety Association reports that the usual practice is to charge a single premium for both bonds and there is no reduction in premium for using a combined form or for issuing one bond without the other.

B. COMPLETING THE FORMS

Bonds have important legal consequences; consultation with an attorney and a bond specialist is encouraged with respect to federal, state and local laws applicable to bonds and with respect to completing or modifying the bond forms.

Both bond forms have a similar format and the information to be filled in is ordinarily the same on both bonds. If modification is necessary, the modifications may be different.

The bond forms are prepared for execution by the Contractor and the Surety. Evidence of authority to bind the Surety is usually provided in the form of a power of attorney designating the agent who is authorized to sign on behalf of the Surety. The power of attorney should be filed with the signed bonds.

Each bond must be executed separately since they cover separate and distinct obligations.

Preferably the bond date should be the same date as the contract, but in no case should the bond date precede the date of the contract.

CONSTRUCTION PERFORMANCE BOND

Any singular reference to Contractor, Surety, Owner or other party shall be considered plural where applicable.

CONTRACTOR (Name and Address):

SURETY (Name and Principal Place of Business):

Owner (Name and Address):
West Haymarket Joint Public Agency
555 South 10th St.
Lincoln, NE 68508

CONSTRUCTION CONTRACT
Date:
Amount:

Description (Name and Location):
For all labor, material and equipment necessary for (Bid Name and Number)

BOND
Date:
Amount:
Modifications to this Bond Form:

CONTRACTOR AS PRINCIPAL
Company: (Corp. Seal)

SURETY
Company: (Corp.Seal)

Signature:_____
Name and Title: Name and Title:

Signature:_____

EJCDC NO. 1910-28a (1984 Edition)
Prepared through the joint efforts of The Surety Assoc. of America. Engineers' Joint Contract Documents Committee. The Associated General Contractors of America, and the American Institute of Architects.

1. The Contractor and the Surety, jointly and severally, bind themselves their heirs, executors, administrators, successors and assigns to the Owner for the performance of the Construction Contract, which is incorporated herein by reference.

2. If the Contractor performs the Construction Contract, the Surety and the Contractor shall have no obligation under this Bond, except to participate in conferences as provided in Subparagraph 3.1.

3. If there is no Owner Default, the Surety's obligation under this Bond shall arise after:

3.1 The Owner has notified the Contractor and the Surety at its address described in Paragraph 10 below, that the Owner is considering declaring a Contractor Default and has requested and attempted to arrange a conference with the Contractor and the Surety to be held not later than fifteen days after receipt of such notice to discuss methods of performing the Construction Contract. If the Owner, the Contractor and the Surety agree, the Contractor shall be allowed a reasonable time to perform the Construction Contract, but such an agreement shall not waive the Owner's right, if any, subsequently to declare a Contractor Default and

3.2 The Owner has declared a Contractor Default and formally terminated the Contractor's right to complete the contract. Such Contractor Default shall not be declared earlier than twenty days after the Contractor and the Surety have received notice as provided in Sub-paragraph 3.1; and

3.3 The Owner has agreed to pay the Balance of the Contract Price to the Surety in accordance with the terms of the Construction Contract or to a contractor selected to perform the Construction Contract in accordance with the terms of the contract with the Owner.

4. When the Owner has satisfied the conditions of Paragraph 3, the Surety shall promptly and at the Surety's expense take one of the following actions:

4.1 Arrange for the Contractor, with consent of the Owner, to perform and complete the Construction Contract, or

4.2 Undertake to perform and complete the Construction Contract itself, through its agents or through independent contractors: or

4.3 Obtain bids or negotiated proposals from qualified contractors acceptable to the Owner for a contract for performance and completion of the Construction Contract, arrange for a contract to be prepared for execution by the Owner and the contractor selected with the Owner's concurrence, to be secured with performance and payment bonds executed by a qualified surety equivalent to the bonds issued on the Construction Contract, and pay to the Owner the amount of damages as described in Paragraph 6 in excess of the Balance of the Contract Price incurred by the Owner resulting from the Contractor's default, or

4.4 Waive its right to perform and complete, arrange for completion, or obtain a new contractor and with reasonable promptness under the circumstances:

1. After investigation, determine the amount for which it may be liable to the Owner and as soon as practiceable after the amount is determined tender payment therefore to the Owner; or

2. Deny liability in whole or in part and notify the Owner citing reasons therefore.

5. If the Surety does not proceed as provided in Paragraph 4 with reasonable promptness, the Surety shall be deemed to be in default on this Bond fifteen days after receipt of an additional written notice from the Owner to the Surety demanding that the Surety perform its obligations under this Bond, and the Owner shall be entitled to enforce any remedy available to the Owner. If the Surety proceeds as provided in Subparagraph 4.4 and the Owner refuses payment tendered or the Surety has denied liability, in whole or in part, without further notice the Owner shall be entitled to enforce any remedy available to the Owner.

6. After the Owner has terminated the Contractor's right to complete the Construction Contract, and if the Surety elects to act under Subparagraph 4.1, 4.2, or 4.3 above, then the responsibilities of the Surety to the Owner shall not be greater than those of the Contractor under the Construction Contract, and the responsibilities of the Owner to the Surety shall not be greater than those of the Owner under the Construction Contract. To the limit of the amount of this Bond, but subject to commitment by the Owner of the Balance of the Contract Price to mitigation of costs and damages on the Construction Contract, the Surety is obligated without duplication for:

6.1 The responsibilities of the Contractor for correction of defective work and completion of the Construction Contract;

6.2 Additional legal, design professional and delay costs resulting from the Contractor's Default, and resulting from the actions or failure to act of the Surety under Paragraph 4; an d

6.3 Liquidated damages, or if no liquidated damages are specified in the Construction Contract, actual damages caused by delayed performance or non-performance of the Contractor.

7. The Surety shall not be liable to the Owner or others for obligations of the Contractor that are unrelated to the Construction Contract, and the Balance of the Contract Price shall not be reduced or set off on account of any such unrelated obligations. No right of action shall accrue on this Bond to any person or entity other than the Owner or its heirs, executors, administrators, or successors.

8. The Surety hereby waives notice of any change, including changes of time, to the Construction Contract or to related sub-contracts, purchase orders and other obligations.

9. Any proceeding, legal or equitable, under this Bond may be instituted in any court of competent jurisdiction in the location in which the work or part of the work is located and shall be instituted within two years after Contractor Default or within two years after the Contractor ceased working or within two years after the Surety refuses or fails to perform its obligations under this Bond, whichever occurs first. If the provisions of this Paragraph are void or prohibited by law, the minimum period of limitation available to sureties as a defense in the jurisdiction of the suit shall be applicable.

10. Notice to the Surety, the Owner or the Contractor shall be mailed or delivered to the address shown on the signature page.

11. When this Bond has been furnished to comply with a satutory or other legal requirement in the location where the construction was to be performed, any provision in this Bond conflicting with said statutory or legal requirement shall be deemed deleted herefrom and provisions conforming to such statutory or other legal requirement shall be deemed incorporated herein. The intent is that this Bond shall be construed as a statutory bond and not as a common law bond.

12. Definitions.

12.1 Balance of the Contract Price: The total amount payable by the Owner to the Contractor under the Construction Contract after all proper adjustments have been made, including allowance to the Contractor of any amounts received or to be received by the Owner in settlement of insurance or other claims for damages to which the Contractor is entitled, reduced by all valid and proper payments made to or on behalf of the Contractor under the Construction Contract.

12.2 Construction Contract: The agreement between the Owner and the Contractor identified on the signature page, including all Contract Documents and changes thereto.

12.3 Contractor Default: Failure of the Contractor, which has neither been remedied nor waived, to perform or otherwise to comply with the terms of the Construction Contract.

12.4 Owner Default: Failure of the Owner, which has neither been remedied nor waived, to pay the Contractor as required by the Construction Contract or to perform and complete or comply with the other terms thereof.

CONSTRUCTION PAYMENT BOND

Any singular reference to Contractor, Surety, Owner or other party shall be considered plural where applicable.

CONTRACTOR (Name and Address):

SURETY (Name and Principal Place Of Business):

Owner (Name and Address):
West Haymarket Joint Public Agency
555 South 10th St.
Lincoln, NE 68508

CONSTRUCTION CONTRACT
Date:
Amount:

Description (Name and Location):
For all labor, material and equipment necessary for (Bid Name and Number)

BOND
Date:
Amount:

Modifications to this Bond Form:

CONTRACTOR AS PRINCIPAL
Company: (Corp. Seal)

SURETY
Company: (Corp. Seal)

Signature: _____

Name and Title:

Signature: _____

Name and Title:

EJCDC NO. 1910-28B (1984 Edition)
Prepared through the joint efforts of The Surety Assoc. of America. Engineers' Joint Contract Documents Committee. The Associated General Contractors of America, and the American Institute of Architects.

1. The Contractor and the Surety, jointly and severally, bind themselves their heirs, executors, administrators, successors and assigns to the Owner to pay for labor, materials and equipment furnished for use in the performance of the Construction Contract, which is incorporated herein by reference.
2. With respect to the Owner, this obligation shall be null and void if the Contractor:

   2.1 Promptly makes payment, directly or indirectly, for all sums due Claimants, and

   2.2 Defends, indemnifies and holds harmless the Owner from all claims, demands, liens or suits by any person or entity who furnished labor, materials or equipment for use in the performance of the Construction Contract, provided the Owner has promptly notified the Contractor and the Surety (at the address described in Paragraph 12) of any claims, demands, liens or suits and tendered defense of such claims, demands, liens or suits to the Contractor and the Surety, and provided there is no Owner Default.
3. With respect to Claimants, this obligation shall be null and void if the Contractor promptly makes payment, directly or indirectly, for all sums due.
4. The Surety shall have no obligation to Claimants under this Bond until:

   4.1 Claimants who do not have a direct contract with the Contractor have given notice to the Surety (at the address described in Paragraph 12) and sent a copy, or notice thereof to the Owner, stating that a claim is being made under this Bond and with substantial accuracy the amount of the claim.

   4.2 Claimants who do not have a direct contract with the Contractor:

   1.Have furnished written notice to the Contractor and sent a copy, or notice thereof, to the Owner, within 90 days after having last performed labor or last furnished materials or equipment included in the claim stating, with substantial accuracy, the amount of the claim and the name of the party to whom the materials were furnished or supplied or for whom the labor was done or performed, and

   2.Have either received a rejection in whole or in part from the Contractor, or not received within 30 days of furnishing the above notice any communication from the Contractor by which the Contractor has indicated the claim will be paid directly or indirectly; and

   3.Not having been paid within the above 30 days, have sent a written notice to the Surety (at the address described in Paragraph 12) and sent a copy, or notice thereof, to the Owner, stating that a claim is being made under this Bond and enclosing a copy of the previous written notice furnished to the Contractor.
5. If a notice required by Paragraph 4 is given by the Owner to the Contractor or to the Surety, that is sufficient compliance.
6. When the Claimant has satisfied the conditions of Paragraph 4, the Surety shall promptly and at the Surety's expense take the following actions:

   6.1 Send an answer to the Claimant, with a copy to the Owner, within 45 days after receipt of the claim, stating the amounts that are undisputed and the basis for challenging any amounts that are disputed.

   6.2 Pay or arrange for payment of any undisputed amounts.
7. The Surety's total obligation shall not exceed the amount of this Bond, and the amount of this Bond shall be credited for any payments made in good faith by the Surety.
8. Amounts owed by the Owner to the Contractor under the Construction Contract shall be used for the performance of the Construction Contract and to satisfy claims, if any, under any Construction Performance Bond. By the Contractor furnishing and the Owner accepting this Bond, they agree that all funds earned by the Contractor in the performance of the Construction Contract are dedicated to satisfy obligations of the Contractor and the Surety under this Bond, subject to the Owner's priority to the funds for the completion of the work.
9. The Surety shall not be liable to the Owner, Claimants or others for obligations of the Contractor that are unrelated to the Construction Contract. The Owner shall not be liable for payment of any costs or expenses of any Claimant under this Bond, and shall have under this Bond no obligations to make payments to, give notices on behalf of, or otherwise have obligations to Claimants under this Bond.
10. The Surety hereby waives notice of any change, including changes of time, to the Construction Contract or to related subcontracts, purchase orders and other obligations.
11. No suite or action shall be commenced by a Claimant under this Bond other than in a court of competent jurisdiction in the location in which the work or part of the work is located or after the expiration of one year from the date (1) on which the Claimant gave the notice required by Subparagraph 4.1 or Clause 4.1 (iii), or (2) on which the last labor or service was performed by anyone or the last materials or equipment were furnished by anyone under the Construction Contract, whichever of (1) or (2) first occurs. If the provisions of this Paragraph are void or prohibited by law, the minimum period of limitation available to sureties as a defense in the jurisdiction of the suit shall be applicable.
12. Notice to the Surety, the Owner or the Contractor shall be mailed or delivered to the address shown on the signature page. Actual receipt of notice by Surety, the Owner or the Contractor, however accomplished, shall be sufficient compliance as of the date received at the address shown on the signature page.
13. When this Bond has been furnished to comply with a statutory or other legal requirement in the location where the construction was to be performed, any provision in this Bond conflicting with said statutory or legal requirement shall be deemed deleted here from and provisions conforming to such statutory or other legal requirement shall be deemed incorporated herein. The intent is, that this Bond shall be construed as a statutory bond and not as a common law bond.
14. Upon request by any person or entity appearing to be a potential beneficiary of this Bond, the Contractor shall promptly furnish a copy of this Bond or shall permit a copy to be made.
15. DEFINITIONS

    15.1 Claimant: An individual or entity having a direct contract with the Contractor or with a subcontractor of the Contractor to furnish labor, materials or equipment for use in the performance of the Contract. The intent of this Bond shall be to include without limitation in the terms "labor, materials, or equipment" that part of water, gas, power, light, heat, oil, gasoline, telephone service or rental equipment used in the Construction Contract, architectural and engineering services required for performance of the work of the Contractor and the Contractor's subcontractors, and all other items for which a mechanic's lien may be asserted in the jurisdiction where the labor, materials or equipment were furnished.

    15.2 Construction Contract: The agreement between the Owner and the Contractor identified on the signature page, including all Contract Documents and changes thereto.

    15.3 Owner Default: Failure of the Owner, which has neither been remedied nor waived, to pay the Contractor as required by the Construction Contract or to perform and complete or comply with the other terms thereof.

(FOR INFORMATION ONLY - NAME, ADDRESS AND TELEPHONE)
AGENT OR BROKER: OWNER'S REPRESENTATIVE (ARCHITECT, ENGINEER OR OTHER PARTY)

INDEMNIFICATION AND INSURANCE REQUIREMENTS
FOR ALL WEST HAYMARKET JOINT
PUBLIC AGENCY CONTRACTS

1. INDEMNIFICATION

A. **Indemnification of JPA**

TO THE FULLEST EXTENT PERMITTED BY LAW, CONTRACTOR SHALL RELEASE, INDEMNIFY, DEFEND AND HOLD HARMLESS JPA AND JPA'S MEMBERS, SUCCESSORS, ASSIGNS, LEGAL REPRESENTATIVES, OFFICERS, EMPLOYEES AND AGENTS FOR, FROM AND AGAINST ANY AND ALL CLAIMS, LIABILITIES, FINES, PENALTIES, COSTS, DAMAGES, LOSSES, LIENS, CAUSES OF ACTION, SUITS, DEMANDS, JUDGMENTS AND EXPENSES (INCLUDING, WITHOUT LIMITATION, COURT COSTS AND ATTORNEYS' FEES) OF ANY NATURE, KIND OR DESCRIPTION OF ANY PERSON (INCLUDING, WITHOUT LIMITATION, THE EMPLOYEES OF THE PARTIES HERETO) (COLLECTIVELY, "LIABILITIES") ARISING OUT OF, RESULTING FROM OR CAUSALLY RELATED TO (IN WHOLE OR IN PART), PERFORMANCE OF THE CONTRACT THAT RESULTS IN BODILY INJURY, SICKNESS, DISEASE, OR DEATH CAUSED IN WHOLE OR IN PART BY ANY ACT OR OMMISSION OF THE CONTRACTOR, ANY SUBCONTRACTOR, ANYONE DIRECTLY OR INDIRECTLY EMPLOYED BY ANY OF THEM, OR ANYONE FOR WHOSE ACTS ANY OF THEM MAY BE LIABLE WHETHER OR NOT IT IS CAUSED IN WHOLE OR PART BY A PARTY INDEMNIFIED HEREUNDER.

Such indemnification shall not be construed to negate, abridge, limit or otherwise reduce any other right or obligation of indemnity which would otherwise exist as to any party or person described in this section.

B. In any and all claims by any employee (whether an employee of the Contractor or subcontractor, or their respective agents or assigns or by anyone directly or indirectly employed by any of them or anyone for whose acts any of them may be liable as an employer) in whole or in part against JPA, its officers, agents, employees, volunteers or consultants, the above indemnification shall not be limited in any way by the amount of damages, compensation, benefits or other contributions payable by or on behalf of a the employer under Worker's Compensation statutes, disability benefit acts, or any other employee benefit or payment acts as the case may be.

C. The obligations of indemnification herein shall not include or extend to:

(1) Any outside engineer's or architect's professional errors and omissions involving the approval or furnishing of maps, drawings, opinions, reports, surveys, change orders, designs or specifications within the scope of professional services provided to JPA and related to the Contract; and

(2) Any claims wholly caused by the JPA's sole negligence and excluding claims to the extent such claims are caused by the willful misconduct or gross negligence of the JPA.

D. In the event of any litigation of any such claims shall be commenced against JPA, Contractor shall defend the same at Contractor's sole expense upon notice thereof from JPA. Contractor shall notify the insuring company that JPA reserves and does not waive any statutory or governmental immunity and neither Contractor, nor Contractor's counsel whether employed by Contractor or by an insurer on behalf of the Contractor shall waive such defenses or enter into any settlement or other disposition requiring waiver of any defenses or immunity of JPA without the express written consent of the JPA.

2. INSURANCE GENERAL PROVISIONS

A. **Approved Coverage Prior to Commencing Work/Subcontractors Included.** Contractor shall purchase and maintain in place insurance to protect Contractor and JPA, its officers, agents, employees, volunteers and consultants from and against all liabilities and hazards as provided in these insurance requirements throughout the duration of the Contract. Contractor shall not commence work under this contract until the Contractor has obtained all insurance required under Section 2. below and such insurance has been approved by the City Attorney for JPA, nor shall the Contractor allow any subcontractor to commence work on any subcontract until all similar insurance required of the subcontractor has been so obtained and approved.

B. **Occurrence Basis Coverage.** All insurance shall be provided on an occurrence basis and not on a claims made basis, except for hazardous materials, errors and omissions, or other coverage not reasonably available on an occurrence basis; provided that all such claims made coverage is subject to the prior written approval of the City Attorney and must be clearly indicated as such in any certificate showing coverage.

C. **Authorized and Rated Insurers Required.** All insurance coverage are to be placed with insurers authorized to do business in the State of Nebraska and must be placed with an insurer that has an A.M. Best's Rating of no less than A:VII unless specific approval has been granted by the City Attorney.

D. **Certificates Showing Coverage**. Prior to commencing the Work, Contractor must furnish to JPA adequate written documentation including certificate(s) of insurance, which have the original signature of the authorized representative, declaration pages or other acceptable policy information evidencing the required coverage, endorsements, and amendments. The policy(ies) must contain a provision that obligates the insurance company(ies) issuing such policy(ies) to notify JPA in writing at least 30 days prior to any cancellation, except that only ten (10) days prior notice is required for cancellation due to nonpayment of premium. Upon request from JPA, a certified duplicate original of any required policy must be furnished. Certificate(s) should be sent to the following address:

West Haymarket Joint Public Agency
c/o City Attorney
City of Lincoln, Nebraska
555 South 10th Street
Lincoln, NE 68508

Certificates of insurance may utilize an appropriate standard ACORD Certificate of Insurance form showing the specific limits of insurance coverage required by this Article; provided that restrictions, qualifications or declarations inconsistent with the requirements of this Article shall not relieve the Contractor from providing insurance as required herein. Such certificates shall show JPA as additional insured except for applicable Worker's Compensation coverage, to include all work performed for JPA and specifically including, but not limited to, any liability caused or contributed to by the act, error, or omission of the Contractor, including any related subcontractors, third parties, agents, employees, officers or assigns of any of them. The inclusion of JPA as additional insured shall be for coverage only on a primary basis for liability coverage, and no coverage shall contain a policy or other restriction or attempt to provide restricted coverage for JPA, whether on an excess, contributory or other basis regardless of any other insurance coverage available to JPA, including by specific endorsement where necessary, as indicated in the following requirements.

E. **Terminology.** The terms "insurance," "insurance policy," or "coverage" as used in this article are used interchangeably and shall have the same meaning as "insurance" unless the context clearly requires otherwise. References to "ISO®" forms are merely for convenience and ease of reference, and an equivalent or better form as determined acceptable by the City Attorney may be used. (Note: ISO® is a registered trademark of ISO Properties, Inc.)

F. **Other Requirements**. Contractor agrees to waive its right of recovery against JPA for all claims and suits against JPA, except for claims and suits arising wholly out of the sole negligence, or to the extent caused by the gross negligence or willful misconduct, of JPA. In addition, its insurers, through the terms of the policy or policy endorsement, waive their right of subrogation against JPA for all claims and suits, except for claims and suits arising wholly out of the sole negligence, or to the extent caused by the gross negligence of willful misconduct, of JPA. The certificate of insurance must reflect the waiver of subrogation endorsement. Contractor further waives its right of recovery, and its insurers also waive their right of subrogation against JPA for loss of its owned or leased property or property under Contractor's care, custody or control, except for the right of recovery or right of subrogation arising wholly out of the sole negligence, or to the extent caused by the gross negligence or willful misconduct, of JPA.

Contractor is not allowed to self-insure without the prior written consent of JPA. If granted by JPA, any deductible, self-insured retention or other financial responsibility for claims must be covered directly by Contractor in lieu of insurance. Any and all JPA liabilities that would otherwise, in accordance with the provisions of this Agreement, be covered by Contractor's insurance will be covered as if Contractor elected not to include a deductible, self-insured retention or other financial responsibility for claims.

Upon notification to JPA of cancellation, non-removal, substitution or material alteration of any such policy(ies), JPA shall have the option to (i) if feasible, pay, on behalf of the Contractor, any and all such premiums, penalties, fees for expenses necessary to keep such policy(ies) in full force and effect; or (ii) in the event that such policy(ies) cannot be kept in full force and effect, enter into the open market to procure such policy(ies) of insurance on behalf of Contractor as required by this Agreement at the then current market rate. Upon any of the above occurrences, JPA shall invoice the Contractor for reimbursement of such premiums, penalties, fees, or expenses advanced on the JPA's behalf plus an additional fifteen percent (15%) of such advanced amounts as remuneration for JPA's overhead. Such amounts advanced by JPA shall be paid by the Contractor within thirty (30) days after delivery of a statement for such expense.

Contractor represents that this Agreement has been thoroughly reviewed by Contractor's insurance agent(s)/broker(s), who have been instructed by Contractor to procure the insurance coverage required by this Agreement. Allocated Loss Expense must be in addition to all policy limits for coverages referenced above.

If any portion of the operation is to be subcontracted by Contractor, Contractor must require that its subcontractors provide and maintain the insurance coverages set forth herein, naming JPA as an additional insured, and requiring that the subcontractors release, defend and indemnify JPA to the same extent and under the same terms and conditions as Contractor is required to release, defend and indemnify JPA herein.

Failure to provide evidence as required by Section 2. will entitle, but not require, JPA to immediately suspend work under this Agreement until such evidence is provided. Acceptance of a certificate that does not comply with this section will not operate as a waiver of Contractor's obligations hereunder. The fact that insurance (including, without limitation, self-insurance) is obtained by Contractor will not be deemed to release or diminish the liability of Contractor including, without limitation, liability under the indemnity provisions of this Agreement. Damages recoverable by JPA will not be limited by the amount of the required insurance coverage.

3. INSURANCE REQUIREMENTS

A. **Scope of Required Coverage.** The Contractor shall take out and maintain during the life of the Contract such insurance in the forms and minimum amounts as specified in this Section and as will protect Contractor and JPA from the following claims arising out of or resulting from or in connection with the Contractor's operations, undertakings or omissions directly or indirectly related to the Contract, whether by the Contractor or any Subcontractor or anyone directly or indirectly employed by any of them, or by anyone for whose acts any of them may be liable:

(1) Claims under workers' compensation, disability benefit, or other employee benefit acts;

(2) Claims arising out of bodily injury, occupational sickness or disease, or death of an employee or any other person;

(3) Claims customarily covered under personal injury liability coverage;

(4) Claims other than to the work itself arising out of an injury to or destruction of tangible property, including the loss of use resulting therefrom;

(5) Claims arising out of ownership, maintenance or use of any motor vehicle;

(6) Railroad protective liability coverage in the event the contract involves work to be performed within 50 feet of any railroad property and affecting any railroad bridge or trestle, tracks, road beds, tunnel, underpass or crossing.

B. **Worker's Compensation Insurance and Employer's Liability Insurance.** The Contractor shall provide applicable statutory Worker's Compensation Insurance with minimum limits as provided below covering all Contractor's employees, and in the case of any subcontracted work, the Contractor shall require the subcontractor similarly to provide Worker's Compensation Insurance for Subcontractor's employees. This policy shall contain the following endorsement or language: "Waiver of subrogation in favor of JPA."

The Contractor shall provide Employer's Liability Insurance with minimum limits as provided below placed with an insurance company authorized to write such insurance in all states where the Contractor will have employees located in the performance of this contract, and the Contractor shall require each Subcontractor similarly to maintain Employer's Liability Insurance on the Subcontractor's employees.

Coverage	**Listing**	**Min Amt**	**Notes**
Worker's Comp.			
	State	Statutory	
	Applicable Federal	Statutory	
Employer's Liability			
	Bodily Injury by accident	$500,000	each accident
	Bodily Injury by disease	$500,000	each employee
	Bodily Injury	$500,000	policy limit

C. **Commercial General Liability Insurance.**

(1) The Contractor shall provide Commercial General Liability Insurance in a policy form providing broad form contractual liability no less comprehensive and no more restrictive coverage than provided under the ISO® form CG00010798 or newer with standard exclusions "a" through "o" and with minimum limits as provided below.

Coverage	Min Amt	Notes
General	$5,000,000/$10,000,000	Each Occurrence/Aggregate
Products and Completed Operations	$5,000,000/$10,000,000	Each Occurrence/Aggregate
Personal and Advertising Injury	$5,000,000/$10,000,000	Each Occurrence/Aggregate
Fire Damage Limit	$ 100,000	any one fire
Medical Damage Limit	$ 10,000	any one person

(2) The required Commercial General Liability Insurance shall also include coverage for the following:

- Bodily injury and property damage.
- Fire legal liability
- Coverage for all premises and operations.
- Personal and advertising injury.
- Operations by independent contractors.
- X.C.U. Coverage including coverage for demolition of any building or structure, collapse, explosion, blasting, excavation and damage to property below the surface of ground.
- Any fellow employee exclusions shall be deleted.
- Coverage shall not contain an absolute pollution exclusion, and applicable remaining coverage shall apply for pollution exposures arising from products and completed operations.
- Coverage for products and completed operations maintained for duration of work and shall be maintained for a minimum of three years after final acceptance under the Contract or the warranty period for the same whichever is longer, unless modified in any Special Provisions.
- Liability coverage which shall include contractually assumed defense costs in addition to any policy limits.
- Contractual liability coverage.

(3) This policy shall also include the following endorsements which shall be indicated on the Certificate of Insurance.

- The definition of insured contract shall be amended to remove any exclusion or other limitation for work being done within 50 feet of railroad property.
- Endorsement to provide the general aggregate per project endorsement.
- Endorsement to provide waiver of subrogation in favor of and acceptable to JPA.
- Endorsement to provide that the policy shall be primary and non-contributory with respect to any insurance carried by the JPA.
- Separation of insureds.
- Additional insured endorsement in favor of and acceptable to the JPA.

(4) If work is to be performed within 50 feet of any railroad property and affecting any railroad bridge or trestle, tracks, road beds, tunnel, underpass or crossing, Railroad Contractual Liability Endorsement (ISO® form CG24170196 or newer). The definition of insured contract shall be amended to remove any exclusion or other limitation for any work done within fifty (50) feet of railroad property.

D. **Vehicle liability insurance coverage.**

The Contractor shall provide reasonable insurance coverage for all owned, non-owned, hired and leased vehicles. This insurance shall contain a combined single limit of at least $1,000,000 per occurrence, and include coverage for, but not limited to the following:

- Bodily injury and property damage
- Any and all vehicles owned, used or hired

This policy shall also contain the following endorsements or language, which shall be indicated on the certificate of insurance:

- Waiver of subrogation in favor of and acceptable to JPA.
- Additional insured endorsement in favor or and acceptable to JPA.
- Separation of insureds.
- The policy shall be primary and non-contributing with respect to any insurance carried by JPA.
- Endorsements to include contractual liability coverage and delete any fellow employee exclusion.
- If specifically required in the Special Provisions, the required coverage shall also include an endorsement for auto cargo pollution (ISO® form CA 99 48).

E. **Umbrella/Excess Insurance.** At the Contractor's option, the Commercial General Liability Insurance coverage limits specified in Section 3.C. above may be satisfied with a combination of primary and Umbrella/Excess Insurance.

F. **Railroad Protective Liability.** If work is to be performed within 50 feet of any railroad property and affecting any railroad bridge or trestle, tracks, road beds, tunnel, underpass or crossing or otherwise required by the Special Provisions or applicable requirements of an affected railroad, the Contractor shall provide Railroad Protective Liability Insurance naming the affected railroad/s as insured with minimum limits for bodily injury and property damage of $5,000,000 per occurrence, $10,000,000 aggregate, or such other limits as required in the Special Provisions or by the affected railroad. The original of the policy shall be furnished to the railroad and a certified copy of the same furnished to the City Attorney's office prior to any related construction or entry upon railroad premises by the Contractor or for work related to the Contract.

The policy shall be issued on a standard ISO form CG 00 35 10 93 and include the following endorsements:

- Endorsed to include the Pollution Exclusion Amendment (ISO form CG 28 31 10 93)
- Endorsed to include the Limited Seepage and Pollution Endorsement.

No other endorsements restricting coverage may be added. The original policy must be provided to Railroad prior to performing any work or services under this C&M Agreement.

In lieu of providing a Railroad Protective Liability Policy, Contractor may participate in ANY RAILROAD'S Blanket Railroad Protective Liability Insurance Policy available to JPA and JPA Contractors.

G. **Special Provision.** At the JPA's option, the minimum insurance requirements specified above may be increased or decreased by special provision in a JPA contract.

4. CONTRACTOR'S INSURANCE FOR OTHER LOSSES.

A. Contractor shall assume full responsibility for all loss or damage from any cause whatsoever to any tools owned, rented or used in connection with the Contract including any tools, machinery, equipment, storage devices, containers, sheds, temporary structures, staging structures, scaffolding, fences, forms, braces, jigs, screens, brackets, vehicles and the like owned or rented by Contractor, or Contractor's agents, subcontractors, suppliers, or employees.

B. In connection with the above, Contractor shall cause or require any applicable insurance related to physical damage of the same to provide a waiver of a right of subrogation against JPA.

5. NOTIFICATION IN EVENT OF LIABILITY OR DAMAGE.

A. The Contractor shall promptly notify JPA in writing and provide a copy of all claims and information presented to any of Contractor's insurance carrier/s upon any loss or claim or upon any occurrence giving rise to any liability or potential liability related to the Contract or related work. The notice to JPA shall include pertinent details of the claim or liability and an estimate of damages, names of witnesses, and other pertinent information including the amount of the claim, if any.

B. In the event JPA receives a claim or otherwise has actual knowledge of any loss or claim arising out of the Contract or related work and not otherwise known to or made against the Contractor, JPA shall promptly notify the Contractor of the same in writing, including pertinent details of the claim or liability; Provided, however JPA shall have no duty to inspect the project to obtain such knowledge, and provided further that JPA's obligations, if any, shall not relieve the Contractor of any liability or obligation hereunder.

6. PROPERTY INSURANCE/ BUILDER'S RISK.

A. The Contractor shall provide property insurance (a/k/a Builder's Risk or installation Floater) on all Projects involving construction or installation of buildings or structures and other projects where provided in the Special Provisions. Such insurance shall be provided in the minimum amount of the total contract sum and in addition applicable modifications thereto for the entire work on a replacement cost basis. Such insurance shall be maintained until JPA completes final acceptance of the work as provided in the Contract. Such insurance shall be written and endorsed, where applicable, to include the interests of JPA, Contractor, Subcontractors, Sub-subcontractors in the related work. The maximum deductible for such insurance shall be $5,000 for each occurrence, which deductible shall be the responsibility of the Contractor. Such insurance shall contain a "permission to occupy" endorsement.

B. All related Property Insurance shall be provided on a "Special Perils" or similar policy form and shall at a minimum insure against perils of fire including extended coverage and physical loss or damage including without limitation or duplication of coverage: flood, earthquake, theft, vandalism, malicious mischief, collapse, and debris removal, including demolition whether occasioned by the loss or by enforcement of applicable legal or safety requirements including compensation or costs for JPA's related costs and expenses (as owner) including labor required as a result of such loss.

C. All related Property Insurance shall include coverage for falsework, temporary buildings, work stored off-site or in-transit to the site, whether in whole or in part. Coverage for work off-site or in-transit shall be a minimum of 10% of the amount of the policy.

D. The Contractor's Property Insurance shall be primary coverage for any insured loss related to or arising out of the Contract and shall not be reduced by or coordinated with separate property insurance maintained by JPA.

smart # 10070200
7-26-10/law/tb

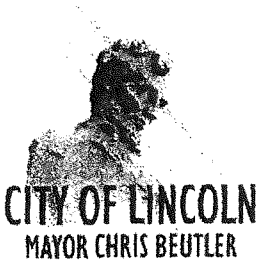

CITY OF LINCOLN
EXECUTIVE ORDER

NO. 083319

WHEREAS, there is concern over the inappropriate competitive advantages in the public bidding process for local publicly funded construction and delivery service contracts resulting from the misclassification of individuals performing construction labor services as "independent contractors" rather than "employees"; such "independent contractors" are commonly referred to as "1099 workers" due to the IRS form they receive rather than a W-4 which an employee receives;

WHEREAS, this misclassification of such individuals as "independent contractors" rather than as "employees" eliminates any obligation to pay these individuals legally required minimum or overtime wages, to provide legally required workers' compensation insurance, to make unemployment insurance payments, to pay legally required employment and payroll taxes, and to provide any other health, pension, or benefit such individuals would typically receive if properly classified as employees;

WHEREAS, this misclassification of individuals performing construction labor services for the contractor as "independent contractors" rather than "employees" is a violation of federal and state law, but is difficult to enforce once public construction or delivery service contracts have been bid, awarded, and entered into;

WHEREAS, the use of public funds to compensate contractors who unlawfully avoid their obligation to pay legally required minimum or overtime wages, to provide legally required workers' compensation insurance, to make unemployment insurance payments, to pay legally required employment and payroll taxes, and to provide any other health, pension, or benefit is not in the public interest; and

EXHIBIT D

WHEREAS, the Employee Classification Act, Neb. Rev. Stat. §§ 48-2901 to 48-2912 (effective July 15, 2010) provides that any contract entered into between a political subdivision and a contractor shall require that each contractor who performs construction or delivery service pursuant to the contract submit to the political subdivision an affidavit attesting that (1) each individual performing services for such contractor is properly classified under the Employee Classification Act, (2) such contractor has completed a federal I-9 immigration form and has such form on file for each employee performing services, (3) such contractor has complied with Neb. Rev. Stat. § 4-114 requirements that the contractor register and use a federal immigration employment verification system to determine the work eligibility status of new employees physically performing services in the State of Nebraska, (4) such contractor has no reasonable basis to believe that any individual performing services for such contractor is an undocumented worker, and (5) as of the time of the contract, such contractor is not barred from contracting with the state or any political subdivision pursuant to § 48-2912 of the Employee Classification Act.

NOW, THEREFORE, BY VIRTUE OF THE AUTHORITY VESTED IN ME by the Charter of the City of Lincoln, I hereby establish the following policy as to the bid and award of contracts to contractors for construction and delivery services with the City of Lincoln:

The Purchasing Agent shall immediately include in the City of Lincoln's notice to bidders for construction contracts that all contractors submitting bids in response to the notice shall affirmatively certify to the Purchasing Agent that all individuals hired to perform construction or delivery labor services for the contractor under the contract shall be properly classified as employees and not as independent contractors if the individual does not meet the requirements of an independent contractor under federal and state law (including the requirements of the State of Nebraska Employee Classification Act), and that the contractor will comply with all legal obligations with respect to these employees (including, but not limited to, minimum and overtime pay, workers' compensation, unemployment compensation, and payment of federal and state payroll taxes). The

EXHIBIT D

notice to bidders shall further provide that contractors may use affidavits required pursuant to the Employee Classification Act for this purpose, but that a failure to make the affirmative certification to the Purchasing Agent shall render the bidder ineligible for award of the contract.

The Purchasing Agent shall immediately include the following provisions in contracts for construction or delivery services:

(1) Contractor agrees that each individual performing services for the contractor shall be properly classified as an employee and not as an independent contractor if the individual does not meet the requirements of an independent contractor under the State of Nebraska's Employee Classification Act and that contractor shall comply with all legal obligations with respect to the employee (including, but not limited to, minimum and overtime pay, workers' compensation, unemployment compensation, and payment of federal and state payroll taxes).

(2) Contractor understands and agrees that failure to classify each individual hired to perform services under the contract as an employee rather than as an independent contractor if the individual does not meet the requirements of an independent contractor under the State of Nebraska's Employee Classification Act and/or failure to comply with legal obligations with respect to the employee (including, but not limited to, minimum and overtime pay, workers' compensation, unemployment compensation, and payment of federal and state payroll taxes) shall be considered a breach of the contract and is a grounds for rescission of the contract by the City.

(3) Contractor additionally agrees to include the following provisions in each subcontract entered into with a subcontractor as part of the contractor's contract with the City:

(a) Subcontractor agrees that each individual performing services for the subcontractor shall be properly classified as an employee and not as an independent contractor if the individual does not meet the requirements of an independent contractor under the State of Nebraska's Employee Classification Act and that subcontractor shall comply with all legal obligations with respect to the employee (including, but not limited to, minimum and overtime pay,

workers' compensation, unemployment compensation, and payment of federal and state payroll taxes).

(b) Subcontractor understands and agrees that subcontractor's failure to properly classify individuals hired to perform services under the subcontract as employees and not as independent contractors if the individual does not meet the requirements of an independent contractor under the State of Nebraska's Employee Classification Act and/or failure to comply with legal obligations with respect to the employee (including, but not limited to, minimum and overtime pay, workers' compensation, unemployment compensation, and payment of federal and state payroll taxes) shall be considered a breach of the contract and is a grounds for rescission of the subcontract by the contractor.

(4) Contractor agrees that if subcontractor fails to or is suspected of failing to properly classify each individual hired pursuant to the subcontract as an employee and not as an independent contractor if the individual does not meet the requirements of an independent contractor under the State of Nebraska's Employee Classification Act and/or fails to comply with legal obligations with respect to the subcontractor's employee, the contractor shall take appropriate corrective action including, but not limited to, reporting the suspected violation of the State of Nebraska Employee Classification Act to the Nebraska Department of Labor or rescission of the subcontract by the contractor. Written notification of the corrective action shall be submitted to the City of Lincoln Purchasing Department. Contractor understands and agrees that contractor's failure to take appropriate corrective action shall be considered a breach of the contractor's contract with the City of Lincoln and is a grounds for rescission of the contract by the City.

(5) The City of Lincoln shall notify the Nebraska Department of Labor of any contractor or subcontractor it has determined is in breach of contract due to the terms of this order.

(6) Any contractor or subcontractor who shall have been determined by the Nebraska Department of Labor to have knowingly provided a false affidavit to the City of Lincoln

under the State of Nebraska's Employee Classification Act shall be referred to the Purchasing Agent of the City who shall determine whether to declare such contractor or subcontractor an irresponsible bidder who shall be disqualified from receiving any business from the municipality for a stated period of time, in accordance with Lincoln Municipal Code § 2.18.030(n)(1) or (2).

(7) This policy does not prohibit a contractor or subcontractor from hiring individuals to perform construction labor services as independent contractors, provided that the contractor's or subcontractor's use of such individuals as an independent contractor complies with the criteria found in subdivision 5 of Neb. Rev. Stat. § 48-604 and is otherwise valid under federal and state law and is not intended to circumvent lawful obligations under federal and state law or city contractual requirements.

The City Clerk is directed to send a copy of this Executive Order to Vince Mejer, City Purchasing Agent, for his record.

Dated this 28 day of July, 2010.

Chris Beutler, Mayor of Lincoln

Approved as to Form & Legality:

City Attorney

EXHIBIT D

EMPLOYEE CLASSIFICATION ACT AFFIDAVIT

For the purposes of complying with THE NEBRASKA EMPLOYEE CLASSIFICATION ACT, I, _____, herein below known as the Contractor, state under oath and swear as follows:

1. Each individual performing services for the Contractor is properly classified under the Employee Classification Act.

2.The Contractor has completed a federal I-9 immigration form and has such form on file for each employee performing services.

3. The Contractor has complied with Neb Rev Stat 4-114.

4. The Contractor has no reasonable basis to believe that any individual performing services for the Contractor is an undocumented worker.

5. The Contractor is not barred from contracting with the state or any political subdivision pursuant to section 12 of this Act.

6. As the Contractor I understand that pursuant to the Employee Classification Act a violation of the Act by a contractor is grounds for rescission of the contract by the City. I understand that pursuant to the Act any contractor who knowingly provides a false affidavit may be subject to criminal penalties and upon a second or subsequent violation shall be barred from contracting with the City for a period of three years after the date of discovery of the falsehood.

I hereby affirm and swear that the statements and information provided on this affidavit are true, complete and accurate. The undersigned person does hereby agree and represent that he or she is legally capable to sign this affidavit and to lawfully bind the Contractor to this affidavit.

PRINT NAME: _____
(First, Middle, Last)

SIGNATURE: _____

TITLE: _____

State of Nebraska)
) ss.
County of _____)

This affidavit was signed and sworn to before me, the undersigned Notary Public, on this ____ day of _____, 20__.

_____
Notary Public

EXHIBIT D

Certified Statement Pursuant to Neb. Rev. Stat. § 77-1323

§ 77-1323 Every person, partnership, limited liability company, association, or corporation furnishing labor or material in the repair, alteration, improvement, erection, or construction of any public improvement shall furnish a certified statement to be attached to the contract that all equipment to be used on the project, except that acquired since the assessment date, has been assessed for taxation for the current year, giving the county where assessed.

Pursuant to Neb. Rev. Stat. § 77-1323, I, _____, do hereby certify that all equipment to be used on JPA Project/Bid No. _____, except that equipment acquired since the assessment date, has been assessed for taxation for the current year, in Lancaster County, Nebraska.

DATED this ____ day of _____, 20___.

By: _____

Title:_____

STATE OF NEBRASKA)
) ss.
COUNTY OF _____)

On _____, 20___, before me, the undersigned Notary Public duly commissioned for and qualified in said County, personally came _____, to me known to be the identical person, whose name is affixed to the foregoing instrument and acknowledged the execution thereof to be his voluntary act and deed.

Witness my hand and notarial seal the day and year last above written.

_____
Notary Public

(S E A L)

WH 13-11 Introduce: 1-24-13

RESOLUTION NO. WH- _____

BE IT RESOLVED by the Board of Representatives of the West Haymarket Joint Public Agency:

That the attached Amendment No. 2 to the November 1, 2011 Consultant Agreement for Extended Program Management Services and Extended Project Management Services between P.C. Sports and the West Haymarket Joint Public Agency to amend the Scope of Services to provide additional professional services in connection with two new parking garages (Decks 2 and 3) for the West Haymarket Redevelopment Project for a fixed fee of $360,000.00, is hereby approved and the Chairperson of the West Haymarket Joint Public Agency Board of Representatives is hereby authorized to execute said Amendment No. 2 on behalf of the West Haymarket Joint Public Agency.

The City Clerk is directed to return a fully executed original Amendment No. 2 and a copy of this Resolution to Rick Peo, Chief Assistant City Attorney, for transmittal to P.C. Sports.

Adopted this _____ day of January, 2013.

Introduced by:

_____

Approved as to Form & Legality:

_____
Legal Counsel for
West Haymarket Joint Public Agency

West Haymarket Joint Public Agency
Board of Representatives

_____
Chris Beutler, Chair

_____
Tim Clare

_____
Eugene Carroll

AMENDMENT NO. 2 TO NOVEMBER 1, 2011
P.C. SPORTS CONSULTANT AGREEMENT

THIS AMENDMENT NO. 2 is entered into this 24th day of January, 2013, by and between the West Haymarket Joint Public Agency, hereinafter referred to as "JPA" and P.C. Sports, hereinafter referred to as "Consultant."

The parties hereby agree that the Scope of Services attached to the Consultant Agreement dated November 1, 2011 be amended to add the attach Proposal to Provide West Haymarket Project Management Services – Two New Parking Garages (Decks 2 and 3) to be performed by Dimensional Innovations under a Subcontract with P.C. Sports for a fixed fee of $360,000.00.

IN WITNESS WHEREOF, Consultant and the JPA do hereby execute this Amendment No. 1 to Consultant Agreement as of the execution date set forth above.

WEST HAYMARKET JOINT
PUBLIC AGENCY,

By: _____
Chair

P.C. SPORTS

By: _____
Title:

WH 13-12 Introduce: 1-24-13

RESOLUTION NO. WH- _____

BE IT RESOLVED by the Board of Representatives of the West Haymarket Joint Public Agency:

That the Contract Agreement between the West Haymarket Joint Public Agency and Riley Manufacturing, pursuant to Bid No. 13-005, for procurement, delivery and setup of the Dasher Board System for Pinnacle Bank Arena, for the sum of $191,300.00 is hereby approved and the Chairperson of the West Haymarket Joint Public Agency Board of Representatives is hereby authorized to execute said Contract Agreement on behalf of the West Haymarket Joint Public Agency.

The City Clerk is directed to return a fully executed original Contract Agreement and a copy of this Resolution to Rick Peo, Chief Assistant City Attorney, for transmittal to Riley Manufacturing.

Adopted this _____ day of January, 2013.

Introduced by:

_____

Approved as to Form & Legality:

_____
Legal Counsel for
West Haymarket Joint Public Agency

West Haymarket Joint Public Agency
Board of Representatives

_____
Chris Beutler, Chair

_____
Tim Clare

_____
Eugene Carroll

WEST HAYMARKET JOINT PUBLIC AGENCY (JPA)

DASHER BOARD SYSTEM FOR PINNACLE BANK ARENA
Bid No. 13-005

THIS DASHER BOARD SYSTEM FOR PINNACLE BANK ARENA CONTRACT ("Contract") is made and entered into as of this _____ day of _____, 2013, by and between **RILEY MANUFACTURING,** hereinafter called "Provider," and the **WEST HAYMARKET JOINT PUBLIC AGENCY**, hereinafter called "JPA."

RECITALS

WHEREAS, JPA has caused to be prepared, in accordance with law, Specifications and other Contract Documents for the procurement, delivery and setup of the dasher board system and associated items herein described, including the delivery and setup, and has approved and adopted said documents and has caused to be published a Request for Proposals advertisement for and in connection with the Contract.

WHEREAS, the Provider, in response to such advertisement, has submitted to the JPA, in the manner and in the time specified, a sealed Supplier Response in accordance with the terms of said advertisement and the Specifications.

WHEREAS, JPA, in the manner prescribed by law, has publicly advertised, opened, examined, and canvassed the Supplier Responses submitted in response to such advertisement, and as a result of such canvass has determined and declared the Provider to be the lowest and best bidder for the furnishing, delivery and setup of the dasher board system and associated items for the sum of One Hundred Ninety-One Thousand Three Hundred and 00/100ths Dollars ($191,300.00). Copies of the Bid Opportunity Detail, Request for Proposals, Addendum Nos. 1 and 2, Specifications, Supplier Response as clarified by Supplier e-mail dated January 14, 2013 (collectively "Bid Documents") are attached hereto as Exhibit A.

WHEREAS, JPA desires to engage Provider for the procurement, delivery and setup of the dasher board system on the terms and conditions herein provided.

WHEREAS, Provider hereby represents that Provider is willing and able to furnish, deliver and setup the dasher board system and associated items in accordance with this Contract.

NOW, THEREFORE, in consideration of the above Recitals and the below mutual covenants and agreements the Parties hereto, the Provider and JPA do hereby agree as follows:

SCOPE OF SERVICES. The Provider shall procure, deliver, and setup the dasher board system and associated items as described in the Specifications prepared by the JPA and shall do everything required by this Contract. Provider shall furnish all labor, materials, equipment, services, shipping, loading, packing and cleanup that are necessary for the Provider's performance of this Contract.

COMPENSATION. JPA agrees to pay to Provider for the procurement, delivery and setup of the dasher board system the sum of $191,300.00 set forth in the Supplier Quotation and Provider agrees to accept said amount as full compensation therefor. Provider represents that the $191,300.00 includes Provider's payment for any and all royalties or costs arising from patents, trademarks, copyrights, and other similar intangible rights in any way involved with or related to the dasher board system or this Contract. Provider shall defend suits on claims for infringement or any patent, copyright, trademark or other intangible rights in any way related to this Contract.

TIME OF COMPLETION. The furnishing and ordering of the dasher board system under this Contract shall be commenced as soon as possible, provided that the Anchors shall be provided prior to January 30, 2013 and the dasher boards shall be delivered no later than July 1, 2013. Failure to meet the terms of the Contract on or before the Completion Date may result in forfeiture of the supply bond or deposit if any and shall be deemed a breach of this Contract.

INDEMNIFICATION. Provider agrees to defend, indemnify and hold harmless JPA to the same extent and under the same terms and conditions as required by the Indemnification and Insurance Requirements for All West Haymarket Joint Public Agency Contracts attached hereto as Exhibit B.

INSURANCE. Provider shall at all times during the term of this Contract purchase and maintain in place insurance coverage as required by the Indemnification and Insurance Requirements for All West Haymarket Joint Public Agency Contracts attached hereto as Exhibit B, except that the required commercial general liability coverage shall be reduced to $1,000,000 per occurrence and $2,000,000 aggregate. Provider agrees to provide all types of insurance required by the JPA. Provider will furnish coverages against any and all perils required by the JPA.

NON-RAIDING CLAUSE. Provider shall not engage the services of any person or persons presently in the employ of the JPA for work covered by this Contract without the written consent of the JPA.

TERMINATION OF CONTRACT.

A. This Contract may be terminated by the Provider if the JPA fails to adequately perform any material obligation required by this Contract ("Default"). Termination rights under this paragraph may be exercised only if the JPA fails to cure a Default within ten (10) calendar days after receiving written notice from the Provider specifying the nature of the Default.

B. The JPA may terminate this Contract, in whole or part, for any reason for the JPA's own convenience upon at least ten days written notice to the Provider.

If the Contract is terminated by either the JPA or Provider as provided in A or B above, Provider shall be paid for all services performed, and reimbursable expenses incurred, not to exceed the above-mentioned Contract amount, up until the date of termination.

Provider hereby expressly waives any and all claims for damages or compensation arising under this Contract except as set forth in this paragraph in the event of termination.

FAIR EMPLOYMENT. In connection with the performance of work under this Contract, Provider agrees that it shall not discriminate against any employee or applicant for employment with respect to compensation, terms, advancement potential, conditions, or privileges of employment, because of such person's race, color, religion, sex, disability, national origin, ancestry, age, or marital status in accordance with the requirements of Lincoln Municipal Code Chapter 11.08 and Neb. Rev. Stat. § 48-1122, as amended.

FAIR LABOR STANDARDS. The Provider shall maintain Fair Labor Standards in the performance of this Contract as required by Chapter 73, Nebraska Revised Statues, as amended.

ASSIGNABILITY. The Provider shall not assign any interest in this Contract, delegate any duties or work required under this Contract, or transfer any interest in the same (whether by assignment or novation), without the prior written consent of the JPA thereto; provided, however, that claims for money due or to become due to the Provider from JPA under this Contract may be assigned without such approval, but notice of any such assignment shall be furnished promptly to the JPA.

INTEREST OF PROVIDER. Provider covenants that Provider presently has no interest, including but not limited to, other projects or independent contracts, and shall not acquire any such interest, direct or indirect, which would conflict in any manner or degree with the performance of services required to be performed under this Contract. Provider further covenants that in the performance of this Contract, no person having any such interest shall be employed or retained by Provider under this Contract.

INDEPENDENT CONTRACTOR. The JPA is interested only in the results produced by this Contract. Provider has sole and exclusive charge and control of the manner and means of performance. Provider shall perform as an independent contractor and it is expressly understood and agreed that Provider is not an employee of the JPA and is not entitled to any benefits to which JPA employees are entitled, including, but not limited to, overtime, retirement benefits, workmen's compensation benefits, sick leave and/or injury leave.

NEBRASKA LAW. This Contract shall be construed and interpreted according to the laws of the State of Nebraska.

INTEGRATION. This Contract represents the entire agreement between the parties and all prior negotiations and representations are hereby expressly excluded from this Contract.

AMENDMENT. This Contract may be amended or modified only in writing signed by both the JPA and Provider.

SEVERABILITY. If any provision of this Contract shall be held to be invalid or unenforceable for any reason, the remaining provisions shall continue to be valid and enforceable. If a court finds that any provision of this Contract is invalid or unenforceable, but that by limiting such provision it would become valid and enforceable, then such provision shall be deemed to be written, construed, and enforced as so limited.

WAIVER OF CONTRACTUAL RIGHT. The failure of either party to enforce any provision of this Contract shall not be construed as a waiver or limitation of that party's right to subsequently enforce and compel strict compliance with every provision of this Contract.

FEDERAL IMMIGRATION VERIFICATION.

A. If the Provider is a business entity or corporation, then in accordance with Neb. Rev. Stat. §§ 4-108 through 4-114, the Provider agrees to register with and use a federal immigration verification system, to determine the work eligibility status of new employees performing services within the State of Nebraska. A federal immigration verification system means the electronic verification of the work authorization program of the Illegal Immigration Reform and Immigrant Responsibility Act of 1996, 8 USC 1324 a, otherwise known as the E-Verify Program, or an equivalent federal program designated by the United States Department of Homeland Security or other federal agency authorized to verify the work eligibility status of a newly hired employee pursuant to the Immigration Reform and Control Act of 1986. The Provider shall not discriminate against any employee or applicant for employment to be employed in the performance of this section pursuant to the requirements of state law and 8 U.S.C.A. 1324b. The Provider shall require any subcontractor to comply with the provisions of this section. For information on the E-Verify Program, go to www.uscis.gov/everify.

B. If the Provider is an individual or sole proprietor, the Provider agrees to complete the United States Citizenship Attestation Form as provided by the JPA and attach it to the Contract.

C. Public Benefits Eligibility Status Check. If the Provider is agreeing to determine eligibility for and provide a public benefit as public benefit is defined under Neb. Rev. Stat. §§ 4-108 through 4-114, the Provider agrees to have each applicant for public benefits attest that he or she is a U.S. citizen or qualified alien using the form attached. The Provider agrees to register and use the SAVE Program as required under Neb. Rev. Stat. §§4-108 through 4-114. If the applicant indicates he or she is an alien, the Provider shall verify the applicant's lawful presence in the United States as provided under the SAVE Program and retain all documentation and provide copies of such documentation at the JPA's request. For information on the SAVE program, go to www.uscis.gov/SAVE.

CONTRACT DOCUMENTS. The Contract Documents comprise the Contract and consist of the following, whether or not attached hereto:

1. Bid Documents – Exhibit A.
2. Indemnification and Insurance Requirements for all West Haymarket Joint Public Agency Contracts (approved March 2012) - Exhibit B.
3. Supply Bond – Exhibit C.
4. Other Non-Attached Contract Documents:
    a. Sales Tax Exempt Forms (to be provided upon award of the Special Purchase).
        i. Form of Nebraska Resale or Exempt Sales Certificate.

ii. Form of Purchasing Agent Appointment.
Note: Any portion of this project used for providing water service, such as pipe for water mains, are not tax exempt and are subject to sales and use tax.
Note: The remainder of this project, including items exclusively used for providing fire protection, such as fire hydrants, is exempt from sales and use tax.

iii. Plans and Arena Construction Schedule.

b. Any Bid Documents and/or Bid Attachments listed in the Bid Opportunity Detail not attached as part of Exhibit A.

This Contract, together with the other Contract Documents herein above mentioned, form this Contract and they are as fully a part of the Contract as if hereto attached or herein repeated.

The Contractor and JPA hereby agree that all the terms and conditions of this Contract shall, by these presents, be binding upon themselves, and their heirs, administrators, executors, legal and personal representatives, successors, and assigns.

REPRESENTATIONS. Each party hereby certifies, represents and warrants to the other party that the execution of this Contract is duly authorized and constitutes a legal, valid and binding obligation of said party.

IN WITNESS WHEREOF, Provider and JPA do hereby execute this Contract as of the Execution Date set forth above.

PROVIDER: **RILEY MANUFACTURING**

By: _____
Title: _____

JPA: **WEST HAYMARKET JOINT PUBLIC AGENCY**

By: _____
Chris Beutler, Chairperson of the West Haymarket Joint Public Agency Board of Representatives

EXHIBIT A

Bid Documents

CITY OF LINCOLN NEBRASKA

LANCASTER COUNTY NEBRASKA

Return to Login • Supplier Registration

Bid Opportunity Detail

Bid Number 13-005 Addendum 2 (Dasher Board System for Pinnacle Bank Arena)
Close Date & Time 1/4/2013 12:00:00 PM Central
Bid Duration 21 days 3 hours 1 minute 26 seconds

Bid Information

Bid Type	RFP
Issue Date & Time	12/14/2012 8:58:33 AM Central
Close Date & Time	1/4/2013 12:00:00 PM Central
Bid Status	Unsealed
Bid Notes	Please prepare your written response and return your proposals as instructed in the RFP according to the specifications. Respond to the Attribute and Line Items Sections of this electronic bid and submit before the closing date and time. If you have any questions on submitting your proposal, call 402-441-7410.

Contact Information

Contact Name	Vince Mejer
Address	Purchasing 440 S. 8th St. Lincoln, NE 68508 USA
Department	Purchasing
Floor/Room	Suite 200
Contact Phone	1 (402) 441-8314
Contact Fax	1 (402) 441-6513
Contact Email	vmejer@lincoln.ne.gov

Bid Documents

Document	Format	Description
Invitation Document	Adobe (PDF)	PDF Invitation to Bid
Bid Tabulation by Supplier Spreadsheet	Spreadsheet (XLS)	Bid Tabulation by Supplier Spreadsheet

Bid Attachments

Location	File Name	Description
Header	13-005adv.pdf (6KB)	Notice to Bidders
Header	13-005spec.pdf (132KB)	Specifications
Header	13-005_Attach_D.pdf (2.59MB)	Attachment D - Plans
Header	13-005_Attach_E.pdf (3.76MB)	Attachment E - Arena Construction Schedule
Header	Addendum No 1 dasher board.pdf (7KB)	Addendum No. 1
Header	Addendum No 2 dasher board.pdf (8KB)	Addendum No. 2

EXHIBIT A TO CONTRACT AGREEMENT

Advertise 1 time
Saturday, December 15, 2012

City of Lincoln/Lancaster County
West Haymarket Joint Public Agency
Request for Proposals
Bid No. 13-005

Sealed proposal will be received by the Purchasing Agent of the City of Lincoln/Lancaster County, Nebraska **BY ELECTRONIC BID PROCESS** until: **12:00 p.m, Friday, January 4, 2013** for providing the following:

Dasher Board System
for Pinnacle Bank Arena
Bid No. 13-005

Submitters must be registered on the City/County's E-Bid site in order to respond to the above Proposal. To Register go to: lincoln.ne.gov (type: e-bid - in search box, then click "Supplier Registration")

Upon e-mail notification of registration approval, you may go to the E-Bid site to respond to this proposal. Questions concerning this proposal process may be directed to City/County Purchasing at (402) 441-8314 or 441-7410 or vmejer@lincoln.ne.gov

EXHIBIT A TO CONTRACT AGREEMENT

Addendum No. 1
City of Lincoln/Lancaster County
West Haymarket Joint Public Agency
Request for Proposals
Bid No. 13-005

Addenda are instruments issued by the City prior to the date for receipt of offers which will modify or interpret the specification document by addition, deletion, clarification or correction.
Please acknowledge receipt of this addendum in the space provided in the Attribute Section. Be advised of the following changes and clarifications to the City's specification and bidding documents:

Q Can I assume that you will be buying acrylic later? Is the acrylic to be supported by posts?
  A Since we aren't doing hockey right now and since we don't need the glass at this time, we are forgoing purchasing the glass/plexiglass/acrylic/shielding. We do need the dashers to be built / supplied so that we can add glass/plexiglass/acrylic/shielding in the future.

Q In section 6, it indicates a qty of 8 lift outs, but in section 10, it indicates 16. Can you please clarify which number is correct?
  A The correct total is 8 lift out gates. Section 10 is incorrect.

Q After reviewing the Indemnification and Insurance Requirements we believe them to be excessive can they be changed?
  A On some contracts where the liability risk are not too great we have lowered general liability to the $1Million/$2million coverage amount under the city Insurance clause.

All other terms and conditions shall remain unchanged.

Issued December 28, 2012

Vince M. Mejer
Purchasing Agent

EXHIBIT A TO CONTRACT AGREEMENT

Addendum No. 2
City of Lincoln/Lancaster County
West Haymarket Joint Public Agency
Request for Proposals
Bid No. 13-005

Addenda are instruments issued by the City prior to the date for receipt of offers which will modify or interpret the specification document by addition, deletion, clarification or correction.
Please acknowledge receipt of this addendum in the space provided in the Attribute Section.

Be advised of the following changes and clarifications to the City's specification and bidding documents:

Q Can the Bid close date be extended 1 week until Jan. 11th, 2013 due to Holiday season?
A We would prefer to keep the bid date the same. See Item No. 2 response for further information.

Q According to Attachment "E" the construction schedule on page 7 it appears that the refrigerated slab will be poured in March. The anchors for the dasher boards are typically installed days before the slab is poured. Would it be acceptable to supply the anchors toward the end of February as this will allow time for drawing approval and product procurement?
A Mortenson will be doing a test ice slab in early February. This is the reason for the January 4th, 2013 bid date. If we extend to January 11th we will not make the January 24th JPA meeting to award the dasher boards.

Q The gate schedule in specifications 13-005 section 6 and drawing R4.0 are different. Please clarify which is correct?
A We are replacing 2 of the access gates from drawing R4 with 2 machine gates.

Q The gate schedule in specifications 13-005 section 6 calls for 8 liftout gates but section 10.8 requests pricing for a total of 16 gates. Will the 16 liftouts be in addition to the 8 or are 8 total required or are 16 total required?
A Correct answer is 8 lift out gates.

Q Specifications 13-005 section 8.5 calls for goal judge boxes. Are goal judge boxes required at either end of the rink? NHL does not use them anymore as they have video replay.
A We want goal judge boxes - this is not an NHL arena.

Q Specifications 13-005 section 9 calls for panel storage carts but does not indicate a quantity required. Should enough carts be supplied for the entire system including Arena Football panels or will there only be certain sections of the rink taken down? Please clarify quantity.
A We need enough storage carts to store all of the dasher boards. We do not have a full time hockey or football team so all of the dashers will be in storage at the same time.

Q Specifications 13-005 section 7.6 calls for ice-side release mechanisms on gates with shielding. Should ice-side release mechanisms be added to all gates except the player gates for possible future shielding or should the ice-side release mechanisms be left out?
A Ice side release should be on the gates for player benches and penalty boxes.

Q Specifications 13-005 section 8.5 calls for NHL regulation boxes. Is this to include raised aluminum framed floors, rubber, benches and timer's table?
A Yes.

Q Will the entire project be net 30 billing terms or can we bill for items as they are completed. (IE-anchors) Net 30 billing terms.
A Net 30

Q Bid form 13-005 page 3 item 5 calls for a lump sum price for Spectator Attic Stock cart. are carts required and if so how many?
A These are for the shielding we are not getting so these are not needed.

All other terms and Conditions shall remain unchanged.

Issued December 28, 2012

Vince M. Mejer
Purchasing Agent

DASHER BOARD SYSTEM
FOR
PINNACLE BANK ARENA

SPECIFICATIONS
RFP No. 13-005

1. DASHER BOARD SYSTEM REQUIREMENTS

1.1 The successful Bidder shall furnish all labor, materials and equipment necessary to perform and complete the work called for in the specifications.

1.2 The Bidder understands that all materials furnished shall be new and the best of their respective kinds, unless otherwise specified.

1.3 The items specified shall be manufactured by Athletica, or approved equal.

1.4 Installation and Training

- 1.4.1 Manufacturer shall provide at no cost to the owner, a qualified representative during the initial dasher board installation to instruct the owner's personnel on the proper assembly, disassembly, moving and storage.
- 1.4.2 Specification – Submit manufacturers complete system specification sheets.
- 1.4.3 Samples for Initial Selection for color and material.
- 1.4.4 Samples for Verification for final approval of color and material (to be approved at contract signing).
- 1.4.5 The successful dasher bidder will be required to provide shop drawings for the anchors and Dasher Board System for review and approval.
- 1.4.6 The successful dasher bidder will be required to provide an electronic copy of as-builts upon completion of the anchors and Dasher Board System.
- 1.4.7 Maintenance Literature – Upon completion of Dasher Board installation, provide "Assembly and Disassembly – Storage and Care" Guide to the owner or individuals in charge and responsible for the upkeep of the Dasher Board system.

2. SCOPE OF WORK

2.1 The Scope of Work shall include, but not be limited to the following:

- 2.1.1 Provide shop drawings for the anchors and dasher board.
- 2.1.2 Install anchors into concrete.
- 2.1.3 Factory prefabricated structural aluminum frames.
- 2.1.4 Plastic covering.
- 2.1.5 Gates and hardware.
- 2.1.6 Storage carts.
- 2.1.7 Complete installation and equipment testing.
- 2.1.8 All other components as described herein.

3. ANCHOR INSTALLATION

3.1 The successful dasher bidder will be required to coordinate the installation of the dasher system with the floor contractor.

- 3.1.1 Anchors shall be provided prior to the pouring of the new refrigerated floor which is expected to occur January 30, 2013.
- 3.1.2 It will be the responsibility of the successful dasher bidder to provide field measurements and assist the floor contractor with the placement of all dasher anchors (hockey configuration only).
- 3.1.3 Once the floor has cured the successful dasher bidder shall coordinate the installation of the complete dasher system as per Dasher Manufacturer as authorized by Owner.

3.2 Anchors are to be installed on the refrigerated slab.

- 3.2.1 Anchor install shall take place prior to Dasher System installation as per Dasher Manufacturer as authorized by Owner.

3.3 The dasher contractor shall furnish all 5/8" precast anchors required for the installation of the dasher boards.

- 3.3.1 Dasher contractor shall furnish a layout drawing showing exact location of anchor placement.
- 3.3.2 Anchors to be installed by the dasher board manufacturer.
- 3.3.3 All anchoring of the panels are to be approximately 4'-0" on center.
- 3.3.4 Anchors installed in refrigerated slab shall receive Dasher System Steel Ice Dam (technical specs included herewith).
- 3.3.5 Dasher panels shall be anchored to Steel Ice Dam.

EXHIBIT A TO CONTRACT AGREEMENT

4. **DASHER SYSTEM (Exclusive of Glazing)**

4.1 Dimensions: 200'L x 85' W x 28' radius 44" H (2" steel ice dam, 41" frames, 1" top cap).

4.2 Additional boards will be required to square corners for arena football, 200'L x 85' W.

4.3 Panel lay out will be configured to have 2 removable panels (totaling 14'-8") centered at the end of the rink to accept Soccer Goals.

5. **PANELS**

5.1 Dasher panels should be fabricated in demountable sections of 8' lengths.

5.1.1 The design of panels, whether straight section, curved section, or section in which gate is located should be fundamentally similar.

5.2 Aluminum Components: Sections to be used in construction of the welded frame shall be approximately;

5.2.1 Top Front Stringer (horizontal) – One (1) 1/2" x 3" x 1/8" tube.

5.2.2 Middle Front Stringer (horizontal) – One (1) 1/2" x 3" x 1/8" tube.

5.2.3 Bottom Stinger Front and Back (horizontal) – One (1) 1/2" x 3" x 3/16" channel.

5.2.4 End Plates (vertical) - 1/4" x 6" extrusions, c/w 1-1/2" perimeter fastening plates front and back.

5.2.4.1 Three (3) ¾" diameter matching holes are to accommodate 5/8" diameter through bolts.

5.2.5 End Plates at Gates (vertical) - 1/4" x 6" extrusions, c/w 1-1/2" perimeter fastening plates on the front side and 3" plates backside for mounting hardware.

5.2.5.1 Intermediate Post (vertical) - One (1) 1/2" x 3" x 1/8".

5.2.5.2 Top Back Stringer (horizontal) - 3" x 1-1/2" x 1/8".

5.2.5.3 Middle Back Stringer (horizontal) – 1-1/2" x 1-1/2" x 1/8".

5.2.5.4 Perimeter Fastening Plates (vertical) - 3/16" x 1-1/2" Flat Bar.

5.3 Aluminum is to be alloy 6005A-T6, or equal.

5.4 4-1/2" x 4" x 1/2" anchor plates (aluminum) are to be confined between two (2) 1-1/2" x 3" x 3/16" channels turned inward, allowing lateral movement for anchor positioning, but preventing anchor plates from disengagement from frame during storage and handling.

5.4.1 Plates are to have 3/4" holes punched in the center.

5.5 Vertical end plates are to be punched with three (3) 3/4" diameter matching holes to accommodate 5/8" diameter through bolts.

5.6 Welding rod is to be continuous feed 4043 alloy, or equal, .045 in diameter, all surface welds are to be ground smooth, all corners are to be ground to 90 degrees.

6. **ALUMINUM COMPONENTS TO MEET ASTM B221 AND FEDERAL SPECIFICATION QQA200-9**

ITEM	SIZE	QUANTITY	LOCATION
Access Gates	36" wide	1	Southeast Corner
Player Gates	2' 6" wide	10	2 per Player Bench, 1 each Penalty box, 1 into Scorer's box from penalty and 1 into each camera box.
Machine Gate	10' wide	3	Northeast Corner, Northwest and Southwest corners
Lift Out Gates	4' wide	8	3 on West Aisles, 3 on East Aisles, 2 on South Aisles Access Gates
Football	36" wide	2	Northeast and Southwest Corner Machine Gate
Football	10' wide	2	Northwest and Southeast Corner

Gate locations will be coordinated with Seating Firm

7. **GATE CONSTRUCTION/HARDWARE**

7.1 Player Gates ("Man"), Access Gates and Machine Gates shall be of similar construction to End Plates at Gates (vertical) 1/4" x 6" extrusions, c/w 1-1/2" perimeter fastening plates on the front side and 3" plates backside for mounting hardware.

7.2 All metal hardware is to be plated or galvanized.

7.3 Player Gate hinges are to be 10 gauge steel, continuous piano type on gates with no glass or lift-off self-lubricating pin type on gates with glass.

7.4 Access Gate hinges are to be heavy-duty adjustable lift off type.

7.5 Player Gate latches are to be 3/8" x 2" strap steel, easily opened with a gloved hand with a downward movement.

7.6 Ice-side release mechanisms shall be equipped on all Player and Access Gates with glazing.

7.7 Heavy-duty spring loaded, phenolic tired, adjustable casters are to be equipped on each leaf of doors 48" and over in width.

7.8 Closure bars are to be sliding type, manufactured from 2" diameter solid steel rod secured to left leaf of Access Gate, which slides into 2" schedule 80 pipe brackets mounted on opposite leaf.

7.8.1 Handle on closure bar is to turn down to avoid excessive protrusions on back of Dashers.

7.8.2 Two (2) closure bars per gate are to be used.

7.9 All fasteners are to be zinc plated. Fasteners are to be color matched where necessary.

8. OTHER DASHER SYSTEM RELATED

8.1 Board Facing: The Board Facing shall be high impact; integrally colored, high density polyethylene shall be .50" thick.

8.2 Kick Plate: The Kick Plate shall be 8" high and .50" thick high-density polyethylene. The Kick Plate is to inlaid flush with the white polyethylene facing.

8.2.1 The Kick Plate shall be fastened to the bottom of the dasher panel using stainless steel 1/4" x 1-3/4" Phillips flat head machine screws tapped into bottom stringer.

8.2.2 The heads of screws should be painted to match the Kick Plate. Color is to be yellow.

8.3 Cap Rail: The Cap rail shall be 7" wide and 1" thick. Color is to be red.

8.4 Line Markings: Official line markings 12" red and blue and 2" red shall be carried vertically up to the face of the boards in such a fashion that they are flush and interrupt the "Stay White" surface completely from the ice to the bottom of the Cap Rail.

8.5 Players, Penalty, Goal Judges and Timekeepers Boxes/Benches: It is intended that each vendor provide dimensions for these areas as per National Hockey League rules and regulations. Boxes / Benches shall be complete with drink rail.

8.6 Threshold:

8.6.1 Players Gates: High-density polyethylene skate threshold shall be 1" (25 mm) thick and 7" (175 mm) wide to cover the entire width of all door openings with raised thresholds 9" high (225 mm) total above finished floor.

8.6.1.1 Fasteners are to be counter-sunk 1/2" (12 mm) deep.

8.6.2 Access Gates: High density, stress relieved polyethylene skate threshold shall be 1" (25 mm) thick and 7" (175 mm) wide to cover the entire width of all door openings at low thresholds 6" high total (100 mm) above finished floor.

8.6.3 Equipment Gates: 2" high steel ice dam.

8.7 Gap closure:

8.7.1 .375" thick x 9" wide polyethylene shelf to be installed inside the boards and extending 3"out of the back of the boards for the entire perimeter of the rink including boxes.

8.7.1.1 This is to close off the gap between the Dasher Boards and seating.

8.7.2 An additional 1 ½" x 1 ½" x 1/8" horizontal aluminum tube to be weld in the back of the boards to support the shelf.

9. PANEL STORAGE CARTS

9.1 The panel storage carts will be fabricated with structural framing members having four (4) casters welded to them.

9.1.1 Framing shall have rust resistant painted finish.

9.2 The carts will be 96" long by 54" wide.

9.2.1 The carts will have removable side supports used to keep panels in line.

9.3 Total weight capacity of each cart is approximately 5,000 pounds.

10. LIFT-OUT PANEL

10.1 Lift out panels shall be installed in areas required by the Owner.

10.2 These lift-out panels shall leave a 48" wide x 33-1/4" high opening and shall have replaceable 1" high-density polyethylene threshold.

10.3 These lift-out panels will be similar in design to the standard gate panel construction.

10.4 Lift out is fastened to the dasher section via a 1" polyethylene-interlocking blocks.

10.5 Panel to be lifted no more than 6" for easy removal without the use of tools or mechanical fasteners.

10.6 The locations are to be at each aisle from seating.

10.7 Follow-up meeting(s) will identify exact locations.

10.8 At this time the vendor should bid on sixteen (16) total locations.

11. **ICE RETAINER**

11.1 Steel (2" x 6"):

11.1 2" x 8.2 #/ft. x 6" (50mm x 8.2 #/ft. x 150 mm) steel ice dam, complete with 1/2" (12 mm) color matched polyethylene attached to the ice side of the channel.

11.1.1 The poly facing shall be attached every 9" on center using ¼" diameter nylon nails.

11.2 The steel channel shall be corrosion protected using a rust inhibiting paint.

11.3 1 ½" Rigid SM insulation shall be cut to size and friction fit to the underside of the ice dam to minimize condensation buildup.

11.3.1 The insulation shall be bonded in place using construction adhesive on at front and back edge of channel.

11.3.2 All voids around anchor locations shall be filled with expanding urethane foam.

11.4 Each 8' ice dam section shall include two 1/2" x 4" slotted anchor plates welded in to the underside of the channel.

11.4.1 The slotted steel plate locations are utilized to secure the ice dam to the existing concrete floor anchors using 5/8" x 1 ½" hex head cap screws.

11.4.2 The anchors are to be approximately 1 every 4' on center.

11.5 Four 5/8" diameter threaded inserts shall be welded to the underside of the steel channel to provide dasher board anchoring locations in each 8' section.

11.5.1 Two of the threaded inserts are to be used and two of the locations are spares in case of future anchor damage during use.

12. TRANSISTION RAMPS

12.1 Ramp is to be high density, stress relieved polyethylene threshold material.

12.2 Ramps are to be the width of the gate opening x 48" wide.

12.3 Ramps are to be tapered down from 2" high to ¼" high over a 48" span.

12.4 Ramps are to follow the radius contour of the equipment gate threshold.

13. COMPANY INFORMATION

13.1 Provide company history for Dasher Board System in the Stadium and Arena industry, including years of operation and client/employee growth.

13.2 Provide information on five (5) recent projects of similar size or scope that have completed by your company.

13.2.1 Provide the project name and a client point of contact for each with name, title, and address and phone number.

13.3 Describe the firm's ability to support the schedule and delivery requirements.

13.3.1 Describe the firm's customer support program for resolution of warranty items.

14. PROJECT DESCRIPTION

14.1 Owner: West Haymarket JPA (Joint Public Agency)

14.2 JPA Program Manager: PC Sports

14.3 Arena Operator: SMG Management / SAVOR

14.4 Project Architect: DLR Group

14.5 Arena Contractor: Mortenson Construction

14.6 Project location:

Pinnacle Bank Arena
600 R Street
Lincoln, NE 68508

14.7 Type of Construction:

14.7.1 The project consist of a 16,000 seat arena of approximately five levels to include Event Level, Main Concourse, Premium Suite Level, Upper Concourse and the catwalk level.

14.7.2 The attached garage is approximately 280 spaces and is a three-level precast structure.

15. CONTRACT

15.1 The Vendor contract will need to be approved by the JPA at a formal board meeting.

15.1.1 A notice to proceed will follow the approval.

16. QUALIFICATIONS

16.1 All products must include a one (1) year warranty free from manufacturing defects.

16.2 All proposers must state the location that the proposed products are manufactured, assembled or produced.

16.3 The manufacturer must have an established reputation in the line with the equipment proposed.

16.4 The manufacturer must list five (5) similar type facilities that have opened in the past three (3) years in which the proposed product is currently in use.

16.5 All Vendors submitting bids must comply with the insurance requirements included as Attachment "C".

17. SHIPMENT OF PRODUCT

17.1 Shipment of product is to be coordinated with the Arena Operator, PC Sports and Mortenson Construction.

17.2 Product must be delivered:

17.2.1 Anchors prior to January 30, 2013.

17.2.2 Dasher Boards by July 1, 2013.

18. EXAMINATION

18.1 Make a careful examination of the site, and investigate, at no cost or risk to the Owner, all matters relating to the nature of the work to be undertaken, the means of access and egress thereto and therefrom, the obstacles to be met with the rights and interests of which may be interfered with during the construction of the work.

18.2 Make a careful examination of the extent of the work to be performed and all matters which are referred to in the drawings, specifications, and contract documents or which are necessary for the full and proper construction of the work and the conditions under which it will be performed.

19. SECURITY

19.1 Access will be restricted only to those having business on the site.

20. USE OF WORK AREA

20.1 Delivery of supplies, equipment and/or materials to the site shall be along routes designated by the Arena Contractor or Arena Operator.

20.2 The Vendor must obtain prior approval from the Owner or his representative of areas proposed for temporary storage, stockpiling, equipment, maintenance or operations.

20.3 Working areas shall be chosen by the Owner or his representative in cooperation with the Arena Contractor.

20.4 The Vendor shall be responsible for repairing, at no cost to the Owner, all damages caused by the work of the Contract.

21. DISCREPANCIES AND OMISSIONS

21.1 The Vendor finding discrepancies in, or omissions from the drawings, specifications or other documents, or having any doubt as to meaning or intent of any part thereof, shall at once notify the JPA's Purchasing Agent in writing, he will send written instructions in the form of an Addendum.

21.2 Direct inquiries to:

Vince M. Mejer
440 S. 8th Street, Suite 200
Fax: 402.441.6513
VMejer@lincoln.ne.gov

22. ORAL INSTRUCTIONS

22.1 Bids shall not contain any recapitulation of work to be done.

22.2 No oral or telephonic bids or modifications will be considered.

22.3 Neither the Owner nor the JPA Program Manager shall be responsible for oral instructions.

23. ERRORS IN BIDS

23.1 Owner will not entertain requests for gratuitous payments arising from errors alleged to have been made in Bid that he has accepted.

24. DIRECTIONS

24.1 Completely fill in all blank spaces in Proposal Bid Form.

24.2 State in numbers.

24.3 Completed pricing shall be without interlineations, alterations or erasures.

25. ALTERNATIVE, SEPARATE AND ITEMIZED PRICES

25.1 Where separate and itemized prices are requested, it is agreed that such prices may be accepted at any time within a period of ninety (90) days after closing date for prices.

26. CO-OPERATION, CONSTRUCTION AND INTERFACING WITH OTHER CONTRACTORS

26.1 Insure that all trades co-operate with each other to insure that work will be carried out expeditiously and will be satisfactory in all respects at completion.

26.2 Insure that all examine the Plans and Specifications covering the work of all other sections.

26.3 This Vendor shall coordinate his work with the work of other Contractors at the site and shall not commit or permit any act which will interfere with the performance of the work of other Contractors.

- 23.3.1 Where this Vendor's work adjoins that of other Contractors, he /she shall confer with them as required and so arrange his/her work that there shall be no discrepancies when the whole work is completed.
- 23.3.2 If this Vendor fails to cooperate with or coordinate his work with the work of other contractors, he/she shall not make any claim founded on delays which have resulted from such failure and he/she shall save the Owner harmless from all claims made by other Contractors which are founded on delays caused by such failure.

26.4 If any part of the work depends on its proper execution or results upon the work of other contractors, this Vendor shall report promptly to the Owner in writing of any defects in the work of such other Contractors that interfere with the proper execution of the work.

26.5 Should the Vendor fail to inspect and report, he/she shall have no claim against the Owner by reason of defective or unfinished work of any other Contractor except as to latent defects no reasonably observable at the time of the commencement of the Vendor's work.

26.6 The Vendor shall be responsible for any and all damages caused by his or her negligence or failures to coordinate his/her work with that of other Contractors and any additional expenses arising therefrom.

26.7 There may be other Contractors or forces of the Owner working in the same area where work under this Contract will be performed.

- 26.7.1 The Owner or his designated representative will use his or her best efforts to assist with coordination of work of all Contractors so as to minimize interference with or suspension of work of any other Contractor.
- 26.7.2 These coordination efforts shall be consistent with orderly and expeditious performance and completion of the project as a whole.

26.8 The Vendor must anticipate that this work may be interfered with or suspended from time to time on account of concurrent performance of the work by other contractors.

- 26.8.1 This Vendor shall, if requested by the Owner of his designated representative, arrange his work under the Contract with the work being performed by other Contractors.
- 26.8.2 Furthermore, the Owner or his designated representative may direct that certain facilities be used mutually by the Contractor and other persons.

26.9 Prior to the commencement of the work, the Vendor accompanied by the Owner or his designated representative, shall inspect all previous works executed by other trades and shall report his approval promptly in writing.

26.10 If any part of the work executed is unsatisfactory, this Vendor shall so report in writing to the Owner or his designated representative prior to the commencement of his/her work.

26.11 If the necessity for corrective work is established, the Owner or his designated representative will proceed with these corrections.

26.12 All Scope of Work for this Package will need to be coordinated with the main arena contractor's schedule (Mortenson).

- 26.12.1 This will be done in more detail once a Vendor is selected and delivery/install timelines are established.
- 26.12.2 Refer to Attachment "E" for the current Arena Construction Schedule.

26.13 The plans relating to this RFP are provided as Attachment "D".

27. BID SUBMITTAL REQUIREMENTS

27.1 Submit seven (7) copies of your proposal on or before the date and time established for receiving proposals.

- 27.1.1 Submit your proposals to:

Vince M. Mejer, Purchasing Agent
City of Lincoln
440 South 8th Street, Suite 200
Lincoln, NE 68508

27.1.2 Indicate the RFP number and Firm Name on the outside of the sealed proposal.

27.1.3 Proposers must also complete and submit the electronic portion (Attributes and Line Item sections) of this proposal on the E-bid system.

27.1.3.1 The electronic response of this proposal will include information such as proposal requirements and addendum acknowledgments.

27.1.3.2 Electronic submittal must be submitted before the closing date and time of this RFP.

27.2 All inquiries regarding these specifications shall be directed to Vince Mejer, Purchasing Agent, via e-mail request to vmejer@lincoln.ne.gov or faxed request to 402-441-6513.

27.2.1 These inquiries and/or responses shall be distributed to prospective Vendors electronically as addenda.

27.2.2 The Purchasing Office shall only reply to written inquiries received within five (5) calendar days of bid opening.

27.3 No direct contact is allowed between Vendor and other City or JPA Staff through the bid process.

27.3.1 Failure to comply with this directive may result in the Vendor bid being rejected.

28. SUBCONTRACTORS

28.1 Bidders shall list the names of any Subcontractor upon whose proposals this bid is based.

28.2 We recognize that the list of Subcontractors shall be considered in the selection of the successful bidder.

28.3 Bids will not be accepted unless accompanied by a complete list of Subcontractors and that no names either of Subcontractors, Contractor or "Own Forces" may be changed after submission of bid, unless good and sufficient cause is submitted in writing and written approval received from the Owner and Consultant.

25.4 The list of Subcontractors shall be attached to the Response Attachments section of the E-bid system.

29. THE BIDDER HEREBY DECLARES THAT IT:

29.1 Is thoroughly familiar with the provision of the Bid documents and conditions at the Site, and has had the opportunity to receive and/or review all reference reports and documents related to Site conditions;

29.2 Has the equipment, technical ability, experience reference, personnel and facilities to properly complete, coordinate and administer the Contract, should it be awarded to it, in accordance with Contract Departments;

29.3 Is of the opinion that the Contract Documents are appropriate and adequate for the construction/completion of this Project;

29.4 Has the expertise and experience to perform the Work in conformance with the Contract Documents and requires no additional information.

City of Lincoln/Lancaster County (Lincoln Purchasing)
Supplier Response

Bid Information		Contact Information		Ship to Information	
Bid Creator	Lori L. Irons	Address	Purchasing 440 S. 8th St. Lincoln, NE 68508	Address	
Email	lirons@lincoln.ne.gov				
Phone	(402) 441-7416				
Fax	(402) 441-6513	Contact	Vince Mejer	Contact	
Bid Number	13-005 Addendum 2	Department	Purchasing	Department	
Title	Dasher Board System for Pinnacle Bank Arena	Building	Suite 200	Building	
Bid Type	RFP	Floor/Room		Floor/Room	
Issue Date	12/14/2012	Telephone	1 (402) 441-8314	Telephone	
Close Date	1/4/2013 12:00:00 PM CST	Fax	1 (402) 441-6513	Fax	
Need by Date		Email	vmejer@lincoln.ne.gov	Email	

Supplier Information

Company	Riley Manufacturing
Address	5-460 Industrial Ave Woodstock, ON N4S 7L1
Contact	Sean Riley
Department	
Building	
Floor/Room	
Telephone	1 (519) 5394830 225
Fax	1 (519) 5395006
Email	sean@rileymfg.com
Submitted	1/2/2013 10:10:35 AM CST
Total	$178,100.55

Signature _____

Supplier Notes

Thank you for the opportunity to submit this proposal. We will our firm would be a great fit for this project. All items and materials quoted are North American made.

Bid Notes

Please prepare your written response and return your proposals as instructed in the RFP according to the specifications. Respond to the Attribute and Line Items Sections of this electronic bid and submit before the closing date and time. If you have any questions on submitting your proposal, call 402-441-7410.

Bid Activities

Bid Messages

Please review the following and respond where necessary

EXHIBIT A TO CONTRACT AGREEMENT

#	Name	Note	Response
1	Instructions to Bidders	I acknowledge reading and understanding the Instructions to Bidders.	Yes
2	Insurance Requirements	I acknowledge reading and understanding the Insurance Requirements.	Yes
3	Specifications	I acknowledge reading and understanding the specifications and drawings/plans.	Yes
4	Performance/Payment Bonds	I acknowledge that a Performance Bond and a Payment Bond each in the amount of 100% of the Contract amount will be required with the signed contract upon award of this job.	Yes
5	Tax Exempt Certification Forms	Materials being purchased in this bid are tax exempt and unit prices are reflected as such. A Purchasing Agent Appointment form and a Exempt Sales Certificate form shall be issued with contract documents. (Note: State Tax Law does not provide for sales tax exemption for proprietary functions for government, thereby excluding the purchases of pipes to be installed in water lines and purchase of water meters.)	Yes
6	Proposal Submission	I have prepared and delivered/mailed to the City Purchasing Agent seven (7) copies of my proposal as requested in the Specifications along with submitting this electronic response.	Yes
7	Contact	Name of person submitting this bid:	Sean Riley
8	Electronic Signature	Please check here for your electronic signature.	Yes
9	Agreement to Addendum No. 1	Respondent hereby certifies that the change set forth in this addendum has been incorporated in their proposal and is part of their bid. Reason: See Bid Attachments section for Addendum information.	Yes
10	Agreement to Addendum No. 2	Respondent hereby certifies that the change set forth in this addendum has been incorporated in their proposal and is part of their bid. Reason: See Bid Attachments section for Addendum information.	Yes

Line Items

#	Qty	UOM	Description	Response
1	1	Lump Sum	Dasher System - to include but not limited to: w/Player, Penalty, Boxes, Arena Football Square Corners, etc.	$153,330.00
	Item Notes:			
	Supplier Notes: This lump sum price excludes all of the line items below.			
2	1	Lump Sum	Ice Retainer (2" x 6" Steel)	$22,000.00
	Item Notes:		It is intended for each vendor to submit the adequate number of units for their particular system.	
	Supplier Notes: 1 Full rink (200′ x 85′ x R28)			
3	1	Lump Sum	Panel Storage Carts	$955.55
	Item Notes:		It is intended for each vendor to submit the adequate number of units for their particular system.	
	Supplier Notes: You will require a total of 14 carts to store all ice side panels and arena football panels at the same time.			
4	1	Lump Sum	Lift out Panels	$385.00
	Item Notes:		It is intended for each vendor to submit the adequate number of units for their particular system.	
	Supplier Notes: It was indicated in Addendum # 1 that 8 are required.			
5	1	Lump Sum	Spectator Shield Attic Stock Cart (Vertical)	$0.00
	Item Notes:		It is intended for each vendor to submit the adequate number of units for their particular system.	
	Supplier Notes: Excluded in Addendum # 2			
6	1	Lump Sum	Transition Ramp at Machine Gate	$1,430.00
	Item Notes:			
	Supplier Notes: 3 Ramps will be required. 1 for each machine gate location on the ice side boards.			
			Response Total:	$178,100.55

EXHIBIT A TO CONTRACT AGREEMENT

Rick R. Peo

From: Canda <canda@projectcontrol.com>
Sent: Thursday, January 17, 2013 11:41 AM
To: Rick R. Peo
Cc: Vince Mejer; Debbie Winkler; Paula Yancey
Subject: FW: Verification

Rick,

Below is the confirmation email from Riley that the unit cost was confirmed and the contract amount should be $191,300.
Please let me know if you need anything further.

Thank you,

Canda Jellenc
Executive Project Manager
PC Sports
311 N. 8th Street, Suite 102
Lincoln, NE 68508
402-477-0487 office
210-288-7747 cell
canda@projectcontrol.com
www.pcsports1.com

From: Sean Riley [mailto:sean@rileymfg.com]
Sent: Monday, January 14, 2013 9:47 AM
To: Vince Mejer
Subject: Re: Verification

Hi Vince,

Yes, the prices indicated on the electronic sheet were unit costs. The price all in is $191,300. The qty required for each was also indicated.

Please do not hesitate to call or email with further questions.

Thanks,

Sean Riley
Riley Manufacturing
800-265-3588 ext: 225
www.rileymfg.com

On 2013-01-14, at 9:45 AM, Vince Mejer <vmejer@lincoln.ne.gov> wrote:

Please verify the following cost listed in your proposal:

Storage Carts is the cost listed a unit price or total price?

Lift-out panels is the cost listed a unit price or total price?

Transition ramp is the price listed a unit price or total price?

Please respond as soon as possible.

Vince M. Mejer
440 S. 8th St., Suite 200
Lincoln, NE 68502
402-441-8314
Fax 402-441-6513

<image001.jpg>

CONFIDENTIALITY NOTICE: This e-mail message, including any attachments, is for the sole use of the intended recipient(s) and may contain confidential and privileged information. Any unauthorized review, use, disclosure or distribution is prohibited. If you are not the intended recipient, please contact the sender by reply e-mail and destroy all copies of the original message.

CONFIDENTIALITY NOTICE: This e-mail message, including any attachments, is for the sole use of the intended recipient(s) and may contain confidential and privileged information. Any unauthorized review, use, disclosure or distribution is prohibited. If you are not the intended recipient, please contact the sender by reply e-mail and destroy all copies of the original message.

EXHIBIT B

Indemnification and Insurance Requirements for all West Haymarket Joint Public Agency Contracts (approved March 2012)

INDEMNIFICATION AND INSURANCE REQUIREMENTS
FOR ALL WEST HAYMARKET JOINT
PUBLIC AGENCY CONTRACTS

1. INDEMNIFICATION

A. **Indemnification of JPA**

TO THE FULLEST EXTENT PERMITTED BY LAW, CONTRACTOR SHALL RELEASE, INDEMNIFY, DEFEND AND HOLD HARMLESS JPA AND JPA'S MEMBERS, SUCCESSORS, ASSIGNS, LEGAL REPRESENTATIVES, OFFICERS, EMPLOYEES AND AGENTS FOR, FROM AND AGAINST ANY AND ALL CLAIMS, LIABILITIES, FINES, PENALTIES, COSTS, DAMAGES, LOSSES, LIENS, CAUSES OF ACTION, SUITS, DEMANDS, JUDGMENTS AND EXPENSES (INCLUDING, WITHOUT LIMITATION, COURT COSTS AND ATTORNEYS' FEES) OF ANY NATURE, KIND OR DESCRIPTION OF ANY PERSON (INCLUDING, WITHOUT LIMITATION, THE EMPLOYEES OF THE PARTIES HERETO) (COLLECTIVELY, "LIABILITIES") ARISING OUT OF, RESULTING FROM OR CAUSALLY RELATED TO (IN WHOLE OR IN PART), PERFORMANCE OF THE CONTRACT THAT RESULTS IN BODILY INJURY, SICKNESS, DISEASE, OR DEATH CAUSED IN WHOLE OR IN PART BY ANY ACT OR OMMISSION OF THE CONTRACTOR, ANY SUBCONTRACTOR, ANYONE DIRECTLY OR INDIRECTLY EMPLOYED BY ANY OF THEM, OR ANYONE FOR WHOSE ACTS ANY OF THEM MAY BE LIABLE WHETHER OR NOT IT IS CAUSED IN WHOLE OR PART BY A PARTY INDEMNIFIED HEREUNDER.

Such indemnification shall not be construed to negate, abridge, limit or otherwise reduce any other right or obligation of indemnity which would otherwise exist as to any party or person described in this section.

B. In any and all claims by any employee (whether an employee of the Contractor or subcontractor, or their respective agents or assigns or by anyone directly or indirectly employed by any of them or anyone for whose acts any of them may be liable as an employer) in whole or in part against JPA, its officers, agents, employees, volunteers or consultants, the above indemnification shall not be limited in any way by the amount of damages, compensation, benefits or other contributions payable by or on behalf of a the employer under Worker's Compensation statutes, disability benefit acts, or any other employee benefit or payment acts as the case may be.

C. The obligations of indemnification herein shall not include or extend to:

(1) Any outside engineer's or architect's professional errors and omissions involving the approval or furnishing of maps, drawings, opinions, reports, surveys, change orders, designs or specifications within the scope of professional services provided to JPA and related to the Contract; and

(2) Any claims wholly caused by the JPA's sole negligence and excluding claims to the extent such claims are caused by the willful misconduct or gross negligence of the JPA.

D. In the event of any litigation of any such claims shall be commenced against JPA, Contractor shall defend the same at Contractor's sole expense upon notice thereof from JPA. Contractor shall notify the insuring company that JPA reserves and does not waive any statutory or governmental immunity and neither Contractor, nor Contractor's counsel whether employed by Contractor or by an insurer on behalf of the Contractor shall waive such defenses or enter into any settlement or other disposition requiring waiver of any defenses or immunity of JPA without the express written consent of the JPA.

2. INSURANCE GENERAL PROVISIONS

A. **Approved Coverage Prior to Commencing Work/Subcontractors Included.** Contractor shall purchase and maintain in place insurance to protect Contractor and JPA, its officers, agents, employees, volunteers and consultants from and against all liabilities and hazards as provided in these insurance requirements throughout the duration of the Contract. Contractor shall not commence work under this contract until the Contractor has obtained all insurance required under Section 2. below and such insurance has been approved by the City Attorney for JPA, nor shall the Contractor allow any subcontractor to commence work on any subcontract until all similar insurance required of the subcontractor has been so obtained and approved.

B. **Occurrence Basis Coverage.** All insurance shall be provided on an occurrence basis and not on a claims made basis, except for hazardous materials, errors and omissions, or other coverage not reasonably available on an occurrence basis; provided that all such claims made coverage is subject to the prior written approval of the City Attorney and must be clearly indicated as such in any certificate showing coverage.

C. **Authorized and Rated Insurers Required.** All insurance coverage are to be placed with insurers authorized to do business in the State of Nebraska and must be placed with an insurer that has an A.M. Best's Rating of no less than A:VII unless specific approval has been granted by the City Attorney.

D. **Certificates Showing Coverage**. Prior to commencing the Work, Contractor must furnish to JPA adequate written documentation including certificate(s) of insurance, which have the original signature of the authorized representative, declaration pages or other acceptable policy information evidencing the required coverage, endorsements, and amendments. The policy(ies) must contain a provision that obligates the insurance company(ies) issuing such policy(ies) to notify JPA in writing at least 30 days prior to any cancellation, except that only ten (10) days prior notice is required for cancellation due to nonpayment of premium. Upon request from JPA, a certified duplicate original of any required policy must be furnished. Certificate(s) should be sent to the following address:

West Haymarket Joint Public Agency
c/o City Attorney
City of Lincoln, Nebraska
555 South 10th Street
Lincoln, NE 68508

Certificates of insurance may utilize an appropriate standard ACORD Certificate of Insurance form showing the specific limits of insurance coverage required by this Article; provided that restrictions, qualifications or declarations inconsistent with the requirements of this Article shall not relieve the Contractor from providing insurance as required herein. Such certificates shall show JPA as additional insured except for applicable Worker's Compensation coverage, to include all work performed for JPA and specifically including, but not limited to, any liability caused or contributed to by the act, error, or omission of the Contractor, including any related subcontractors, third parties, agents, employees, officers or assigns of any of them. The inclusion of JPA as additional insured shall be for coverage only on a primary basis for liability coverage, and no coverage shall contain a policy or other restriction or attempt to provide restricted coverage for JPA, whether on an excess, contributory or other basis regardless of any other insurance coverage available to JPA, including by specific endorsement where necessary, as indicated in the following requirements.

E. **Terminology.** The terms "insurance," "insurance policy," or "coverage" as used in this article are used interchangeably and shall have the same meaning as "insurance" unless the context clearly requires otherwise. References to "ISO®" forms are merely for convenience and ease of reference, and an equivalent or better form as determined acceptable by the City Attorney may be used. (Note: ISO® is a registered trademark of ISO Properties, Inc.)

F. **Other Requirements**. Contractor agrees to waive its right of recovery against JPA for all claims and suits against JPA, except for claims and suits arising wholly out of the sole negligence, or to the extent caused by the gross negligence or willful misconduct, of JPA. In addition, its insurers, through the terms of the policy or policy endorsement, waive their right of subrogation against JPA for all claims and suits, except for claims and suits arising wholly out of the sole negligence, or to the extent caused by the gross negligence of willful misconduct, of JPA. The certificate of insurance must reflect the waiver of subrogation endorsement. Contractor further waives its right of recovery, and its insurers also waive their right of subrogation against JPA for loss of its owned or leased property or property under Contractor's care, custody or control, except for the right of recovery or right of subrogation arising wholly out of the sole negligence, or to the extent caused by the gross negligence or willful misconduct, of JPA.

Contractor is not allowed to self-insure without the prior written consent of JPA. If granted by JPA, any deductible, self-insured retention or other financial responsibility for claims must be covered directly by Contractor in lieu of insurance. Any and all JPA liabilities that would otherwise, in accordance with the provisions of this Agreement, be covered by Contractor's insurance will be covered as if Contractor elected not to include a deductible, self-insured retention or other financial responsibility for claims.

Upon notification to JPA of cancellation, non-removal, substitution or material alteration of any such policy(ies), JPA shall have the option to (i) if feasible, pay, on behalf of the Contractor, any and all such premiums, penalties, fees for expenses necessary to keep such policy(ies) in full force and effect; or (ii) in the event that such policy(ies) cannot be kept in full force and effect, enter into the open market to procure such policy(ies) of insurance on behalf of Contractor as required by this Agreement at the then current market rate. Upon any of the above occurrences, JPA shall invoice the Contractor for reimbursement of such premiums, penalties, fees, or expenses advanced on the JPA's behalf plus an additional fifteen percent (15%) of such advanced amounts as remuneration for JPA's overhead. Such amounts advanced by JPA shall be paid by the Contractor within thirty (30) days after delivery of a statement for such expense.

Contractor represents that this Agreement has been thoroughly reviewed by Contractor's insurance agent(s)/broker(s), who have been instructed by Contractor to procure the insurance coverage required by this Agreement. Allocated Loss Expense must be in addition to all policy limits for coverages referenced above.

If any portion of the operation is to be subcontracted by Contractor, Contractor must require that its subcontractors provide and maintain the insurance coverages set forth herein, naming JPA as an additional insured, and requiring that the subcontractors release, defend and indemnify JPA to the same extent and under the same terms and conditions as Contractor is required to release, defend and indemnify JPA herein.

Failure to provide evidence as required by Section 2. will entitle, but not require, JPA to immediately suspend work under this Agreement until such evidence is provided. Acceptance of a certificate that does not comply with this section will not operate as a waiver of Contractor's obligations hereunder. The fact that insurance (including, without limitation, self-insurance) is obtained by Contractor will not be deemed to release or diminish the liability of Contractor including, without limitation, liability under the indemnity provisions of this Agreement. Damages recoverable by JPA will not be limited by the amount of the required insurance coverage.

3. INSURANCE REQUIREMENTS

A. **Scope of Required Coverage.** The Contractor shall take out and maintain during the life of the Contract such insurance in the forms and minimum amounts as specified in this Section and as will protect Contractor and JPA from the following claims arising out of or resulting from or in connection with the Contractor's operations, undertakings or omissions directly or indirectly related to the Contract, whether by the Contractor or any Subcontractor or anyone directly or indirectly employed by any of them, or by anyone for whose acts any of them may be liable:

(1) Claims under workers' compensation, disability benefit, or other employee benefit acts;

(2) Claims arising out of bodily injury, occupational sickness or disease, or death of an employee or any other person;

(3) Claims customarily covered under personal injury liability coverage;

(4) Claims other than to the work itself arising out of an injury to or destruction of tangible property, including the loss of use resulting therefrom;

(5) Claims arising out of ownership, maintenance or use of any motor vehicle;

(6) Railroad protective liability coverage in the event the contract involves work to be performed within 50 feet of any railroad property and affecting any railroad bridge or trestle, tracks, road beds, tunnel, underpass or crossing.

B. **Worker's Compensation Insurance and Employer's Liability Insurance.** The Contractor shall provide applicable statutory Worker's Compensation Insurance with minimum limits as provided below covering all Contractor's employees, and in the case of any subcontracted work, the Contractor shall require the subcontractor similarly to provide Worker's Compensation Insurance for Subcontractor's employees. This policy shall contain the following endorsement or language: "Waiver of subrogation in favor of JPA."

The Contractor shall provide Employer's Liability Insurance with minimum limits as provided below placed with an insurance company authorized to write such insurance in all states where the Contractor will have employees located in the performance of this contract, and the Contractor shall require each Subcontractor similarly to maintain Employer's Liability Insurance on the Subcontractor's employees.

Coverage	**Listing**	**Min Amt**	**Notes**
Worker's Comp.			
	State	Statutory	
	Applicable Federal	Statutory	
Employer's Liability			
	Bodily Injury by accident	$500,000	each accident
	Bodily Injury by disease	$500,000	each employee
	Bodily Injury	$500,000	policy limit

C. **Commercial General Liability Insurance.**

(1) The Contractor shall provide Commercial General Liability Insurance in a policy form providing broad form contractual liability no less comprehensive and no more restrictive coverage than provided under the ISO® form CG00010798 or newer with standard exclusions "a" through "o" and with minimum limits as provided below.

Coverage	Min Amt	Notes
General	$5,000,000/$10,000,000	Each Occurrence/Aggregate
Products and Completed Operations	$5,000,000/$10,000,000	Each Occurrence/Aggregate
Personal and Advertising Injury	$5,000,000/$10,000,000	Each Occurrence/Aggregate
Fire Damage Limit	$ 100,000	any one fire
Medical Damage Limit	$ 10,000	any one person

(2) The required Commercial General Liability Insurance shall also include coverage for the following:

- Bodily injury and property damage.
- Fire legal liability
- Coverage for all premises and operations.
- Personal and advertising injury.
- Operations by independent contractors.
- X.C.U. Coverage including coverage for demolition of any building or structure, collapse, explosion, blasting, excavation and damage to property below the surface of ground.
- Any fellow employee exclusions shall be deleted.
- Coverage shall not contain an absolute pollution exclusion, and applicable remaining coverage shall apply for pollution exposures arising from products and completed operations.
- Coverage for products and completed operations maintained for duration of work and shall be maintained for a minimum of three years after final acceptance under the Contract or the warranty period for the same whichever is longer, unless modified in any Special Provisions.
- Liability coverage which shall include contractually assumed defense costs in addition to any policy limits.
- Contractual liability coverage.

(3) This policy shall also include the following endorsements which shall be indicated on the Certificate of Insurance.

- The definition of insured contract shall be amended to remove any exclusion or other limitation for work being done within 50 feet of railroad property.
- Endorsement to provide the general aggregate per project endorsement.
- Endorsement to provide waiver of subrogation in favor of and acceptable to JPA.
- Endorsement to provide that the policy shall be primary and non-contributory with respect to any insurance carried by the JPA.
- Separation of insureds.
- Additional insured endorsement in favor of and acceptable to the JPA.

(4) If work is to be performed within 50 feet of any railroad property and affecting any railroad bridge or trestle, tracks, road beds, tunnel, underpass or crossing, Railroad Contractual Liability Endorsement (ISO® form CG24170196 or newer). The definition of insured contract shall be amended to remove any exclusion or other limitation for any work done within fifty (50) feet of railroad property.

D. **Vehicle liability insurance coverage.**

The Contractor shall provide reasonable insurance coverage for all owned, non-owned, hired and leased vehicles. This insurance shall contain a combined single limit of at least $1,000,000 per occurrence, and include coverage for, but not limited to the following:

- Bodily injury and property damage
- Any and all vehicles owned, used or hired

This policy shall also contain the following endorsements or language, which shall be indicated on the certificate of insurance:

- Waiver of subrogation in favor of and acceptable to JPA.
- Additional insured endorsement in favor or and acceptable to JPA.
- Separation of insureds.
- The policy shall be primary and non-contributing with respect to any insurance carried by JPA.
- Endorsements to include contractual liability coverage and delete any fellow employee exclusion.
- If specifically required in the Special Provisions, the required coverage shall also include an endorsement for auto cargo pollution (ISO® form CA 99 48).

E. **Umbrella/Excess Insurance.** At the Contractor's option, the Commercial General Liability Insurance coverage limits specified in Section 3.C. above may be satisfied with a combination of primary and Umbrella/Excess Insurance.

F. **Railroad Protective Liability.** If work is to be performed within 50 feet of any railroad property and affecting any railroad bridge or trestle, tracks, road beds, tunnel, underpass or crossing or otherwise required by the Special Provisions or applicable requirements of an affected railroad, the Contractor shall provide Railroad Protective Liability Insurance naming the affected railroad/s as insured with minimum limits for bodily injury and property damage of $5,000,000 per occurrence, $10,000,000 aggregate, or such other limits as required in the Special Provisions or by the affected railroad. The original of the policy shall be furnished to the railroad and a certified copy of the same furnished to the City Attorney's office prior to any related construction or entry upon railroad premises by the Contractor or for work related to the Contract.

The policy shall be issued on a standard ISO form CG 00 35 10 93 and include the following endorsements:

- Endorsed to include the Pollution Exclusion Amendment (ISO form CG 28 31 10 93)
- Endorsed to include the Limited Seepage and Pollution Endorsement.

No other endorsements restricting coverage may be added. The original policy must be provided to Railroad prior to performing any work or services under this C&M Agreement.

In lieu of providing a Railroad Protective Liability Policy, Contractor may participate in ANY RAILROAD'S Blanket Railroad Protective Liability Insurance Policy available to JPA and JPA Contractors.

G. **Special Provision.** At the JPA's option, the minimum insurance requirements specified above may be increased or decreased by special provision in a JPA contract.

4. CONTRACTOR'S INSURANCE FOR OTHER LOSSES.

A. Contractor shall assume full responsibility for all loss or damage from any cause whatsoever to any tools owned, rented or used in connection with the Contract including any tools, machinery, equipment, storage devices, containers, sheds, temporary structures, staging structures, scaffolding, fences, forms, braces, jigs, screens, brackets, vehicles and the like owned or rented by Contractor, or Contractor's agents, subcontractors, suppliers, or employees.

B. In connection with the above, Contractor shall cause or require any applicable insurance related to physical damage of the same to provide a waiver of a right of subrogation against JPA.

5. NOTIFICATION IN EVENT OF LIABILITY OR DAMAGE.

A. The Contractor shall promptly notify JPA in writing and provide a copy of all claims and information presented to any of Contractor's insurance carrier/s upon any loss or claim or upon any occurrence giving rise to any liability or potential liability related to the Contract or related work. The notice to JPA shall include pertinent details of the claim or liability and an estimate of damages, names of witnesses, and other pertinent information including the amount of the claim, if any.

B. In the event JPA receives a claim or otherwise has actual knowledge of any loss or claim arising out of the Contract or related work and not otherwise known to or made against the Contractor, JPA shall promptly notify the Contractor of the same in writing, including pertinent details of the claim or liability; Provided, however JPA shall have no duty to inspect the project to obtain such knowledge, and provided further that JPA's obligations, if any, shall not relieve the Contractor of any liability or obligation hereunder.

6. PROPERTY INSURANCE/ BUILDER'S RISK.

A. The Contractor shall provide property insurance (a/k/a Builder's Risk or installation Floater) on all Projects involving construction or installation of buildings or structures and other projects where provided in the Special Provisions. Such insurance shall be provided in the minimum amount of the total contract sum and in addition applicable modifications thereto for the entire work on a replacement cost basis. Such insurance shall be maintained until JPA completes final acceptance of the work as provided in the Contract. Such insurance shall be written and endorsed, where applicable, to include the interests of JPA, Contractor, Subcontractors, Sub-subcontractors in the related work. The maximum deductible for such insurance shall be $5,000 for each occurrence, which deductible shall be the responsibility of the Contractor. Such insurance shall contain a "permission to occupy" endorsement.

B. All related Property Insurance shall be provided on a "Special Perils" or similar policy form and shall at a minimum insure against perils of fire including extended coverage and physical loss or damage including without limitation or duplication of coverage: flood, earthquake, theft, vandalism, malicious mischief, collapse, and debris removal, including demolition whether occasioned by the loss or by enforcement of applicable legal or safety requirements including compensation or costs for JPA's related costs and expenses (as owner) including labor required as a result of such loss.

C. All related Property Insurance shall include coverage for falsework, temporary buildings, work stored off-site or in-transit to the site, whether in whole or in part. Coverage for work off-site or in-transit shall be a minimum of 10% of the amount of the policy.

D. The Contractor's Property Insurance shall be primary coverage for any insured loss related to or arising out of the Contract and shall not be reduced by or coordinated with separate property insurance maintained by JPA.

EXHIBIT C

Supply Bond

Bond No. _____

SUPPLY BOND

KNOW ALL MEN BY THESE PRESENTS:

That we, **Riley Manufacturing**, as **Principal**, and _____, a corporation organized under the laws of the State of _____ and authorized to transact business in the State of Nebraska, as **Surety**, are held and firmly bound unto the **West Haymarket Joint Public Agency,** as **Obligee**, in the penal sum of One Hundred Ninety-One Thousand Three Hundred and 00/100ths Dollars ($191,300.00), lawful money of the United States of America and to the faithful payment of which, well and truly to be made, we bind ourselves, our heirs, executors, and administrators (or, assigns), firmly by this presents.

THE CONDITION OF THE ABOVE OBLIGATION IS SUCH, That:

WHEREAS, Principal has entered into the West Haymarket Joint Public Agency (JPA) Dasher Board System For Pinnacle Bank Arena Contract ("Contract") dated _____, 2013, (an original of which is on file in the Office of the City Clerk of the City of Lincoln, Nebraska) which provided for the procurement, delivery and setup of the dasher board system as set forth in the Request for Proposals Specifications.

NOW, THEREFORE, if Principal shall timely procure, deliver and set up the dasher board system in accordance with the Contract, as require the execution of this Supply Bond, then this obligation shall become void, otherwise to remain in full force and effect. In the event Principal shall be declared by the Obligee to be in default under the above obligation, the Obligee may relet or otherwise complete the purchase, delivery and set up of the c dasher board system. Surety shall promptly indemnify and save harmless the Obligee to the limit of the penal amount of this bond from any loss, including but not limited to the Obligee's reasonable cost of such reletting or completion including the increased cost, if any, for the purchase, delivery and setup of the dasher board system and delay damages due to the Principal's failure to timely procure, deliver and set up the dasher board system.

Signed and dated this ____ day of _____, 2013.

Riley Manufacturing, Principal

By: _____
Name: _____
Title: _____

_____, Surety

By: _____
Title: Attorney-in-Fact

(Accompany this Bond with Attorney-in-Fact's authority from Surety to execute this bond, certified to include the date of the Bond)