AGENDA FOR THE WEST HAYMARKET JOINT PUBLIC AGENCY (JPA)
TO BE HELD FRIDAY JANUARY 6, 2012 AT 3:00 P.M.

CITY-COUNTY BUILDING
555 S. 10TH STREET
CITY COUNCIL CHAMBERS ROOM 112
LINCOLN, NE 68508

1. Introductions and Notice of Open Meetings Law Posted by Door (Chair Beutler)

2. Public Comment and Time Limit Notification Announcement (Chair Beutler)

   Individuals from the audience will be given a total of 5 minutes to speak on specific items listed on today's agenda. Those testifying should identify themselves for the official record.

3. Approval of the minutes from the JPA meeting held December 20, 2011 (Chair Beutler)
   - (Staff recommendation is for the JPA Board to approve the minutes as presented)

4. West Haymarket Progress Report (Paula Yancey)
   - Public Comment

5. Approval of Payment Registers (Steve Hubka)
   - Public Comment
   - (Staff recommendation is for the JPA Board to approve the payment registers)

6. Review of the November 2011 Expenditure Reports (Steve Hubka)
   - Public Comment

7. Bill No. WH 12-01 Resolution authorizing the City Clerk to make nunc pro tunc corrections to clerical errors in Resolution No. WH 00202. (Esposito)
   - Public Comment
   - (Staff recommendation is for the JPA Board to approve the resolution)

8. Bill No. WH 12-02 Resolution approving the Title Sponsorship Agreement between Pinnacle Bank and the West Haymarket Joint Public Agency. (Marvin)
   - Public Comment
   - (Staff recommendation is for the JPA Board to approve the resolution)

9. Bill No. WH 12-03 Resolution approving Amendment No. 11 to the Agreement for Engineering Services between Olsson Associates dba Lincoln Haymarket Infrastructure Team and the West Haymarket Joint Public Agency, Haymarket Infrastructure Design Project No. 870000, to include the addition of Civic Art consultation to the project, to delete Geotechnical Analysis that was for the Breslow Ice Center, and adjustments on hourly rates for the 2012 calendar year. (Yancey)
    - Public Comment
    - (Staff recommendation is for the JPA Board to approve the resolution)

10. Bill No. WH 12-04 Resolution approving the Consultant Agreement between the West Haymarket Joint Public Agency and Don Herz to render professional assistance in developing and refining cash flow and financing models and analysis. (Hubka)
    - Public Comment
    - (Staff recommendation is for the JPA Board to approve the resolution)

11. Bill No. WH 12-05 Resolution approving a Contract between the West Haymarket Joint Public Agency and TCW Construction Inc. to perform PCB Remediation of the Alter Sliver. (Esposito)
    - Public Comment
    - (Staff recommendation is for the JPA Board to approve the resolution)

12. Bill No. WH 12-06 Resolution approving Amendment No. 5 to the Environmental Remediation Services Contract with Benesch & Company. (Esposito)
    - Public Comment
    - (Staff recommendation is for the JPA Board to approve the resolution)

13. Bill No. WH 12-07 Resolution approving Third Amendment to Escrow Agreement between BNSF Railway Company, West Haymarket Joint Public Agency and U.S. National Bank to modify the Escrow Agent's duties with respect to verification that any BNSF requested charges in disbursements of assets on banking instructions have been authorized by BNSF. (Hubka)
    - Public Comment
    - (Staff recommendation is for the JPA Board to approve the resolution)

14. Set Next Meeting Date: Friday January 20, 2012 at 3:00 in City Council Chambers Room 112

15. Motion to Adjourn

WEST HAYMARKET JOINT PUBLIC AGENCY (JPA)
Board Meeting
December 20, 2011

Meeting Began At: 2:05 P.M.

Meeting Ended At: 2:55 P.M.

Members Present: Chris Beutler, Eugene Carroll, Tim Clare

Item 1 - Introductions and Notice of Open Meetings Law Posted by Door

Chair Beutler opened the meeting with introductions of the Board members. Beutler advised that the open meetings law is in effect and is posted in the back of the room.

Item 2 – Public Comment and Time Limit Notification

Beutler stated that individuals from the audience will be given a total of five minutes to speak on specific items listed on today's agenda. Those testifying should identify themselves for the official record and sign in.

Item 3 – Approval of the minutes from the JPA meeting held December 8, 2011

Beutler asked for corrections or changes to the minutes from December 8, 2011. Hearing none, Carroll motioned for approval of the minutes. Clare seconded the motion. Motion carried 3-0.

Item 4 – Bill No. WH 11-92 Resolution authorizing the Chair of the West Haymarket Joint Public Agency Board of Representatives to enter into a special purchase for construction of the Amtrak platform to construct a 1200' x 15' x 8" concrete passenger platform without building or canopy, subject to the submission of informal quotes by contractors by December 6, 2011. Work shall begin on December 9, 2011 and shall be completed by April 30, 2011

Beutler asked Rick Peo to come forward to present the contract and provisions and Chris Connolly to discuss the ADA issue.

Peo stated that when this item was originally put on the agenda for approval in early December they were still waiting on quotes from contractors so this item was pulled and delayed until this meeting. In the interim, the quotes were evaluated and Stephens and Smith came in with the low bid. A revised resolution was submitted to the Board for approval of the contract. After preparing the final contract documents for publication, Peo discovered that some of the requirements included in the bid documents were incorrect. Due to the fact that this property is owned by Burlington Northern, leased by Amtrak and subleased by the JPA; the JPA has an obligation to abide by the requirements included in the sublease and construction maintenance agreements. In addition to those provisions, the insurance amounts had to be increased to meet the railroad requirements. The contract agreement has been revised under Motion to Amend No. 2 as it was unfair to burden Stephens and Smith with the additional costs that were not in the bid documents. The original bid proposal of $565,499 will

be increased by $22,620 for a contract sum of $588,119 and will also allow for a construction contingency of an additional $22,620 in the event that the extra insurance costs are in excess of the contract sum. The contractor's contingency fund is only for those types of overriding costs. If they aren't needed, that money will not be spent and will be retained by the JPA. The bottom line is an overall maximum under all circumstances of $610,739, but Peo is hopeful that it will only be $588,119.

The final completion date for this project will be April 30, 2012. In order to accommodate Burlington Northern work that needs to be done, the substantial completion will be April 1, 2012. Clare asked if the procedure used to procure this contract was done fairly and pursuant to the bidding rules. Peo answered yes and noted that even with the increases Stephens and Smith is still the low bidder. Clare then asked where the bid came in with regards to the budget. Peo stated that this project was initially budgeted at over a million dollars.

Chris Connolly, City Law Department, came forward and reported that they have been reviewing the ADA issue for two months as it is a sensitive issue. The bottom line is that the JPA is in full compliance with the 2010 ADA standards, which is the latest those standards have come out. The JPA will also be in compliance with the Federal Railroad Administration (FRA) if this contract is approved and construction is started before February 1, 2012. Connolly explained that the Amtrak Station will be moved approximately 700 feet to the west to make room for the other projects and to provide better access to the arena. The original schedule was for the platform and building to be constructed in mid to late spring of 2012 because Burlington Northern was not going to be able to move their tracks until early spring. Burlington Northern was able to complete that work early this fall allowing the platform and building construction to move forward more quickly.

The 2010 ADA standards call for the platform to be a minimum of 8 inches above top of track which is what the platform design standards include. This is important to Burlington Northern as they will continue to operate freight on the tracks. There is no reference in the ADA standards to 15 inches as has been discussed. The FRA regulations that came out in October state that platforms newly constructed after February 1, 2012, must be 15 inches if the track is not being shared with freight operations. If construction was held off until after February 1, 2012, Amtrak would have to submit an accessibility plan to the FRA and they would have to review and approve it. This process could take weeks or months affecting the construction schedule. Aside from the schedule, there is a cost savings with not having to pour an additional 7 inches of concrete. Burlington Northern has stated that they need this track for their freight operations and a 15 inch platform would not work for them. There are safety concerns with switchmen riding on the back of cars when they move rail cars and also maintenance equipment that would strike a 15 inch platform. Amtrak is also on board with the 8 inch platform and they stand ready to use whatever equipment is necessary to allow people with wheelchairs to get on their trains.

Beutler noted that Burlington Northern submitted a letter stating they are going to use the tracks for freight. Connelly noted that they are submitting that letter to the FRA to let them know that is what they intend to do. Beutler then questioned if the rule would apply to this project if it were constructed after February 1st. Connelly advised that it could apply if the FRA did not accept Amtrak's accessibility plan. In the preamble to the rule they reference the ADA in general but also acknowledge this won't work in all circumstances. In fact, they admit that in regard to freight rail operations, they don't have authority to tell Burlington Northern that they must allow a 15 inch platform. It is Connelly's opinion that this regulation does not apply to this platform because it involves not only Amtrak but Burlington Northern and Burlington Northern cannot be forced to

accept that situation.

Peo added that the JPA does not have the unilateral authority to change the platform from 8 inches to 15 inches. The sublease agreement with Amtrak specifically requires the platform to only be 8 inches above top of rail and the agreements with BNSF requires them to approve all construction activity. They have mandated the 8 inches above top of rail as a requirement of their prime lease which is incorporated in the sublease with Amtrak. Clare asked if timing wasn't an issue and construction waited would the FRA come to the conclusion that the JPA is in compliance with the ADA with an 8 inch platform. Connelly stated that the FRA will not analyze the station in terms of ADA but only with compliance of their rule. As long as Burlington Northern says they are going to use it for freight they have no jurisdiction or authority to tell Burlington Northern they have to accept a 15 inch platform. The JPA is currently in compliance with the ADA and the 15 inch rule is not an ADA rule so that won't change if the February 1 deadline isn't met.

Carroll asked if the railroad establishes the elevation of the tracks of which the 8 inch platform is based on. Peo answered yes and explained that the design was approved almost two years ago and the 8 inch platform was established at that time.

Beutler asked for public comments. Dr. Barbara Traudt came forward and stated that the construction company and the railroad are following the 2010 ADA rules even though new rules are going into effect on February 1, 2012 saying that platform has to be 15 inches. The rules say that passengers with disabilities must be able to access each train car. Americans with disabilities are more important than the building schedule. It is also a waste of taxpayer's money because it should be built right the first time. Beutler thanked Dr. Traudt and asked her to speak with Chris Connolly after the meeting so that he could explain the situation in more detail so that although she may disagree, there will be some understanding as to why the City is doing what it is doing.

Jo Feller came forward and stated that there is no question the platform has to stay at 8 inches because it is used for freight but her concern is with what is going to be used to comply with the new rules. The ADA law states that every car at the platform has to be accessible to everyone. Beutler stated that reasonable accommodation is the requirement and something they are happy to provide. He also asked Feller to stay after the meeting to continue this discussion with Chris Connolly.

Jane Kinsey came forward and stated that it has been her experience that the owner of a property has to meet the ADA requirements even if they don't like it. The law is in favor of the disabled person so that needs to be looked at carefully. Kinsey asked if the JPA has gotten an outside opinion from an attorney who is an expert in ADA law. The City attorneys have looked at this but they have a bias and the City could be sued by the ADA for this.

John R. Judds, CEO of Judds Brothers Construction Company came forward and stated that his company was asked during the completion of the initial site prep to prepare an estimate for the Amtrak platform. Utilizing the team they had in place that knew the railroad insurance requirements, rail safety requirements and the exhibit that was going to be signed by BNSF they put together what he felt was a good estimate. Subsequently, the City had to legally go a different way and put it out for bid. Judds was surprised that after all of the projects that have been bid on this site that a contractor could still not know the insurance that is required and be able to come back and get more money. Early in the first job, Osborn was able to get more money for insurance on its contract. Judds stated that he always bids the right amount in his initial bids because he understands the rules but he is surprised that someone else is coming back and saying they need $45,000 more for

insurance when the documents should be boiler plate. He didn't know if Purchasing or the Legal Department made the mistake but thinks there should be more consistency between the two departments.

Hearing no other comments, Carroll made a motion to approve WH 11-92. Clare seconded the motion. Carroll then made a motion to approve Amendment No. 2. Clare seconded the motion. Motion carried 3-0. WH 11-92 as amended was then voted on and carried 3-0.

Item 5 – Bill No. WH 11-94 Resolution authorizing the Chair of the West Haymarket Joint Public Agency Board of Representatives to enter into a Contract with the lowest responsible bidder for construction of the Amtrak station and canopy over the platform

Dan Marvin informed the Board that in 2009 there was a long negotiation process to create a replacement building for Amtrak. The agreement was to provide them with a building that was similar in nature to the building they currently operate out of. Design work began in the summer of 2009 and the lease agreement was approved by this Board in January 2010. Under the terms of the lease the JPA was to deliver a 90% complete design by June of 2010. In June of 2010, Amtrak decided they wanted to expand the size of the building to be able to move a crew base into Lincoln, adding an additional 300 square feet. By November it appeared everything was finalized and the project that included the building and the canopy that goes on top of the platform was put out for bid. Several alternates included with many of the variations being on the canopy. There were eight companies that submitted bids and of those, two were very close. When the various alternates were chosen Ronco came in as the low bidder. Their bid is lower than the estimate so there will be a small amount of savings on this project.

Clare noted that this company is out of Omaha and asked if they are organized labor as he noticed a union logo on their website. Marvin did not know if they were union or not but did know that they have experience in constructing an Amtrak building in Omaha.

Beutler asked for public comment. Dr. Traudt came forward and expressed her concern about the cost of the platform. She was very surprised that a concrete platform would cost half a million dollars. Beutler agreed that it is a lot of money and he was surprised at the cost as well.

Randy Swanson, PC Sports, advised that there were nine bidders on the building with a great range of qualified contractors from Lincoln and Omaha. The bids were very close so they spent extra time scrutinizing the bids to make sure they got qualified candidates and a correct number. Swanson also did research on the cost of the platform and it is comparable to other platforms going up across the country. That reassured him that they were headed down the right path.

Clare asked if the cost of the platform, station and canopy are all within the budget and what was estimated. Swanson answered that they are all on budget and maybe a little better than expected. With site work in the winter there is a little challenge ahead depending on how cold it gets and how much concrete can be poured. Carroll asked what the completion date is and if there is an incentive for early completion. Swanson stated that the completion date is June 15, 2012 and there is not an incentive.

Peo informed the Board that Motion to Amend No. 1 puts the agreement with Ronco before the board as the original resolution was created when there were still bid proposals coming in.

Hearing no other comments, Carroll made a motion to approve WH 11-94. Clare seconded the motion. Carroll then made a motion to approve Amendment No. 1. Clare seconded the motion. Motion carried 3-0. WH 11-94 as amended was then voted on and carried 3-0.

Item 6 -- Set Next Meeting Date

The next regular meeting date is scheduled for Friday, January 6, 2012 at 3:30 in City Council Chambers Room 112.

Item 7 – Motion to Adjourn

Carroll made a motion to adjourn the meeting. Clare seconded the motion. Motion carried 3-0. Meeting adjourned at 2:55 P.M.

Prepared by: Melissa Ramos-Lammli, Public Works and Utilities

West Haymarket JPA Meeting

Date 12/20/2011

Page 1

Name (Please Print)	Address	Phone/E-Mail
Jane Kinsey		
Dr. Barbara Troxel		
Jo Feller		

Vendor Number	Name	Remark	Project	Description	Do Ty	Doc Number	Amount	Payment Date	Payment Number
82368	State of Nebraska	Sep'11 Monitoring #10620	870602	WH Voluntary Clean-up Program	PV	1319292	1,157.18	11/02/11	458077
85711	Greenscapes Landscape Services Inc	Mulching on INS lot	870304	WH 10th & Salt Creek Road Impr	PV	1318928	2,120.00	11/02/11	458078
98642	Information Services	09/11 Data Processing	06095	W Haymarket O & M	PV	1319357	88.42	11/02/11	458079
123481	Asplundh Tree Expert Co.	Cust#041740,Cont#10001407	870302	WH "M"&"N" St,7th to 10th St	PV	1319293	3,811.39	11/02/11	458080
594773	Alfred Benesch & Company	Services 8/22-9/18/11	870604	WH Other/Miscellaneous	OV	1319421	12,511.46	11/02/11	458081
594773	Alfred Benesch & Company	Services 8/22-9/18/11	870602	WH Voluntary Clean-up Program	OV	1319421	27,922.15	11/02/11	458081
594773	Alfred Benesch & Company	Services 8/22-9/18/11	870603	WH Environmental Contngy Pln	OV	1319421	15,137.48	11/02/11	458081
594773	Alfred Benesch & Company	Services 8/22-9/18/11	870601	WH NDEQ T-200	OV	1319422	10,615.60	11/02/11	458081
38181	Judds Bros Construction Co	#870303,work 9/11-10/15/11	870303	WH USPS Parking Lot Reconstctn	OV	1319447	23,967.77	11/03/11	48585
185050	TCW Construction Inc	#870304, work 9/1-10/15/11	870304	WH 10th & Salt Creek Road Impr	OV	1319169	78,585.63	11/03/11	48640
249308	DLR Group Inc	Sept'2011 Arena + work	870100	WH Arena	OV	1319439	360,000.00	11/03/11	48649
249308	DLR Group Inc	Sep'2011 Ded Wrk Area LNC	870100	WH Arena	OV	1319441	1,504.59	11/03/11	48649
249308	DLR Group Inc	Sep'2011 Fixed Reimb Exps	870100	WH Arena	OV	1319442	10,000.00	11/03/11	48649
249308	DLR Group Inc	Sep'2011 Furniture Interior	870100	WH Arena	OV	1319443	16,331.30	11/03/11	48649
249308	DLR Group Inc	Sep'2011 Parking Garage	870203	WH Arena Parking Garage	OV	1319444	264,699.54	11/03/11	48649
249308	DLR Group Inc	Sep'2011 Smoke Modeling-CCI	870100	WH Arena	OV	1319445	16,625.00	11/03/11	48649
595872	CSL Marketing Group	Sales Center Build-out	870100	WH Arena	OV	1316205	7,734.67	11/03/11	48694
595872	CSL Marketing Group	Void payment of Inv.#370	870100	WH Arena	OV	1318825	7,734.67-	11/03/11	48694
595872	CSL Marketing Group	Arena suite furniture	870100	WH Arena	OV	1319166	7,228.66	11/03/11	48694
596608	M A Mortenson Company	Sept'2011 services	870000	WH General Coordination	OV	1318826	16,666.00	11/03/11	48695
172419	Lincoln Water System	Relocate hydrant,6th & N	870703	WH Initial Haymarket Site Prep	PV	1321055	1,528.45	11/09/11	458610
278150	Lincoln Wastewater System	Abandon sewer line	870703	WH Initial Haymarket Site Prep	PV	1321056	3,100.02	11/09/11	458611
594773	Alfred Benesch & Company	Services 9/12-10/9/11	870100	WH Arena	OV	1321050	7,739.49	11/09/11	458612
38181	Judds Bros Construction Co	#870703, work 9/25-10/15/11	870703	WH Initial Haymarket Site Prep	OV	1320608	416,576.19	11/10/11	48732
249308	DLR Group Inc	Signage work,Sept,2011	870100	WH Arena	OV	1321048	71,441.23	11/10/11	48824
596579	SMG	Sept'2011 consulting fee	870100	WH Arena	OV	1321047	5,000.00	11/10/11	48887
596579	SMG	Reimb exps, Lorenz,Godoy	870100	WH Arena	PV	1321053	124.45	11/10/11	48887
139758	Union Pacific Railroad	Cust#62517, Cont#WO04367	870907	WH UP Track Mod West of Bridge	PV	1322196	174,478.91	11/16/11	459095
594773	Alfred Benesch & Company	Services 9/12-10/9/11	870100	WH Arena	OV	1322202	1,613.85	11/16/11	459096
185050	TCW Construction Inc	#870302,work 10/11-10/27/11	870302	WH "M"&"N" St,7th to 10th St	OV	1322204	93,552.65	11/17/11	49003
595872	CSL Marketing Group	Nov'11 ret+rent+const costs	870100	WH Arena	OV	1322199	18,078.10	11/17/11	49068
595872	CSL Marketing Group	Grndbrk event costs	870100	WH Arena	OV	1322201	1,872.64	11/17/11	49068
77921	County/City Property Management	CITY CONTROLLER-JPA	06095	W Haymarket O & M	PV	1323419	.41	11/23/11	459671
77921	County/City Property Management	CITY CONTROLLER-JPA	06095	W Haymarket O & M	PV	1323422	709.62	11/23/11	459671
97885	Copy Services	Customer 595381	06095	W Haymarket O & M	PV	1323428	2.43	11/23/11	459672
97885	Copy Services	Customer 595381	06095	W Haymarket O & M	PV	1323498	.33	11/23/11	459672
102154	Public Building Commission	Finance-Mark L.	06095	W Haymarket O & M	PV	1323434	204.62	11/23/11	459673
102154	Public Building Commission	Finance-Mark L.	06095	W Haymarket O & M	PV	1323434	22.24	11/23/11	459673
108417	Citizen Information Center	WHJPA Video 10-6-11, 10-26-11	06095	W Haymarket O & M	PV	1323429	270.00	11/23/11	459674
324566	Union Bank & Trust Company	West Haymrkt Bds, Series 2010A	195011	JPA 2010A Debt Service	PV	1323520	2,325,755.00	11/23/11	459675
324566	Union Bank & Trust Company	West Haymrkt Bds, Series 2010B	195021	JPA 2010B/C Debt Service	PV	1323522	1,855,980.00	11/23/11	459675
324566	Union Bank & Trust Company	West Haymrkt Bds, Series 2010C	195021	JPA 2010B/C Debt Service	PV	1323523	1,081,181.25	11/23/11	459675
324566	Union Bank & Trust Company	West Haymrkt Bds, Series 2011	195031	JPA 2011 Debt Service	PV	1323524	1,415,770.31	11/23/11	459675
456171	Qwest Communications Company LLC	Relocate billing #3	870502	WH Fiber Optic Comm & Other	OV	1324782	47,773.29	11/23/11	459676
598263	PC Sports LLC	Oct'2011 Mgmt services	870000	WH General Coordination	OV	1323399	76,030.00	11/23/11	459677
598263	PC Sports LLC	Oct'2011 Mgmt services	870100	WH Arena	OV	1323399	30,450.00	11/23/11	459677
588846	District Energy Corp	September 2011 design work	06095	W Haymarket O & M	PV	1323431	113,531.09	11/24/11	49203
591846	Marvin Investment Management Co	Program Admin 9/16/11-10/15/11	06095	W Haymarket O & M	PV	1323425	7,063.00	11/24/11	49207
593485	Thought District Inc	10-JPA-0007 Ongoing Management	06095	W Haymarket O & M	PV	1323435	2,000.00	11/24/11	49211
596608	M A Mortenson Company	Aug'11 Arena work	870100	WH Arena	OV	1324521	176,349.68	11/24/11	49218
Grand total							8,797,171.42		

12/2/2011

Public Works WHJPA Engineering Costs
11/1/2011 through 11/30/2011

Description	Explanation	Type	Doc Num	Fund	Business Unit	Object	Sub	Amount	G/L Date
Construction Engineering	WH "M"&"N" St,7th to 10th St	EU	328219	00951	870302	6153	320	2,051.49	11/3/2011
Design Engineering	WH "M"&"N" St,7th to 10th St	EU	328219	00951	870302	6153	130	2,637.59	11/3/2011
Design Engineering	WH Amtrak Station	EU	328219	00951	870906	6153	130	230.71	11/3/2011
Design Engineering	WH Core Area Roadway & Utility	EU	328219	00951	870305	6153	130	1,200.06	11/3/2011
Design Engineering	WH General Coordination	EU	328219	00951	870000	6153	130	1,082.79	11/3/2011
Design Engineering	WH Initial Haymarket Site Prep	EU	328219	00951	870703	6153	130	807.50	11/3/2011
Design Engineering	WH USPS Parking Lot Reconstctn	EU	328219	00951	870303	6153	130	1,095.90	11/3/2011
Observer/Inspections	WH "M"&"N" St,7th to 10th St	EU	328219	00951	870302	6153	325	4,369.40	11/3/2011
Construction Engineering	WH "M"&"N" St,7th to 10th St	EU	328948	00951	870302	6153	320	2,012.35	11/17/2011
Design Engineering	WH "M"&"N" St,7th to 10th St	EU	328948	00951	870302	6153	130	2,101.51	11/17/2011
Design Engineering	WH Amtrak Station	EU	328948	00951	870906	6153	130	230.71	11/17/2011
Design Engineering	WH Core Area Roadway & Utility	EU	328948	00951	870305	6153	130	854.00	11/17/2011
Design Engineering	WH General Coordination	EU	328948	00951	870000	6153	130	1,471.39	11/17/2011
Design Engineering	WH Initial Haymarket Site Prep	EU	328948	00951	870703	6153	130	519.11	11/17/2011
Design Engineering	WH USPS Parking Lot Reconstctn	EU	328948	00951	870303	6153	130	749.84	11/17/2011
Observer/Inspections	WH "M"&"N" St,7th to 10th St	EU	328948	00951	870302	6153	325	2,448.79	11/17/2011
								23,863.14	

City of Lincoln, NE
West Haymarket
Job Cost Report
As of November 30, 2011

	Total Budget	Expend.	Encumb.	Available Balance	Accounts Receivable	Adjusted Avail Bal
00951 West Haymarket Capital Proj						
70090 West Haymarket Park						
870000 WH General Coordination		3,649,313	3,290,059	6,939,372-		6,939,372-
70090 West Haymarket Park		3,649,313	3,290,059	6,939,372-		6,939,372-
70091 Arena						
870100 WH Arena	161,899,950	7,389,413	70,278,953	84,231,584		84,231,584
870101 WH Arena Contingency	6,995,650			6,995,650		6,995,650
870203 WH Arena Parking Garage	10,352,100	440,347	285,447	9,626,306		9,626,306
70091 Arena	179,247,700	7,829,760	70,564,400	100,853,540		100,853,540
70092 Parking						
870201 WH HymktPkLot,FestSp&PedGrdStr	14,089,426	195,936	1,386,414	12,507,076		12,507,076
870202 WH Parking Garage #1	13,090,000	169,846	841,529	12,078,625		12,078,625
870204 WH Parking Garage #2		161,778	67,080	228,858-		228,858-
70092 Parking	27,179,426	527,560	2,295,023	24,356,843		24,356,843
70093 Roads						
870301 WH Charleston Bridge/Roadway	4,835,720	250,941	391,841	4,192,938		4,192,938
870302 WH "M"&"N" St,7th to 10th St	2,280,000	1,308,579	358,182	613,239		613,239
870303 WH USPS Parking Lot Reconstctn	885,000	464,431	185,796	234,773		234,773
870304 WH 10th & Salt Creek Road Impr	3,412,000	3,347,644	23,644	40,712		40,712
870305 WH Core Area Roadway & Utility	14,668,960	212,607	716,068	13,740,285		13,740,285
870306 WH Traffic Analysis		57,270	28,148	85,418-		85,418-
870307 WH Streetscape		100,728	304,978	405,706-		405,706-
870308 WH Sun Valley Blvd & West "O"	737,400	19,308	20,063	698,029		698,029
70093 Roads	26,819,080	5,761,508	2,028,720	19,028,852		19,028,852
70094 Pedestrian Ways						
870401 WH Plaza	1,200,000			1,200,000		1,200,000

City of Lincoln, NE
West Haymarket
Job Cost Report
As of November 30, 2011

	Total Budget	Expend.	Encumb.	Available Balance	Accounts Receivable	Adjusted Avail Bal
00951 West Haymarket Capital Proj						
70094 Pedestrian Ways						
870402 WH Canopy Phase II						
70094 Pedestrian Ways	1,200,000			1,200,000		1,200,000
70095 Utilities						
870501 WH Sanitary Sewer Relocation	1,440,000	1,492,905		52,905-		52,905-
870502 WH Fiber Optic Comm & Other	650,880	506,035	31,547	113,298		113,298
70095 Utilities	2,090,880	1,998,940	31,547	60,393		60,393
70096 Environmental						
870601 WH NDEQ T-200	1,706,504	1,525,872	16,037	164,595	80,945	245,540
870602 WH Voluntary Clean-up Program	2,100,000	574,388	78,659	1,446,953		1,446,953
870603 WH Environmental Contngy Pln	2,400,000	180,780	57,550	2,161,670		2,161,670
870604 WH Other/Miscellaneous	525,600	261,014	64,158	200,428		200,428
870605 WH Canopy Phase I-Lead Abatemt						
70096 Environmental	6,732,104	2,542,054	216,404	3,973,646	80,945	4,054,591
70097 Dirt Moving						
870701 WH Stmwtr Mtgtn-Sth&WstOf BNSF	2,400,000			2,400,000		2,400,000
870703 WH Initial Haymarket Site Prep	2,088,360	5,116,721	1,434,012	4,462,373-		4,462,373-
870704 WH Other Stormwater Mitigation	3,105,840			3,105,840		3,105,840
70097 Dirt Moving	7,594,200	5,116,721	1,434,012	1,043,467		1,043,467
70098 TIF Improvements						
870800 WH TIF Improvements	5,515,693			5,515,693		5,515,693
70098 TIF Improvements	5,515,693			5,515,693		5,515,693
70099 Site Purchase						

		Total Budget	Expend.	Encumb.	Available Balance	Accounts Receivable	Adjusted Avail Bal
	870901 WH BNSF Land Acquisition	1,000,000	1,051,078		51,078-		51,078-
	870902 WH Alter Site Purchase	4,080,000	3,091,934		988,066		988,066
	870903 WH Jaylynn Site Purchase	3,080,000	1,490,519		1,589,481		1,589,481
	870904 WH UP Site Purchase	1,000,000	1,326,248		326,248-		326,248-
	870905 WH BNSF Const, Rehab, Reloc	44,000,000	49,699,395		5,699,395-		5,699,395-
	870906 WH Amtrak Station	1,440,000	200,628	80,305	1,159,067		1,159,067
	870907 WH UP Track Mod West of Bridge	1,236,000	1,164,865		71,135		71,135
	870908 WH Other Private Prop Acqstns	625,000	602,796		22,204		22,204
70099	Site Purchase	56,461,000	58,627,463	80,305	2,246,768-		2,246,768-
70100	Other Costs						
	870951 WH ITS & Dynamic Message Signs	2,700,000	51,615	123,727	2,524,658		2,524,658
	870952 WH Community Space & Civic Art	1,500,000			1,500,000		1,500,000
70100	Other Costs	4,200,000	51,615	123,727	4,024,658		4,024,658
70105	Bond Related Costs						
	870975 WH Miscellaneous	5,160,000			5,160,000		5,160,000
	870976 WH Line of Credit		53,227		53,227-		53,227-
	870977 WH Series 1 JPA Debt		1,535,168		1,535,168-		1,535,168-
	870978 WH Series 2 JPA Debt		1,221,802		1,221,802-		1,221,802-
	870979 WH Series 3 JPA Debt		577,661		577,661-		577,661-
	870980 WH Series 4 JPA Debt		1,243,825		1,243,825-		1,243,825-
70105	Bond Related Costs	5,160,000	4,631,683		528,317		528,317
00951 West Haymarket Capital Proj		322,200,083	90,736,617	80,064,197	151,399,269	80,945	151,480,214

City of Lincoln, NE
West Haymarket JPA
Operating Expenditure Report
As of November 30, 2011

00950 West Haymarket Reven
06095 W Haymarket O & M

	ORIGINAL BUDGET	REAPPROP & P/Y ENC	BUDGET REVISIONS	TOTAL	YTD EXPEND	AVAILABLE BALANCE
00950 West Haymarket Revenue						
06095 W Haymarket O & M						
11 Materials & Supplies						
5221 Office Supplies	250			250		250
5261 Postage	1,000			1,000	742	258
11 Materials & Supplies	1,250			1,250	742	508
12 Other Services & Charges						
5621 Misc Contractual Services	428,698			428,698	6,524	422,174
5624 Auditing Service	15,000			15,000	10,500	4,500
5631 Data Processing Service	10,855			10,855	177	10,678
5633 Software	1,000			1,000		1,000
5637 Engineering & Design	1,828,566			1,828,566	298,942	1,529,624
5643 Management Services	95,043			95,043	24,175	70,868
5762 Photocopying	500			500	3	497
5763 Printing	500			500	56	444
5794 Public Officials	30,000			30,000		30,000
5928 Rent of Co/City Bldg Space	2,456			2,456	614	1,842
5931 Parking Rent Bldg Comm	267			267	67	200
5952 Advertising/Media Serv	2,850			2,850	495	2,355
12 Other Services & Charges	2,415,735			2,415,735	341,553	2,074,182
06095 W Haymarket O & M	2,416,985			2,416,985	342,295	2,074,690

00950 West Haymarket Reven
195011 JPA 2010A Debt Servi

	ORIGINAL BUDGET	REAPPROP & P/Y ENC	BUDGET REVISIONS	TOTAL	YTD EXPEND	AVAILABLE BALANCE
195011 JPA 2010A Debt Servic						
15 Debt Service						
6235 Bd Trustee Pmt-Interest	4,651,510			4,651,510	2,325,755	2,325,755
15 Debt Service	4,651,510			4,651,510	2,325,755	2,325,755
195011 JPA 2010A Debt Servic	4,651,510			4,651,510	2,325,755	2,325,755

00950 West Haymarket Reven
195021 JPA 2010B/C Debt Ser

	ORIGINAL BUDGET	REAPPROP & P/Y ENC	BUDGET REVISIONS	TOTAL	YTD EXPEND	AVAILABLE BALANCE
195021 JPA 2010B/C Debt Serv						
15 Debt Service						
6235 Bd Trustee Pmt-Interest	5,874,323			5,874,323	2,937,161	2,937,162
15 Debt Service	5,874,323			5,874,323	2,937,161	2,937,162
195021 JPA 2010B/C Debt Serv	5,874,323			5,874,323	2,937,161	2,937,162

00950 West Haymarket Reven
195031 JPA 2011 Debt Servic

	ORIGINAL BUDGET	REAPPROP & P/Y ENC	BUDGET REVISIONS	TOTAL	YTD EXPEND	AVAILABLE BALANCE
195031 JPA 2011 Debt Service						
15 Debt Service						
6235 Bd Trustee Pmt-Interest	3,711,614			3,711,614	1,415,770	2,295,844
15 Debt Service	3,711,614			3,711,614	1,415,770	2,295,844
195031 JPA 2011 Debt Service	3,711,614			3,711,614	1,415,770	2,295,844
00950 West Haymarket Revenue	16,654,432			16,654,432	7,020,981	9,633,451

WH 12-1 Introduce: 1-6-12

RESOLUTION NO. WH- _____

BE IT RESOLVED by the Board of Representatives of the West Haymarket Joint Public Agency:

That the City Clerk is hereby directed to make nunc pro tunc corrections to clerical errors in Resolution No. WH00202 by changing the typographical error in line 3 referring to Task 8 to Task 18 and by changing the contract amount in line 6 from the stated amount of $87,150.00 to the correct amount of $65,000.00.

Adopted this _____ day of January, 2012.

Introduced by:

_____

Approved as to Form & Legality:

_____
Legal Counsel for
West Haymarket Joint Public Agency

West Haymarket Joint Public Agency
Board of Representatives

_____
Tim Clare

_____
Chris Beutler

_____
Eugene Carroll

WH00202

WH 11-75 Introduce: 9-16-11

RESOLUTION NO. WH00202

BE IT RESOLVED by the Board of Representatives of the West Haymarket Joint Public Agency:

That the attached Amendment No. 3 to the Agreement for Environmental Remediation Consulting Services between Alfred Benesch & Company and the West Haymarket Joint Public Agency to include additional services set out in Task 7 and Task 8 for an additional total amount of $87,150.00 is hereby approved and the Chairperson of the West Haymarket Joint Public Agency Board of Representatives is hereby authorized to execute said Amendment No. 3 on behalf of the JPA.

The City Clerk is directed to return a fully executed original of Amendment No. 3 to Alfred Benesch & Company, Attn: Gary Proskovec, 825 J Street, Lincoln, NE 68508.

Adopted this 16th day of September, 2011.

Introduced by:

Tim Clare

Approved as to Form & Legality:

Legal Counsel for
West Haymarket Joint Public Agency

West Haymarket Joint Public Agency
Board of Representatives

Tim Clare

Chris Beutler

9/16/11 WHJPA Proceedings:

CLARE Moved to amend Bill 11-75 to Substitute the attached Amendment #3 to the Agreement for Environmental Remediation Consulting Services between Alfred Benesh & Co. & the WHJPA.

Seconded by Beutler & carried by the following vote: AYES: Beutler, Clare; NAYS: None.

WH 11-75

MOTION TO AMEND NO. 1

I hereby move to amend Bill No. WH 11-75 in the following manner:

1. Substitute the attached Amendment No. 3 to the Agreement for Environmental Remediation Consulting Services between Alfred Benesch & Company and the West Haymarket Joint Public Agency.

Introduced by:

Tim Clare

AYES: Beutler, Clare; NAYS: None.

Approved as to Form & Legality:

Rod Cooper

Legal Counsel for
West Haymarket Joint Public Agency

Requested by: Miki Esposito

Reasons for Request: To change the total estimated fee for completion of the work associated with Amendment No. 3 from $87,150.00 to $0.

AMENDMENT NO. 3

to the AGREEMENT for

ENVIRONMENTAL REMEDIATION CONSULTING SERVICES

between ALFRED BENESCH & COMPANY

and the

WEST HAYMARKET JOINT PUBLIC AGENCY

WEST HAYMARKET ENVIRONMENTAL REMEDIATION PROJECT

Specification No. 10-083

This Contract Amendment is made by and between Alfred Benesch & Company (Consultant), and the West Haymarket Joint Public Agency, hereinafter called JPA, this 16th day of September 2011 and approved by Resolution No. WH002202

WHEREAS, it is the mutual desire of the parties hereto to amend the Agreement to provide professional services associated with the West Haymarket Environmental Remediation Contract which was entered into with the City of Lincoln on July 15, 2010 by Executive Order No. 083296 *to provide environmental remediation consulting services.* Such agreement was approved by the JPA under Resolution *WH-JPA Resolution for Assignment and Assumption Agreements* on July 22, 2010.

The general description of work to be added to the existing Agreement and covered by this Amendment shall include an expanded scope of environmental remediation consulting services for existing tasks. A detailed breakdown of scope and fee for this amendment is included in the attached "**Amendment No. 3 to Scope of Services.**"

This Amendment does not require or authorize additional funding. Required supplemental funding for Tasks 7 and 18 (total $65,000.00) as further described in this Amendment will be re-allocated from Task 14 to Tasks 7 and 18 as appropriate. The total not-to-exceed contract amount remains at $1,016,543.00.

NOW THEREFORE, it is hereby agreed that the existing Agreement be amended to include the services as described in the attached "**Amendment No. 3 to Scope of Services.**"

This AMENDMENT shall be deemed a part of, and shall be subject to all terms and conditions of the existing Agreement. Except as modified above, the existing Agreement shall remain in full force and effect.

West Haymarket Joint Public Agency

_____

Title: Chair

Environmental Consultant – Alfred Benesch & Company

By: _____

Title: V.P.

Amendment No. 3 to Scope of Services

Qualified Environmental Consultants

Haymarket Environmental Remediation Services - Specification no. 10-083

On July 15, 2010, Alfred Benesch & Company (Consultant) entered into an agreement with the City of Lincoln under EO 083296 to provide environmental remediation consulting services. The agreement allows for adjustments in the scope of services and corresponding adjustments in compensation for such changes in the scope of services.

This Amendment No. 3 provides for expanded scope of services and fee for Task 7 – VCP Site Investigation and Task 18 – BNSF/Alter Investigation as described below.

Task 7 – Voluntary Cleanup Program (VCP) Investigation

Original Estimated Fee: Time and Material – Cost not to Exceed $153,340.00

This task initially included preparation of a work plan and investigation of the West Haymarket Remediation Site North (WHRSN) parcels. Due to construction schedule demands for the Arena and mixed use development areas, multiple iterations of the WHRSN work plan were necessary to address data gaps and to prioritize clearance of areas prior to earthwork/grading related to site development. Benesch prepared an interim investigation report and remedial action plan in April of 2011 in order to gain NDEQ concurrence on soil management plans related to the Arena site development scheduled to start in May of 2011. The report was approved by NDEQ and Arena site work proceeded on time.

Three field deployments were necessary to accommodate development schedules. Coupled with preparation of the interim investigation and remedial action report in April of 2011, the original estimated fee for this task is insufficient to complete all investigation and reporting requirements under the VCP for the WHRSN. Supplemental funding is required for the following:

- Field labor and Geoprobe subcontracting fees for multiple investigation deployments;
- Laboratory analytical fees;
- Additional monitoring well installation requested by NDEQ;
- Additional off-site sampling of soils/groundwater to determine background concentrations of arsenic;
- Additional round of groundwater sampling for all permanent monitoring wells; and
- Preparation of the final WHRSN Investigation Report

Supplemental funding required for completion of the above tasks:

Total Estimate:	$88,219.00
Less Available Task 7 Balance (as of 7/24/11):	$33,219.00
Total Net Supplemental Funding Request:	***$55,000.00***

ITEM/DESCRIPTION	RATE	Task 7 VCP Investigation	
LABOR		HRS	$$
Project Manager Uhlarik	$150.00	24	$3,600
Senior Scientist Imig	$120.00	80	$9,600
Project Engineer/Lim	$120.00	40	$4,800
Geochemist/Data Specialist/Lippoldt	$122.00	60	$7,320
Staff Scientist I/Geologist I	$63.00	112	$7,056
Staff Scientist II/Geologist II	$89.00	80	$7,120
Sr. Technician	$81.00	40	$3,240
Technician	$61.00	40	$2,440
Drafting/GIS/Sr. Technologist	$98.00	40	$3,920
TOTAL LABOR (HRS/$)		516	$49,096
EXPENSES			
ITEM/DESCRIPTION	RATE	UNITS	$$
Lab Expenses	LS	1	$25,000
Sub - Meter GPS Equipment	$50.00	3	$150
Water Level Indicator	$50.00	10	$500
Organic Vapor Meter	$95.00	8	$760
Drilling Services (Geoprobe)	$2,000.00	5	$10,000
Drilling Services (Monitoring Wells Installation)	$2,513.00	1	$2,513
On-site Lab Supplies	$20.00	10	$200
Total Expenses:			$39,123
Task 7 Supplemental Fee:			$88,219
Less Remaining Balance (through 7/24)			$33,219
Net Supplemental Request Task 7:			**$55,000**

In order to utilize existing available funds, **$55,000.00** will be re-allocated from the Task 14 (VCP Remedial Action Oversight) fee to Task 7 bringing the total authorized fee for Task 7 to **$208,340.00.**

Task 18 – BNSF/Alter Investigation

Original Estimated Fee – Time and Material – Cost not to Exceed $41,750.00

The original scope and fee for this task included a limited amount of laboratory fees for completion of PCB analysis at the site. EPA Region 7 has specified substantially more testing than originally budgeted so a contingency of **$10,000.00** to cover supplemental drilling and laboratory analysis is required for completion of this task. In order to utilize existing available funds, $10,000.00 will be re-allocated from Task 14 (VCP Remedial Action Oversight) to Task 18 bringing the total authorized fee for Task 18 to **$51,750.00.**

The resulting net authorized fee for Task 14 after re-allocation to Tasks 7 and 18 is **$4,100.00.** The scope of work for Task 14 is also adjusted accordingly to provide a commensurate level of effort for oversight of remedial construction in the WHRSN.

There is no increase in the total authorized fee for the project at this time.

WH 12-2 Introduce: 1-6-12

RESOLUTION NO. WH- _____

BE IT RESOLVED by the Board of Representatives of the West Haymarket Joint Public Agency:

That the attached Title Sponsorship Agreement between Pinnacle Bank and the West Haymarket Joint Public Agency is hereby approved and the Chairperson of the West Haymarket Joint Public Agency Board of Representatives is hereby authorized to execute said Title Sponsorship Agreement on behalf of the JPA.

The City Clerk is directed to return a fully executed original of the Agreement to Mark Hesser, President, Pinnacle Bank, 18081 Burt Street, Omaha, NE 68022.

Adopted this _____ day of January, 2012.

Introduced by:

_____

Approved as to Form & Legality:

_____
Legal Counsel for
West Haymarket Joint Public Agency

West Haymarket Joint Public Agency
Board of Representatives

_____
Tim Clare

_____
Chris Beutler

_____
Eugene Carroll

Title Sponsorship Agreement

Pinnacle Bank
And
West Haymarket
Joint Public Agency

Pinnacle Bank Arena

TITLE SPONSORSHIP AGREEMENT

This Title Sponsorship Agreement (the "Agreement") is made and entered into to be effective on the date of execution by the West Haymarket Joint Public Agency (the "Effective Date") by and between the following parties (the "Parties"):

(i) The West Haymarket Joint Public Agency (the "JPA"); and

(ii) Pinnacle Bank.

WHEREAS, the JPA has undertaken the development and construction of an Arena with a 14,970 seat capacity in its basketball seating configuration (the "Arena"); and

WHEREAS, the JPA contemplates the Arena to be the principal venue in Lincoln, Nebraska for athletic events, musical performances, and other entertainment activities; and

WHEREAS, the University of Nebraska-Lincoln (hereinafter "UNL") Men's and Women's Basketball Teams will be the primary tenants of the Arena with UNL holding certain rights and privileges in regard to the Arena; and

WHEREAS, Pinnacle Bank desires to become the Title Sponsor of the Arena.

NOW, THEREFORE, in consideration of the promises and the mutual covenants contained herein, and intending to be legally bound hereby, the JPA and Pinnacle Bank agree as follows:

(1) **Term of Agreement**. This Agreement shall commence as of the Effective Date and shall continue in full force and effect through and including August 31, 2038 unless this Agreement is terminated earlier pursuant to the provisions hereof.

(2) **Exclusive Title Sponsorship**. From and after the Effective Date, Pinnacle Bank shall be the exclusive Title Sponsor of the Arena subject to the terms and conditions set forth herein.

(3) **Title Sponsorship Fee**.

(a) Base Fee. The Base Fee for the sponsorship rights and privileges granted to Pinnacle Bank pursuant to this Agreement shall, subject to the adjustments set forth in (e), (f), (g) and (h) below, be Eleven Million, Two Hundred and Fifty Thousand Dollars ($11,250,000) (the "Base Fee"). The Base Fee shall be paid by Pinnacle Bank, or its holding company, Pinnacle Bancorp, Inc., a Nebraska corporation (the "Holding Company") in twenty-five installments as set forth herein.

(b) First Installment Payment. The first Base Fee installment payment in the amount of Two Hundred, Eighty Thousand Dollars ($280,000) shall be paid on or before thirty (30) calendar days after the Effective Date.

(c) Subsequent Installment Payments. The second Base Fee installment payment in the amount of Two Hundred, Eighty Thousand Dollars ($280,000) shall be paid to the JPA on or before July 31, 2012 and each of the twenty-three remaining annual Base Fee installment payments in the amounts set forth below shall be paid to the JPA on or before the first day of September starting in 2015:

Payment Number	**Due Date**	**Amount**
3	September 1, 2015	$280,000
4	September 1, 2016	$280,000
5	September 1, 2017	$280,000
6	September 1, 2018	$280,000
7	September 1, 2019	$280,000
8	September 1, 2020	$280,000
9	September 1, 2021	$280,000
10	September 1, 2022	$280,000
11	September 1, 2023	$563,333
12	September 1, 2024	$563,333
13	September 1, 2025	$563,333
14	September 1, 2026	$563,333
15	September 1, 2027	$563,333
16	September 1, 2028	$563,333
17	September 1, 2029	$563,333
8	September 1, 2030	$563,333
9	September 1, 2031	$563,333
20	September 1, 2032	$563,333
21	September 1, 2033	$563,333
22	September 1, 2034	$563,333
23	September 1, 2035	$563,333
24	September 1, 2036	$563,333
25	September 1, 2037	$563,338

(d) Semi-Annual Payments. Pinnacle Bank or its Holding Company may, at its sole discretion, pay the Base Fee installment payments semi-annually with the first payment being due on September 1 of the term year and the second installment being due on March 1 of the term year. All payments made by the Holding Company shall be treated the same as if made by Pinnacle Bank.

(e) Accelerated Payments. Pinnacle Bank or the Holding Company may, at any time or times, in its sole discretion, prepay all or any portions of any one or more of the base fee installment payments set forth in (a) through (c) above by paying to the JPA, in lieu of the amount of the installment set forth above, a discounted amount (the "Discount Amount"). The Discount Amount shall be the present value of the base installment payment set forth above discounted from the date of the scheduled installment payment set forth above to the date of the actual prepayment made by Pinnacle Bank or the Holding Company using a discount rate of 4.00%.

(f) NSAA Bonus Payments. Pinnacle Bank or the Holding Company shall make an additional annual payment to the JPA of $20,000 for each year during the term of this Agreement in which the Arena serves as a site for any one or more of the following NSAA state tournament competitions: volleyball, boys basketball, girls basketball, or wrestling. This additional $20,000 payment shall be paid on September 1st of the year prior to the relevant state tournament regardless if the Arena serves as a site for one or more of the aforementioned NSAA state tournaments during such year.

(g) Performance Discounts. Beginning in the September 2024 - August 2025 term year and for each term year thereafter, Pinnacle Bank shall receive a 20% discount off the base fee for each term year that the Arena does not meet or exceed 500,000 in Arena Event attendance or does not hold at least seventy-five (75) Arena Events during the prior term year. Beginning in the September 2024 – August 2025 term year and for each term year thereafter, Pinnacle Bank shall receive a 30% discount off the base fee for each term year that the Arena does not meet or exceed 400,000 in Arena Event attendance or does not hold at least sixty (60) Arena Events during the prior term year. Accelerated payments shall not be discounted for failure to reach attendance or event targets during the installment term year.

(h) Minimum Arena Media Advertising Discount. Beginning in the September 2013 - August 2014 term year, the JPA shall confirm and report to Pinnacle Bank that the Arena Operator, Event Promoters, Event Presenters, Event Sponsors, Tenants, and Licensees spent or bartered for a minimum of $750,000 in media advertising promoting the Arena and/or Arena Events ("Media Advertising Spending") during each term year. If the minimum of $750,000 in Media Advertising Spending is not reached during any year, Pinnacle Bank shall receive a discount off of its next annual Base Fee installment payment equal to ten percent (10%) of the difference between $750,000 and the actual amount spent or bartered for on Media Advertising by the Arena Operator, Arena Event Promoters, Event Presenters, Event Sponsors, Tenants, and Licensees promoting the Arena and/or Arena Events during such term year. The minimum media advertising discount may be deducted from the portion of the annual Base

Fee which Pinnacle Bank has not prepaid or from any NSAA Bonus Payment which becomes due during the term year following the term year during which the minimum media advertising spending under 3(h) above was not met. If Pinnacle Bank has prepaid the entire Base Fee for the year in question, no further deduction shall be available to Pinnacle Bank for such Base Fee.

(i) Annual Reporting. On or by January 1st of each term year, beginning with the January 1 following the term year ending on August 31, 2014 the JPA shall report in writing to Pinnacle Bank the total Arena attendance, the number of Arena Events, and the total amount spent or bartered for on Arena media advertising by the Arena Operator, Event Promoters, Event Presenters, Event Sponsors, Tenants, and Licensees for the previous term year.

(j) Delinquent Payments. In the event any installment is not paid on or before the date it is due and payable, such amount shall be delinquent. Delinquent amounts shall bear interest from the date of delinquency to the date the full payment is received by the JPA at an annual rate equal to the prime rate (published as the United States national average prime rate in The Wall Street Journal on the payment due date) plus three (3) percentage points, but in no event greater than the maximum amount permitted by applicable law.

(k) Remittances of Installment Payments to be Made to the JPA. Pinnacle Bank shall remit all Installment Payments as calculated under (a) through (j) above directly to the JPA. Such remittances shall be made payable to the JPA, in care of the address specified in this Agreement.

(l) Payments Net. All payments of the Total Fee shall be net of all fees and applicable taxes directly tied to such payments, and shall be payable in full to the JPA, with the exception that any taxes, fees, or surcharges imposed on Pinnacle Bank's payments to the JPA by the City of Lincoln shall be counted as a part of Pinnacle Bank's payment to the JPA.

(m) Set-Off for Minimum Media Advertising. In the event that Pinnacle Bank has prepaid all of the base installment payments due to the JPA under 3(a) through 3(c) above in accordance with the prepayment provisions of 3(e) above and, thereafter, Pinnacle Bank becomes entitled to a discount under 3(h) above, then Pinnacle Bank shall be entitled to set-off the discount it is eligible for under 3(h) against any bonus payment that it may owe to the JPA under 3(f) above for the term year following the term year during which the minimum media advertising spending under 3(h) above was not met.

(4) **Name of Arena.** On and as of the Effective Date, the name of the Arena shall be the "Pinnacle Bank Arena".

(a) From and after the Effective Date, any and all announcements relating to the Arena or print or broadcast media advertising for the Arena or an Arena Event as defined below, shall refer to the Arena as the "Pinnacle Bank Arena."

(b) "Arena Event" shall mean and include every public event, presentation, or performance that occurs in the Arena, whether or not tickets are issued or offered for sale for admission to any such event, presentation, or performance, whether or not admission is actually charged therefore, and whether the Arena Event is produced by or for the JPA, directly or indirectly, pursuant to permission, license, or lease by the JPA.

(c) The JPA shall require any entity conducting an Arena Event to refer to the Arena as the Pinnacle Bank Arena on ticketing for the Arena Event, in announcements relating to the Arena, and in print or broadcast media advertising for the Arena or an Arena Event. In particular, this provision shall apply to UNL and its use of the Arena under the UNL Agreement as defined in Section (28(d)) below.

(5) **Pinnacle Bank Arena Logo.** The JPA and Pinnacle Bank have agreed upon designs for the Pinnacle Bank Arena Logo including, but not limited to, sizes, coloring, lettering style, and any graphic art standards for usage of the Logo. The Pinnacle Bank Arena Logo (the "Logo") shall consist of one of the graphic designs shown in Exhibit B (attached) including the name "Pinnacle Bank Arena" preceded by the "Diamond."

(6) **Title Sponsor Signage and Visibility Allowance.** It is anticipated by the parties that all costs associated with the design, manufacture, purchase, installation, and sign permits (if any sign permits are required) of the Title Sponsor Signage and Visibility set forth in subparagraph (a) below will not exceed $500,000.00 (the "Anticipated Signage Cost"). The Anticipated Signage Cost shall be the sole and separate responsibility and obligation of the JPA. If the actual costs to design, construct, and install the Title Sponsorship Signs referred to in (a) below exceed the Anticipated Signage Cost then the JPA shall pay such excess cost, unless such excess cost is solely attributable to the act or inaction of Pinnacle Bank in which case Pinnacle Bank shall pay such excess cost. In addition to the Anticipated Signage Cost, the JPA shall be solely and separately responsible for and pay all of the costs associated with all of the signage described in subparagraphs (b) through (g) below. The JPA shall be solely and separately responsible for the ongoing maintenance, repair, and replacement (if necessary) of the specific signs set forth in (a) through (g) below and all utility charges associated with such signs. The cost and expense of any additional signage not set forth below (the "Additional Signage"), which may be

agreed to by the parties to this Agreement shall be the sole and separate responsibility of Pinnacle Bank including, but not limited to, all costs associated with the design, manufacture, purchase, and installation of such Additional Signage; however, unless otherwise agreed to in writing, the JPA shall be solely and separately liable and responsible for the ongoing maintenance, repair, and replacement (if necessary) of any such Additional Signage and all utility charges associated with such Additional Signage.

(a) Exterior Principal Title & Exclusive Sponsor Identification Signs. Three (3) signs on the exterior of the Arena shall display the Logo as follows:

(i) One exterior sign shall be located on the north side of the Arena on the upper façade near the roof and, unless otherwise agreed to in writing by Pinnacle Bank, the dimensions of the name "Pinnacle Bank Arena" shall be at least 160' wide and 13' 6" high, and the dimensions of the "Diamond" shall be at least 15' wide and 26' high;

(ii) One exterior sign shall be located on the Arena above the main south entrance to the Arena and, unless otherwise agreed to in writing by Pinnacle Bank, the dimensions of the name "Pinnacle Bank Arena" shall be at least 60' wide and 5' high, and the dimensions of the "Diamond" shall be at least 6' wide and 10' high;

(iii) One exterior sign shall be located on the Arena above the main northeast entrance to the Arena and, unless otherwise agreed to in writing by Pinnacle Bank, the dimensions of the name "Pinnacle Bank Arena" shall be at least 60' wide and 5' high, and the dimensions of the "Diamond" shall be at least 6' wide and 10' high;

(iv) The JPA shall have the right to install one large "N" sign on the exterior of the Arena. In addition, the JPA shall have the right to install signs on the exterior of the Arena indicating the locations of the box office and the entrance for the premium level as well as an interior sign which will be visible from the outside for the Adidas Husker Authentic Store, the approximate locations of which are shown on the attached Exhibit C. Those signs may include the name of a sponsoring entity. With the exception of the "N" sign, the signs referred to in this subsection shall not be mounted on the exterior at a higher level than the primary Pinnacle Bank Arena signs and the letters on the signs will be no more than three feet in height. None of the signs referenced in this section shall promote or identify any bank, credit union, or any other business which engages in retail, commercial, business, agricultural, or electronic

banking in the State of Nebraska without Pinnacle Bank's prior written consent, which consent may be withheld by Pinnacle Bank in its sole and absolute discretion;

(v) Except as noted above, the signs shall be constructed in accordance with specifications to be mutually agreed upon (which agreement shall not be unreasonably withheld, delayed, or denied by either Party);

(vi) Unless Pinnacle Bank consents in writing to the contrary, which consent may be withheld by Pinnacle Bank in its sole and absolute discretion, the signs identified at (i) through (v) above, together with any additional exterior signs that may be installed on the Arena pursuant to Section (7) (l) or Section (7) (m) below by Pinnacle Bank, shall be the only signs either on the exterior of the Arena or on the interior, but designed to be seen from the outside of the Arena; provided, however, that regardless of the foregoing, exterior directional signs, signs for safety and designating entrance and exit doors, and temporary signs promoting a specific Arena Event may be posted on the exterior of the Arena.

(b) Scoreboard. The Logo shall be prominently displayed on the center hung scoreboard (or any feature which is later installed to serve the same function as the center hung scoreboard) so that it may be easily viewed by spectators seated in all four quadrants of the Arena; and, if possible, on the bottom of the center hung scoreboard. The JPA shall review with Pinnacle Bank the design of the scoreboard and location(s) of the Logo. All final designs, materials, locations, and sizes of the Logo on the scoreboard shall be decided jointly by the JPA and Pinnacle Bank. Neither the JPA nor Pinnacle Bank shall unreasonably withhold or delay its approval of such designs and materials.

(c) Exterior Doors. The JPA shall cause the Logo to appear on the exterior doors at public entrances to the Arena. All final designs and materials for the Logo shall be decided jointly by the JPA and Pinnacle Bank. Neither the JPA nor Pinnacle Bank shall unreasonably withhold or delay its approval of such designs and materials.

(d) Marquee. Pinnacle Bank understands that at this time the JPA's Arena construction budget does not include a marquee sign. Should any marquees be constructed, the JPA shall cause the Logo to be placed on any and all marquees for the duration of this Agreement. Furthermore, should a LED board be included on any marquee and promotional spots be permitted, the LED board shall be operational at least one hour before, during, and one hour after all Arena Events, and Pinnacle Bank shall

receive two and a half (2½) minutes of promotional spots on the LED board for every hour that the LED board is in operation.

(e) Light Pole Banners & Flag Poles. The Logo shall be placed on light pole banners on plaza, sidewalk, or pedestrian bridge light poles adjacent to the Arena in locations to be mutually agreed upon, which shall not be less than every third light pole. Additionally, if any flag poles are installed on or adjacent to the Arena which are controlled by the JPA or the Arena Operator, Pinnacle Bank shall be entitled to have a flag displaying the Logo or the Pinnacle Bank name and logo hung on said flag poles below the flags of the United States of America and the State of Nebraska.

(f) Arena Seats. The Logo shall be placed on all applicable arena seat aisle end panels. All final designs, materials, locations, and sizes shall be decided jointly by the JPA and Pinnacle Bank. Neither the JPA nor Pinnacle Bank shall unreasonably withhold or delay its approval of such designs and materials.

(g) Concourse Signs. Pinnacle Bank will receive two (2) concourse signs on the main concourse and two (2) concourse signs on the upper concourse at locations to be mutually agreed upon. The JPA shall pay the initial costs to design and install the signage. Pinnacle Bank shall pay for any subsequent changes to the signage.

(h) Subject to the rights granted to Pinnacle Bank pursuant to this Agreement, the JPA shall have the exclusive right to seek, negotiate, and obtain agreements regarding the right to all other temporary and/or permanent signage inside or outside the Arena. During UNL events UNL will hold exclusive rights to the LED format (scoreboard, scorer's table, ribbon boards, or other locations) or other temporary signage in the seating bowl.

(i) UNL has the exclusive right to sell, license, or grant the right to name the basketball playing court, UNL locker rooms, HuskerVision production room, athletic medicine areas, and any UNL office space.

(7) **Additional Signage.** From the funds received as the installment payments due hereunder, the JPA shall provide and pay for all costs associated with the design, manufacture, purchase, installation, and sign permits (if any sign permits are required) repair, maintenance, and replacement (if necessary) for the following additional signage at no expense to Pinnacle Bank except where noted:

(a) Visibility at Construction Site. The Logo shall receive visibility at or around the Construction Site in location(s) to be mutually agreed upon.

(b) Directional and Facility Signage. The JPA shall:

(i) cause signage which gives directions to the Arena and which is on buildings, facilities, streets, and rights of way owned by the JPA to identify the Arena as the Pinnacle Bank Arena;

(ii) use its best efforts to cause signage which gives directions to the Arena on buildings, streets, and rights of way not owned by the JPA to identify the Arena as the Pinnacle Bank Arena;

(iii) cause Arena marketing materials and press releases prepared and/or used by the JPA, the Arena Operator, Event Promoters, or Event Sponsors to display the name "Pinnacle Bank Arena" or the Logo, including maps and diagrams produced by the JPA for public distribution;

(iv) cause the appropriate governmental authorities to name the street directly west of the Arena, as shown on Exhibit D attached, "Pinnacle Bank Arena Drive" or "Pinnacle Arena Drive";

(v) request that the appropriate governmental authorities use the name "Pinnacle Bank Arena" on road and highway signs; and

(vi) identify the Arena as the "Pinnacle Bank Arena" and place the Logo on major directional signs on the interior of the Arena and related parking facilities including building directories, elevators, and the like; and

(vii) make its best efforts to have the official address of the Arena include the name "Pinnacle Bank Arena Drive" or "Pinnacle Arena Drive."

(c) South Lobby. Pinnacle Bank shall have the right to use space in the South Lobby for company recognition at a location to be mutually agreed upon. All costs associated with the recognition shall be paid by Pinnacle Bank.

(d) Concourse Kiosks. Pinnacle Bank shall have the right to install kiosks advertising and marketing Pinnacle Bank and its services on the concourses next to the Pinnacle Bank ATMs or the other bank self service machines referred to in Section (12) below at locations to be mutually agreed upon. All costs associated with the design, construction, installation, maintenance, repair, and replacement of the kiosks shall be paid by Pinnacle Bank. Pinnacle Bank may, in its sole discretion and at its sole cost and expense, have the Kiosks staffed by Pinnacle Bank personnel during all Events held at the Arena; however, such personnel shall be

prohibited from handing out materials promoting and/or advertising Pinnacle Bank during all UNL Events.

(e) IPTV. Pinnacle Bank understands that at this time the JPA's Arena construction budget does not include IPTV. Should IPTV be added to the Arena construction budget, Pinnacle Bank will receive ten (10) minutes of exposure evenly distributed throughout the Event, at least half of which time shall be full screen and the other half will be the equivalent of a quarter of the screen, on path of travel and destination television monitors during each Arena Event. Pinnacle Bank shall provide all advertising material and promotional spots at its expense.

(f) Digital Fascia Signage and Scoreboard LED Video Boards and Ring. Pinnacle Bank will receive a minimum of five (5) minutes of exposure on the digital fascia signage during all non-UNL Arena Events during which the digital fascia signage is used and controlled by the JPA or Arena Operator; and a minimum of five (5) minutes of exposure on the scoreboard LED video boards and scoreboard LED ring during non-UNL Arena Events for which the scoreboard LED video boards and the scoreboard LED ring are used and controlled by the JPA or Arena Operator. Pinnacle Bank shall provide the advertising or promotional material for the above-referenced usage.

(g) Floor Mats. The Logo shall be placed on all floor mats which are used inside and outside the Arena at all public entrances into the Arena and at all doorways in the Arena leading from the Arena concourses into the seating bowl of the Arena.

(h) HaymarketNow Website. All references to "West Haymarket Arena" shall be removed and the name "Pinnacle Bank Arena" shall be displayed on the HaymarketNow website. Pinnacle Bank shall have the right to approve the design and location of any Pinnacle Bank Arena references or logos on the HaymarketNow website. The HaymarketNow website shall also include a link to the Pinnacle Bank website. No content on the HaymarketNow website nor any advertising on the HaymarketNow website shall promote or identify any other bank, credit union, or any other business which engages in retail, commercial, business, agricultural, or electronic banking in the State of Nebraska without Pinnacle Bank's prior written consent, which consent may be withheld by Pinnacle Bank in its sole and absolute discretion.

(i) Arena Website. The JPA has secured the domain name www.PinnacleBankArena.com ("Arena Website"). Whenever the URL is displayed, it shall be capitalized as follows: "PinnacleBankArena.com." The JPA shall maintain the Arena Website which shall include a prominent link on its face page to the Pinnacle Bank website. Pinnacle

Bank shall have the right to approve the website layout and all content on the website which approval shall not be unreasonably withheld. If advertising is sold on the Arena Website, Pinnacle Bank shall receive space and time on the Arena Website commensurate with the most prominent website advertiser at no additional cost, provided Pinnacle Bank provides suitable material for use on the website. Provided, however, regardless of the foregoing, no content on the Arena Website nor any advertising on the Arena Website shall promote or identify any other bank, credit union, or any other business which engages in retail, commercial, business, agricultural, or electronic banking in the State of Nebraska without Pinnacle Bank's prior written consent, which consent may be withheld by Pinnacle Bank in its sole and absolute discretion.

(j) Facebook Page and other Social Media. Pinnacle Bank and the Logo will be included on the Arena Facebook page and any other appropriate Arena social media whether currently existing or hereafter developed. Pinnacle Bank shall have the right to approve the Arena Facebook page layout and content as well as the layout and content of any other Arena social media, which approval shall not be unreasonably withheld. Provided, however, that regardless of the foregoing, no content or advertising on the Arena Facebook page, nor any content or advertising on any other Arena social media shall promote or identify any other bank, credit union, or any other business which engages in retail, commercial, business, agricultural, or electronic banking in the State of Nebraska without Pinnacle Bank's prior written consent, which consent may be withheld by Pinnacle Bank in its sole and absolute discretion.

(k) Pinnacle Bank Entrance. The JPA shall provide an expedited entry point for Pinnacle Bank customers on the south side of the Arena at a location to be mutually agreed upon between the parties with the signage to be provided at Pinnacle Bank's expense. The expedited nature of the entry point shall be suspended during times and events when the nature of the event would, in the reasonable opinion of the Arena Operator, interfere with the timely and orderly admission into the event.

(l) South Exterior Façade Signage. At Pinnacle Bank's sole discretion, a sign displaying the Logo may be installed on the south exterior façade of the Arena at Pinnacle Bank's cost; provided, however, to the extent that the actual costs incurred by the JPA in designing, constructing, and installing the Title Sponsorship Signage identified at Section 6(6) (a) (i) through (iii) above are less than the Anticipated Signage Cost and the surplus is not used for either roof signage or additional West Façade Signage as is referenced in Section 7(m) below, the JPA shall contribute the difference to the costs of the design, construction, and installation of South Façade Signage. The sign shall be constructed in accordance with specifications

to be mutually agreed upon (which agreement shall not be unreasonably withheld, delayed, or denied by either Party).

(m) Roof Signage & Additional West Façade Signage. Pinnacle Bank shall have the right, in its sole discretion, to install a sign with, or paint or light the Logo on the roof of the Arena (the "Roof Sign") in a manner so that it is not visible from the ground level at the arena site. The sign shall be constructed in accordance with specifications to be mutually agreed upon (which agreement shall not be unreasonably withheld, delayed, or denied by either Party). Additionally, Pinnacle Bank shall have the right, in its sole discretion, to install an exterior sign on the west side of the Arena on the upper façade near the roof which would have dimensions for the name "Pinnacle Bank Arena" of at least 160' wide and 13'6" high and dimensions of the "Diamond" of at least 15' wide and 26' high (the "West Exterior Sign"). All costs associated with designing, constructing, and installing the Roof Sign and/or the West Exterior Sign shall be paid for by Pinnacle Bank; provided, however, to the extent that the actual costs incurred by the JPA in designing, constructing, and installing the Title Sponsorship Signage identified in Section (6)(a)(i) through (iii) above are less than the Anticipated Signage Cost, the JPA shall contribute the difference to the costs of the design, construction, and installation of the Roof Sign and/or the West Exterior Sign.

(n) Non-UNL Event Signage. In accordance with Section (10) below, Pinnacle Bank shall have a right of first refusal for all temporary signage under the control of the JPA or its operator located in the bowl during all non-UNL events. No signage that is in the Arena as a result of a commercial relationship with the University of Nebraska-Lincoln shall be visible during non-UNL events without Pinnacle Bank's prior written consent, which consent may be withheld by Pinnacle Bank in its sole and absolute discretion.

(o) Concession Stand Signage. If any concession stands located within the Arena contain any separate LED boards or televisions which advertise or promote any products or events other than those being sold in any Arena concession stand, then Pinnacle Bank shall have time and exposure equal to the most prominent advertiser on such medium. Any advertising in any such concession stand shall be subject to the restrictions set forth in Section (9) below regarding a Competing Bank.

(8) **Design Elements for Title Sponsorship Identification**: The specific design of all identification and signage contemplated by this Agreement, including but not limited to the size, color, and location thereof, shall be subject to Exhibit B and to the following provisions:

(a) Subject to the allocation of responsibility for costs set forth in Sections (6) and (7) above, the JPA and Pinnacle Bank shall work together in a commercially reasonable manner to develop the design of the identifications and signage contemplated by this Agreement;

(b) The design shall be subject to the mutual approval of the JPA and Pinnacle Bank which approvals, in both instances, shall not be unreasonably withheld or delayed;

(c) The design shall be subject to the requirements of (and any required approval by) any governmental authority(ies) having jurisdiction over the same other than the JPA; provided, however, that if necessary and/or required by the City of Lincoln, the JPA shall, at its expense, request that the City designate the Arena and its immediate surrounding area as a Special Sign District under 27.69.300 of the City's Municipal Code in order to allow the exterior installation of the signs referred to in Sections (6) and (7) above;

(d) The JPA and Pinnacle Bank shall work together in a commercially reasonable manner to obtain any third party approvals which may be required for the design of the signage contemplated by this Agreement;

(e) Upon final approval of the design for the applicable signage and receipt of any required third party approvals, the JPA shall cause such approved signage to be created and installed consistent with the approved design;

(f) As used herein, design shall include usual and customary art work, schematic drawings, and specifications for fabrication, construction, and installation; and

(g) All changes to the approved designs shall be subject to the same approval process as the originally approved designs. Pinnacle Bank shall pay the cost of any changes that it requests after the initial design has been approved by both parties.

(9) **Banking Services Institutions Category.** Pinnacle Bank shall be the exclusive sponsor of the Arena, the Arena Site, and all social media pertaining to the Arena identified in Sections (7)(h), (7)(i) and (7)(j) above in the bank category. Banks, credit unions, or other businesses which engage in any type of retail, business, commercial , agricultural, or electronic banking, as well as companies operating retail or commercial banking locations in Nebraska (a "Competing Bank") shall be prohibited from marketing any of their products and advertising any of their services in or on the Arena, the exterior of the Arena controlled by the JPA, the Arena Site, or on the social media pertaining to the Arena identified in Sections (7)(h), (7)(i) and (7)(j) above, without the prior written

(10) **Limitation of Other Sponsors.**

(a) Pinnacle Bank recognizes that the JPA may permit other persons or entities to sponsor portions of the Arena (subject to the foregoing provisions). Pinnacle Bank will have the right to review and approve all other Arena-related naming opportunities and agreements and all amendments to any such agreements offered by the JPA. Pinnacle Bank shall have a fifteen (15) day right of first refusal to match any other Arena-related naming agreement received by the JPA from a third party for any portion of the Arena. If Pinnacle Bank exercises this right of first refusal, then the JPA and Pinnacle Bank shall enter into such other naming agreement within forty-five (45) days after such agreement has been received by Pinnacle Bank from the JPA. If Pinnacle Bank does not exercise this right of first refusal, then (subject to the provisions of Section (9) above regarding a Competing Bank) Pinnacle Bank's approval of such other naming agreement shall not be unreasonably withheld or unduly delayed and said approval shall be in writing.

(b) Touring Arena Events which have pre-existing sponsorship agreements that would otherwise be prohibited by this Agreement will be permitted to have temporary advertising in the Arena or in materials promoting the Arena Event. Pre-existing sponsorship agreements means sponsorship agreements which are applicable to the tour as a whole and which are not entered into specifically with respect to the Arena Event. If such Touring Arena Event allows for additional sponsors and/or advertisers and the JPA and/or Arena Operator has the right to sell such sponsorships or advertising, then Pinnacle Bank shall have a right of first refusal identical to the right of first refusal set forth in (a) above to be an additional sponsor and/or advertiser for such Touring Arena Event as long as Pinnacle Bank's sponsorship or advertising is not specifically prohibited by the pre-existing sponsorship agreement of such Touring Arena Event. If the JPA and/or Arena Operator does not have the right to sell the sponsorship or advertising, the JPA and/or Arena Operator shall make best efforts to have the Touring Arena Event contact Pinnacle Bank regarding sponsorship and advertising opportunities.

(11) **Pinnacle Bank Suite and Arena Use and Occupancy**. Concurrent with the Effective Date of this Agreement, Pinnacle Bank shall execute a suite use agreement substantially in the form adopted by the JPA for general use in the Arena ("Pinnacle Bank Suite Use Agreement"). The Pinnacle Bank Suite Use Agreement shall provide for the use and occupancy of a suite by Pinnacle Bank and its invitees (the "Pinnacle Bank Suite").

(a) The Pinnacle Bank Suite shall be Suite #30.

(b) Additional Tickets. The JPA and/or the Arena Operator shall use their best efforts to provide Pinnacle Bank with the opportunity to purchase up to 1%, but not less than eight (8) tickets in each price category of the non-premium publicly available seats in locations to be mutually agreed upon for each Arena Event. Pinnacle Bank's right to purchase tickets is subject to any restrictions established by the Arena Operator or the Event promoter and will expire five days after Pinnacle Bank receives notice from the JPA, the Arena Operator, or the Event Promoter. Pinnacle Bank will not be liable for any fees or charges under this Subsection unless it exercises the option to purchase the tickets, in which case Pinnacle Bank will pay the usual and customary price of the tickets. This provision will not apply to UNL Events held in the Arena.

(c) Backstage Passes. The JPA and/or the Arena Operator shall give Pinnacle Bank 10% of all backstage passes that they control. To the extent the JPA and the Arena Operator do not control any backstage passes for an Arena Event, they will use their best efforts to obtain backstage passes for Pinnacle Bank from the promoter. Pinnacle Bank's right to receive backstage passes is contingent on Pinnacle Bank giving reasonable notice to the JPA or the Arena Operator of Pinnacle Bank's intent to use such passes, after receiving notice of the availability of such passes from the JPA or the Arena Operator. This provision will not apply to UNL Events held in the Arena.

(d) Pinnacle Bank may use the Arena two (2) days per year on dates that are reasonably agreeable to the JPA and Pinnacle Bank when no other event is scheduled (including pre- and post-event activities). Pinnacle Bank will pay all costs associated with operating the Arena in relation to such use, including but not limited to: security, preparation, clean-up, etc.

(e) Pinnacle Bank employees shall have the opportunity to purchase tickets for non-UNL Arena Events prior to Public Sale unless restricted by the promoter of the Event or the licensee.

(f) Pinnacle Bank shall receive public address announcements – the number to be mutually agreed upon, which shall not be less than a total of two and a half (2 ½) minutes for non-UNL events for which the public address system is used and controlled by the JPA or Arena Operator. The announcements may include welcome announcements, thank-you announcements, or promotional announcements. Pinnacle Bank shall provide suggested public address announcements.

(g) Subject to approval of event promoters or licensees, the JPA and the Arena Operator shall arrange for on-site promotions by Pinnacle Bank in connection with a to be agreed upon number of non-UNL Events, which Events shall be selected by the Arena Operator and an authorized representative of Pinnacle Bank. This provision shall not prohibit or limit Pinnacle Bank from operating its concourse kiosks during all Arena Events in accordance with the provisions of Section (7) (d) above.

(12) **ATM Machines**. The following provisions shall apply to ATM machines in the Arena:

(a) Pinnacle Bank shall have the exclusive right to provide all ATM machines installed in the Arena.

(b) Pinnacle Bank shall install and maintain a minimum of three (3) ATM machines in the concourse areas of the Arena at locations mutually agreeable between the JPA and Pinnacle Bank.

(c) The JPA will not charge Pinnacle Bank any rent or fees for hosting the ATM machines. After the initial installation, Pinnacle Bank may from time to time reduce the number of ATMs provided by removing any ATM from locations from which it is no longer commercially reasonable to continue operating.

(d) The JPA shall provide all necessary power and data connections at the ATM locations in the Arena.

(e) The term "ATM machines" as used herein shall be deemed to refer to not only the ATM machines currently used and operated by Pinnacle Bank, but also any type of bank self service machine that ATM machines may evolve into in the future.

(13) **Public Relations Efforts During Start-Up; Operations**.

(a) Public Relations. From the Effective Date until September 1, 2013, the JPA and Pinnacle Bank shall coordinate public relations efforts with respect to the Pinnacle Bank Arena and shall allow each other to review

and comment upon promotional materials in respect to the Pinnacle Bank Arena prior to the use thereof.

(b) Operations. The uniforms of uniformed employees engaged in the operation of the Pinnacle Bank Arena shall bear the Logo. The telephone receptionists for the Arena shall answer the telephone with "Pinnacle Bank Arena."

(c) Additional Exposure.

(i) Tickets for all Arena Events will include the name "Pinnacle Bank Arena" on the face of the ticket including, but not limited to, all UNL Events held in the Arena.

(ii) Parking passes distributed by the JPA or the Arena Operator shall include the name "Pinnacle Bank Arena" or the Logo.

(iii) The media backdrop used by the JPA or the Arena Operator shall include the Logo.

(iv) The name "Pinnacle Bank Arena" or the Logo shall be on event schedules, event posters, business cards, e-mail signatures, facility letterhead, envelopes, fax cover sheets, facility credentials, and facility ID badges used or distributed by the Pinnacle Bank Arena.

(14) **Miscellaneous Title Sponsorship Rights and Limitations Thereon**.

(a) Pinnacle Bank's First Right of Refusal To Remain Arena's Title Sponsor. When the JPA determines (which shall be no later than March 1, 2036) what the terms and conditions will be for sale of the rights associated with the Arena's Title Sponsorship from and after the expiration of the term of this Agreement, the JPA shall first disclose such terms and conditions and offer such rights to Pinnacle Bank.

(b) Pinnacle Bank shall have the exclusive right to negotiate a successor title sponsorship rights agreement with the JPA for a period of six (6) months, beginning March 1, 2036. During this period, the JPA shall not negotiate with any other person or entity for title sponsorship rights of the Arena.

(c) Notwithstanding the provisions of (a) and (b) above, Pinnacle Bank shall have a thirty (30) day right of first refusal to match any sponsorship agreement that the JPA, or its successor in interest, is willing to accept for the period on or after September 1, 2038, provided the sponsorship agreement in question has a net value lower than the last offer the JPA or its successor in interest made to Pinnacle Bank during the initial exclusive negotiation period.

(d) Notwithstanding any other provision hereof, in the event this Agreement is terminated for cause by either party, the first right of refusal granted by this Section shall be null and void.

(15) **Rights to Pinnacle Bank Trademarks and Trade Names.** The use by the JPA of the name "Pinnacle Bank Arena," and all of Pinnacle Bank's trademarks, trade names, and logos (whether or not registered) under the terms and conditions of the Agreement shall inure solely and exclusively to Pinnacle Bank and neither the JPA nor the Arena shall acquire any goodwill or other interest in them. Pinnacle Bank hereby grants to the JPA, and to any third party that has been authorized or required by the JPA to use Pinnacle Bank Arena and/or any of Pinnacle Bank's trademarks, trade names, or logos in connection with the Arena, a limited license to use the name "Pinnacle Bank Arena" (and any such related trademarks, trade names, and logos) for the sole and limited purpose of identification of the Arena. The JPA may also seek Pinnacle Bank's prior written approval of all proposed uses of the "Pinnacle Bank" name and/or logo in connection with the promotion of the Arena, which approval shall not be unreasonably withheld. JPA agrees that it will not use any logo design for the Pinnacle Bank Arena during the term of this Agreement except the logo design jointly approved by the JPA and Pinnacle Bank. Upon the termination of this Agreement or any extension of this Agreement and the receipt by the JPA, or its successor in interest, of a written request from Pinnacle Bank to cease the use of such trademarks, trade names, and/or logos, the JPA, or its successor in interest shall cease all such use in accordance with the terms and provisions of the written request from Pinnacle Bank.

(16) **Binding Effect; Change of Name of Title Sponsor**.

(a) General. This Agreement shall be binding on and shall inure to the benefit of the parties hereto and their successors and assigns.

(b) Change of Identification and Signage In Event of Change of Name of Pinnacle Bank or Assignment of Title Sponsorship Rights. Notwithstanding any other provision hereof, if, during the term of this Agreement, the name of Pinnacle Bank is changed because of a merger, consolidation, acquisition, or other action, or in the event Pinnacle Bank assigns its rights under this Agreement to a third party, then the name of the Arena may be changed from "Pinnacle Bank Arena" to another name; Provided, that any name other than "Pinnacle Bank" shall be subject to the prior written approval of the JPA, which approval shall not be unreasonably delayed or withheld; Provided, further, that no name shall be proposed as the name of the Arena that includes any word, number, symbol, or any combination thereof, that either is the same or substantially the same as the legal, business, or trade name of any tobacco or tobacco-related distributor, manufacturer, or product, or of any alcohol or alcohol-related distributor,

manufacturer, or product. If the JPA approves any such new name proposed for the Arena, all references to "Pinnacle Bank Arena" that are provided herein, including but not limited to signage contemplated in this Agreement, shall be changed to the new, approved name for the Arena. All work required to effectuate any such name change shall be performed by or through the JPA. All costs and expenses associated with any such name change, including but not limited to the JPA project management expenses, shall be paid by Pinnacle Bank within thirty (30) days after the date of the JPA's invoice therefore.

(17) **Indemnification**.

(a) By Pinnacle Bank. Subject to the terms and conditions of this Agreement, Pinnacle Bank hereby agrees to indemnify, defend, and hold harmless the JPA, its Board, officers, employees, agents, volunteers, and their respective successors and assigns from and against all costs, damages, liabilities, claims, causes of actions, and expenses (including reasonable attorney's fees and expenses) of any kind or nature resulting from the content of any signage or panels or any messages or promotions displayed and/or broadcast hereunder in the form furnished and/or approved by Pinnacle Bank, including without limitation, claims, demands, or litigation alleging that said signage, panels, promotions, or messages are defamatory, constitute illegal competition, or unfair trade practice, contain infringement of trademarks or trade names, or constitute a violation of rights of privacy or infringement of copyrights and proprietary rights (collectively "advertising claims"). If the JPA learns of any advertising claim, the JPA shall give Pinnacle Bank prompt notice in writing of such claim. Pinnacle Bank shall, on a regular basis, provide the JPA with full and complete information and updates relating to such advertising claims and shall not enter into any settlement or compromise prior to receipt of written consent of the JPA. The obligations of Pinnacle Bank under this section shall survive the termination or expiration of this Agreement until all such claims are resolved and all relevant statutes of limitation have expired.

(b) By the JPA. Subject to the terms and conditions of this Agreement, the JPA hereby agrees, to the extent permitted by law, to indemnify, defend, and hold harmless Pinnacle Bank, its subsidiaries and affiliates, and each of their respective partners, members, shareholders, managers, directors, officers, employees, agents, and their respective successors and assigns from and against all costs, damages, liabilities, claims, causes of actions, and expenses (including reasonable attorney's fees and expenses) of any kind or nature resulting from or as a result of an allegation that the rights granted to Pinnacle Bank under the terms and provisions of this Agreement violate the advertising, naming, and/or sponsorship rights for the Arena granted by the JPA or the City of Lincoln to any other party, or

any injury to or death of any person (whether third parties or employees, agents, or invitees of either party), or any loss of or damage to any property in any manner occurring as a direct or proximate result of any act or omission of, or attributable to the JPA or any of its officers, employees, agents, or contractors at the Arena under or pursuant to this agreement. Pinnacle Bank shall give the JPA prompt notice in writing of any such claim. The JPA shall, on a regular basis, provide Pinnacle Bank with full and complete information and updates relating to such claims. The obligations of the JPA under this section shall survive the termination or expiration of this Agreement until all such claims are resolved and all relevant statutes of limitation have expired.

(18) **Termination**.

(a) Defaults & Material Breaches. Each of the following shall constitute a breach and material default of this Agreement:

(i) The failure by the JPA to approve a change in the name of the Arena to a name that has been proposed by Pinnacle Bank or its successor and is otherwise permitted under Section 16 hereof;

(ii) The failure by Pinnacle Bank to cure a payment default under this Agreement within thirty (30) days (notwithstanding the right of the JPA to interest on any such sums that become Delinquent);

(iii) Either Party's failure to correct, remedy, or cease a failure or violation of this Agreement as provided in Subsection (b) below;

(iv) Either Party by the actions of any of its officers or officials has committed, or shall commit, any act, tending to shock, insult, or offend a majority of the people of the City of Lincoln, which materially and adversely affects the operation or use of the Arena or materially and adversely impacts the attendance at Events held at the Arena.

(v) The commencement of bankruptcy proceedings by or against Pinnacle Bank, during a time when Pinnacle Bank is not current on any of its payments owed to the JPA and which has not been dismissed within ninety (90) days of the commencement thereof. Upon the occurrence of such event, the JPA has the right to immediately sell any and all rights contained herein.

(vi) In the event that the JPA's rights under this Agreement are terminated by Pinnacle Bank or its successor in interest, and all or any portion of the Base Fees payable pursuant to Section (3) above, have been prepaid by Pinnacle Bank pursuant to Section 3 (e) above, then the amount of the prepaid Base Fees that are attributable to the period of time after the effective date of such termination together with interest thereon from the effective date of such termination at the rate of interest specified in Section (3)(j) above shall be refunded to Pinnacle Bank or its successor or assignee, as appropriate. In the event that Pinnacle Bank's rights under this Agreement are terminated by the JPA or its successor in interest, and all or any portion of the Base Fees payable pursuant to Section (3) above have been prepaid by Pinnacle Bank pursuant to Section 3(e) above, then an amount equal to the lesser of: (1) the prepaid Base Fees that are attributable to the period of time after the effective date of such termination; or (2) the naming rights fees received by the JPA, or its successor in interest, from third party(s) pursuant to an agreement or agreements similar to this Agreement for the period from the effective date of such termination to August 31, 2038, shall be refunded to Pinnacle Bank or its successor or assignee, as appropriate.

(b) Termination For Failure to Correct, Remedy, or Cease Failure or Violation of Agreement Within Reasonable Time After Receipt of Notice Thereof. In the event either Party to this Agreement fails to perform any obligation hereunder or violates any provision of this Agreement, the other Party may give written notice to such Party of such failure and demand the performance of such Party's obligations hereunder or compliance with the terms and conditions hereof within a reasonable period after the date of such notice, which period shall not be less than thirty (30) days. In the event Pinnacle Bank is the Party receiving notice of such failure or violation and Pinnacle Bank does not correct, remedy, or cease such failure or violation within the reasonable time specified in such notice, the JPA may either: (i) subject to the provisions of Section (18)(a)(vi) above, terminate this Agreement, whereupon all obligations of the Parties hereto that had not been incurred as of the effective termination date, including but not limited to the obligation to pay future installment payments, or to thereafter identify the Arena as the "Pinnacle Bank Arena," shall terminate; or (ii) if such failure can be cured by expending funds to clean up, repair, maintain, or replace an item that is the responsibility of Pinnacle Bank, the JPA may, in its sole discretion advance and pay for such item and the costs expended by the JPA for such item, together with interest thereon at the rate of interest specified in Section (3)(j) above from the date such item is paid for by the JPA shall become due and owing by Pinnacle Bank to the JPA within thirty (30) days after the JPA invoices Pinnacle Bank for such item. In the event the JPA is the Party

receiving such notice, Pinnacle Bank may either: (iii) terminate this Agreement in accordance with (c)(i) below and receive any refund that it may be entitled to under the provisions of Section (18)(a)(vi) above; or (iv) if such failure can be cured by expending funds to clean up, repair, maintain, or replace an item that is the responsibility of the JPA, Pinnacle Bank may, in its sole discretion advance and pay for such item and the costs expended by Pinnacle Bank for such item, together with interest thereon at the rate of interest specified in Section (3)(j) above from the date such item is paid for by Pinnacle Bank shall become due and owing by the JPA to Pinnacle Bank within thirty (30) days after Pinnacle Bank invoices the JPA for such item; and Pinnacle Bank shall have no obligation to make any payments to the JPA for the period from the date of the notice until such item has been cleaned up, repaired, maintained, or replaced; and Pinnacle Bank can offset any expenses incurred by it in connection with such clean up, repair, maintenance, or replacement against any amounts due and owing from Pinnacle Bank to the JPA under the terms and provisions of this Agreement.

(c) Remedies Available upon Termination of a Party's Rights.

(i) Pinnacle Bank Remedies. In the event that the JPA's rights under this Agreement are terminated by Pinnacle Bank pursuant to this Section, in addition to any other remedies which may be available to Pinnacle Bank at law or in equity, the annual Base Fee payable pursuant to Section 3 hereof shall be prorated on the basis of 365 calendar days, and Pinnacle Bank shall be entitled to a refund from the JPA, or its successor in interest, of any prepaid Base Fees in accordance with Section (18) (a)(vi) above.

(ii) JPA Remedies. In the event that Pinnacle Bank's rights under this Agreement are terminated by the JPA pursuant to this Section, the JPA, without any further proceedings, may grant and license the title sponsorship rights to the Arena to one or more other persons or entities during any portion of the term remaining under this Agreement and receive license fees therefore; Provided, that notwithstanding such termination, Pinnacle Bank's liability for the additional installment payments to be paid to the JPA hereunder shall not be extinguished, but Pinnacle Bank shall pay to the JPA the difference between the remaining amounts due from Pinnacle Bank to the JPA hereunder and the sum the JPA receives for the title sponsorship from such other persons or entities during the period beginning on the date Pinnacle Bank's rights under this Agreement are terminated and ending on the scheduled expiration date of this Agreement. Such payment shall be made within fifteen (15) days after the date of the JPA's notice to Pinnacle Bank. Such termination and payment shall not relieve Pinnacle Bank from

liability to the JPA for any damages caused by Pinnacle Bank's default and breach and expenses incurred in the re-licensing of the title sponsorship rights with respect to the Arena. In the event that Pinnacle Bank's rights under this Agreement are terminated pursuant to this Section, the JPA shall make a good faith effort to obtain the fair market value for the title sponsorship rights that are licensed to any third party or parties during that portion of the term of this Agreement that follows the effective termination of Pinnacle Bank's rights. Following termination of Pinnacle Bank's rights, the JPA shall have the right, without any liability, and at Pinnacle Bank's cost and expense, to immediately remove from all parts of the Arena all signs promoting Pinnacle Bank and to discontinue any further reference to the title of Pinnacle Bank Arena. Effective on such termination, Pinnacle Bank shall cease: (a) use of any products or campaigns referencing the Arena; and (b) making references to Pinnacle Bank being an Arena sponsor. Provided, further, upon such termination Pinnacle Bank shall be entitled to a refund from the JPA, or its successor in interest, of any prepaid Base Fees in accordance with Section (18) (a) (vi) above.

(19) **Force Majeure; Substantial Damage**. In the event that either Party to this Agreement is unable to perform its obligations hereunder or to enjoy any of its benefits because of the substantial damage or destruction of the Arena due to any cause, including a natural disaster or action or decree of a governmental body with appropriate jurisdiction (hereinafter referred to as a "Force Majeure Event"), the Party that has been so affected shall immediately give written notice to the other Party of such fact and shall do everything possible to resume its performance. Upon receipt of such notice, each Party's obligations hereunder shall be suspended for the period of such Force Majeure Event and, if applicable, the installment payment for the year in which the Force Majeure Event occurs shall be reduced pro rata and Pinnacle Bank shall receive a credit to be applied to future installment payments for the difference between the installment payment paid and the amount of the reduced payment; provided, however, if the Force Majeure event occurs on or before the installment payment due on July 1, 2012 is paid, the pro rata credit will be applied to the installment payments due from Pinnacle Bank to the JPA on or after September 1, 2015.

(a) At Pinnacle Bank's sole option, this Agreement shall be automatically extended for a period equal to the number of days during which the Arena was closed to Events due to a Force Majeure Event.

(b) If the Force Majeure Event lasts for a period of two (2) or more years from and after the date that the other Party receives notice of such Force Majeure Event and the Party that received such notice has been able to

perform its obligations hereunder despite such Force Majeure Event, the Party that received such notice may terminate this Agreement by giving notice thereof to the Party unable to perform because of such Force Majeure Event.

(c) If the JPA is unable to fulfill its obligations due to a Force Majeure Event and chooses not to rebuild or reopen the Arena, the Base Fees payable pursuant to Section (3) hereof shall be prorated to the date of the Force Majeure Event, and the amount of the prepaid Base Fees, if any, that are attributable to the period of time after the Force Majeure Event, together with interest thereon at the interest rate set forth in Section (3) (j) above from the date of the Force Majeure Event, shall be refunded by the JPA, or its successor in interest, to Pinnacle Bank or its successor or assignee, as appropriate.

(20) **Notices**. Any notice or communication to be given by one Party to the other under this Agreement must be in writing; and if given by registered or certified mail, such notice or communication shall be deemed to have been given and received on the third business day following the date on which a registered or certified letter containing such notice or communication, properly addressed, with postage prepaid, is deposited in the United States mail, but if given otherwise than by registered or certified mail, it shall be deemed to have been given when received by the Party to whom it is addressed. Such notices or communications shall be delivered or sent to the following respective addresses or to such other addresses as the parties, from time to time, may specify in writing:

To the JPA: West Haymarket JPA
Attention: Chair
555 South 10th Street, Room 103
Lincoln, NE 68508

With copy to:
City Attorney
City of Lincoln
555 S. 10th Street, Suite 300
Lincoln, NE 68508
(402) 441-7281 - Telephone
(402) 441-8812 - Facsimile

To Pinnacle Bank: Mark Hesser
President
Pinnacle Bank
18081 Burt Street
Omaha, NE 68022
(402) 697-5954 - Telephone
(402) 697-8439 - Facsimile

(21) **Amendments**. No addition to, deletion from, or other modification of any of the provisions hereof shall be valid unless made in writing and signed by an authorized representative of each of the parties hereto.

(22) **Applicable Law; Venue; Miscellaneous Provisions**.

(a) This Agreement shall be construed under the Laws of the State of Nebraska, without regard to conflict of law principles.

(b) The parties agree that venue for any legal action arising out of this Agreement or incident thereto shall be proper in a court of competent jurisdiction in Lancaster County, Nebraska and each party waives any objection to such venue.

(c) This is not a third party beneficiary contract. No person or entity other than a Party signing this Agreement shall have any rights under this Agreement.

(d) Nothing in this Agreement shall be construed to create a partnership or joint venture, nor to authorize any Party hereto to act as agent for or representative of any other Party hereto. Each party hereto shall be deemed an independent contractor and no Party hereto shall act as, or hold itself out as acting as, an agent for any other party hereto.

(23) **Captions**. The titles of the articles, sections, and subsections of this Agreement are for convenience only, and do not define or limit the contents.

(24) **Waivers**. No action other than a written notice by one Party to the other specifically stating that such notice has the effect of a waiver, shall constitute a waiver of any particular breach or default of such other Party. No such notice of waiver from either Party shall waive the other Party's failure to fully comply with any other term, condition, or provision of this Agreement, irrespective of any knowledge any JPA or Pinnacle Bank officer, employee, or agent may have of any breach or default of, or noncompliance with such other term, condition, or provision. No waiver of full performance by either Party shall be constructed, or operate as a waiver of any subsequent default of any of the terms, covenants, and conditions of this Agreement. The payment or acceptance of fees or charges

for any period after a default shall not be deemed a waiver of any right or acceptance of defective performance.

(25) **Cumulative Rights**. All remedies available at law or in equity to either Party for breach of this Agreement are cumulative and may be exercised concurrently or separately, and the exercise of any one remedy shall not be deemed an election of such remedy to the exclusion of other remedies.

(26) **Entire Agreement & Memorandum**. The parties to this Agreement acknowledge that it is a negotiated agreement, that they have had the opportunity to have this Agreement reviewed by their respective legal counsel, and that the terms and conditions of this Agreement are not to be construed against any Party on the basis of such Party's draftsmanship thereof. This Agreement constitutes the entire agreement between the Parties respecting the subject matter hereof and there are no understandings or agreements between them respecting the subject matter hereof, written or oral, other than as set forth herein. Simultaneously with the execution of this Agreement the parties shall also execute a short form memorandum of this Agreement, a true and correct copy of which is attached hereto as Exhibit "A" (the "Memorandum"). Either party may, at their expense, record the Memorandum with the Register of Deeds of Lancaster County, Nebraska or any other entity.

(27) **Agreement Counterparts**. This Agreement may be simultaneously executed in several counterparts, each of which shall be deemed to be an original having identical legal effect and may be delivered by electronic delivery of a digitized signature or by facsimile.

(28) **JPA Representations and Warranties**. The JPA hereby represents to Pinnacle Bank that:

(a) The JPA has full authority to execute, deliver, and perform the obligations of this Agreement;

(b) The JPA has taken all actions, and obtained all approvals, in accordance with and as required by all applicable law to make this Agreement a fully binding and legally enforceable obligation of the JPA;

(c) The terms and provisions of this Agreement are legally binding on the City; and do not violate the terms or provisions of any other agreement or document binding on the JPA or the City including, but not limited to, the UNL Agreement and the Facilities Agreement, as defined below;

(d) The JPA and the City have entered into a legally binding Lease and Operating Agreement with the Board of Regents of the University of Nebraska requiring that the University of Nebraska-Lincoln ("UNL") men's and women's varsity basketball teams play all of their regularly

scheduled home games in Lincoln, Nebraska in the Arena for the period beginning September 1, 2013 to and including August 31, 2043 (the "UNL Agreement");

(e) The JPA will have substantially completed (as defined in the UNL Agreement) the construction of the Arena and all necessary infrastructure to support the Arena on or before September 1, 2013;

(f) Pursuant to the UNL Agreement, the JPA has secured the approval of UNL for all signage to be installed in, on or around the Arena by the JPA or Pinnacle Bank pursuant to this Agreement, and the agreement of UNL to place the name "Pinnacle Bank Arena" on all Arena tickets sold by UNL for any UNL Events held at the Arena;

(g) The City shall obtain and share with Pinnacle Bank a Special Tax Opinion approving this Agreement in accordance with the terms and provisions of the Facilities Agreement entered into by and between the JPA and the City on September 8, 2010 (the "Facilities Agreement");

(h) To the extent allowed by law, neither the JPA nor the City shall knowingly allow or permit any Arena Events to be held at the Arena which would shock, insult, or offend a majority of the people of the City of Lincoln.

(29) **Pinnacle Bank Representations and Warranties.** Pinnacle Bank hereby represents to the JPA that:

(a) It has the full authority to execute, deliver, and perform the obligations of this Agreement;

(b) It has taken all corporate action to approve this Agreement and make this Agreement a fully binding and legally enforceable obligation of Pinnacle Bank;

(c) The terms and provisions of this Agreement do not violate the terms and provisions of any other agreement to which Pinnacle Bank is a party.

In Witness Whereof, the Parties hereto have executed this Agreement on the dates indicated below to be effective on the date of execution by the JPA.

WEST HAYMARKET JOINT
PUBLIC AGENCY

By: _____
Chair of the West Haymarket Joint
Public Agency Board of Representatives

Date: _____

APPROVED AS TO FORM:

_____
JPA Attorney

CITY OF LINCOLN, NEBRASKA

By: _____
Chris Beutler, Mayor of Lincoln

Date: _____

APPROVED AS TO FORM:

_____
City Attorney

PINNACLE BANK

By: _____
Mark A. Hesser, President

Date: _____

STATE OF NEBRASKA)
) ss.
LANCASTER COUNTY)

Subscribed, sworn to and acknowledged before me this _____ day of _____, 20___ by _____, the Chair of the West Haymarket Joint Public Agency Board of Representatives, for and on behalf of said Joint Public Agency.

_____
Notary Public

STATE OF NEBRASKA)
) ss.
LANCASTER COUNTY)

Subscribed, sworn to and acknowledged before me this _____ day of _____, 20___ by Mark A. Hesser, the President of Pinnacle Bank, for and on behalf of said Bank.

_____
Notary Public

Subscribed, sworn to and acknowledged before me this _____ day of _____, 20___ by Chris Beutler, the Mayor of the City of Lincoln, Nebraska, a municipal corporation, for and on behalf of said City.

_____
Notary Public

EXHIBIT LIST

Exhibit	Description
"A"	Memorandum
"B"	Pinnacle Bank Arena Logo
"C"	Exterior Signs
"D"	Pinnacle Bank Arena Drive or Pinnacle Arena Drive

EXHIBIT "A"

MEMORANDUM OF
TITLE SPONSORSHIP AGREEMENT

TO: Whom it may concern

FROM: Pinnacle Bank (the "Bank") and West Haymarket Joint Public Agency (the "JPA")

RE: Title Sponsorship Agreement

DATE: _____, 20___

Please be advised that on the ____ day of _____, 20___, the Bank and the JPA entered into a Title Sponsorship Agreement for the Arena that is being constructed by the JPA on the real estate which is more particularly described on Exhibit 1 which is attached hereto and incorporated herein by this reference (the "Title Sponsorship Agreement"). Pursuant to the Title Sponsorship Agreement certain exclusive and non-exclusive naming rights, rights for signage, and advertising rights for areas located in, on and/or immediately adjacent to the Arena to be constructed on the real estate described on Exhibit 1 hereto by the JPA have been granted by the JPA to the Bank. A complete copy of the Title Sponsorship Agreement which delineates all of the exclusive and non-exclusive rights granted by the JPA to the Bank may be obtained from the JPA. Please govern yourself accordingly.

WEST HAYMARKET JOINT
PUBLIC AGENCY

By: _____
Chair of the West Haymarket Joint
Public Agency Board of Representatives

Date: _____

APPROVED AS TO FORM:

_____
JPA Attorney

PINNACLE BANK

By: _____
Mark A. Hesser, President

Date: _____

EXHIBIT “B”

PINNACLE BANK ARENA LOGO

EXHIBIT "C"

EXTERIOR SIGNS

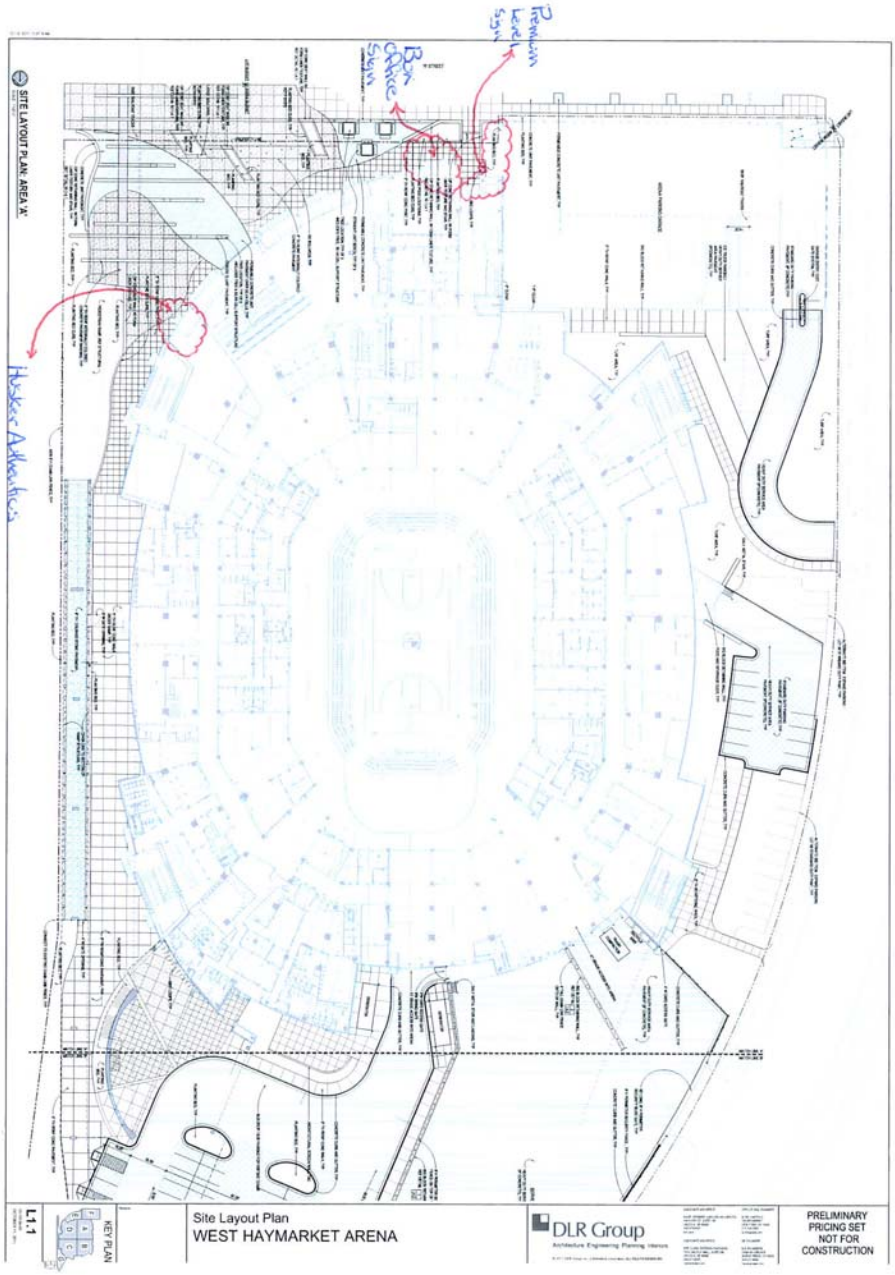

EXHIBIT "D"

PINNACLE BANK ARENA DRIVE / PINNACLE ARENA DRIVE

WH 12-3 Introduce: 1-6-12

RESOLUTION NO. WH- _____

BE IT RESOLVED by the Board of Representatives of the West Haymarket Joint Public Agency:

That the attached Amendment No. 11 to the Agreement for Engineering Services between Olsson Associates dba Lincoln Haymarket Infrastructure Team and the West Haymarket Joint Public Agency, Haymarket Infrastructure Design Project No. 870000, to include the addition of Civic Art consultation to the project, to delete Geotechnical Analysis in Task 9 that was for the Breslow Ice Center, and to make adjustments on hourly rates for the 2012 calendar year is hereby approved and the Chairperson of the West Haymarket Joint Public Agency Board of Representatives is hereby authorized to execute said Amendment No. 11 on behalf of the JPA.

The City Clerk is directed to return a fully executed original of the Agreement to Olsson Associates, 1111 Lincoln Mall, Lincoln, NE 68508.

Adopted this _____ day of January, 2012.

Introduced by:

_____

Approved as to Form & Legality:

_____
Legal Counsel for
West Haymarket Joint Public Agency

West Haymarket Joint Public Agency
Board of Representatives

_____
Tim Clare

_____
Chris Beutler

_____
Eugene Carroll

AMENDMENT NO. 11
to AGREEMENT for ENGINEERING SERVICES
between OLSSON ASSOCIATES
dba LINCOLN HAYMARKET INFRASTRUCTURE TEAM and the
WEST HAYMARKET JOINT PUBLIC AGENCY
HAYMARKET INFRASTRUCTURE DESIGN PROJECT
Project No. 870000

This Contract Amendment is made by and between Olsson Associates, dba Lincoln Haymarket Infrastructure Team, hereinafter called ENGINEER, and the West Haymarket Joint Public Agency, hereinafter called JPA, this _____ day of _____ 2012 and approved by Resolution No. _____.

WHEREAS, it is the mutual desire of the parties hereto to amend the Agreement to provide professional services associated with the Haymarket Infrastructure Design Contract which was entered into on November 18, 2010 under Resolution WH-12, hereinafter called the existing Agreement. The description of work to be added to the existing Agreement under this Amendment generally shall include the addition of Civic Art consultation to the project; deletion of Geotechnical Analysis that was for the Breslow Ice Center as previously included with the Haymarket Parking Lot and Festival Space project as Task No. 9; and adjustments on hourly rates that will be used by the Lincoln Haymarket Infrastructure Team for the 2012 calendar year. A detailed breakdown of scope of services for project A-15 is included in the attachments and as shown below:

- Civic Art – Appendix A-15
- Haymarket Parking Lot, Festival Space and Pedestrian Bridge – Appendix A-9

The fee for Civic Art (A-15) is $59,660. The fee for the deletion of the Geotechnical Analysis is ($16,948), which reduces the total contract value for project A-9 to $1,559,613. The total fee for the work associated with this Amendment 11 is $42,712 which increases the total contract amount from $8,808,904 to $8,851,616.

The JPA recognizes that early work associated with preliminary planning for Civic Art was executed. Therefore, the JPA has provided the Engineer an early notice to proceed with initial planning and work sessions as outlined in Appendix A-15, effective February 1, 2011.

NOW THEREFORE, it is hereby agreed that the existing Agreement be amended to include the services as described herein.

This AMENDMENT shall be deemed a part of, and shall be subject to all terms and conditions of the existing Agreement. Except as modified above, the existing Agreement shall remain in full force and effect.

West Haymarket Joint Public Agency

_____

Title:_____

Engineer – Olsson Associates dba
Lincoln Haymarket Infrastructure Team

By: _____

Title:_____

By: _____

Title:_____

F:\Projects\010-2431\Documents\Contracts\Amendment 11 Documents\Amendment No. 11.doc

APPENDIX A-15
Scope of Services

TASK ORDER 150 - HAYMARKET INFRASTRUCTURE DESIGN PROJECT PUBLIC SPACE AND CIVIC ART

JPA Project Number 870952

General Description of Scope of Services

This scope of services generally includes professional planning and design services to provide an integrated framework for the inclusion of civic art and aesthetic development **within the public rights-of-way and on public property** within the West Haymarket area for the Joint Public Agency (JPA). Numerous locations within the public rights-of-way and on public property can be identified and developed for the inclusion of civic art and aesthetics. The primary locations that exhibit the potential to be developed include the public spaces that will be developed adjacent to the district's primary pedestrian way which links the existing historic train canopy and Sixth Street (Canopy Drive) from O Street north to the proposed Arena site at Sixth and R Streets, north to the proposed community festival space via the proposed pedestrian bridge. The proposed public spaces that should be included in the civic art and aesthetics framework that are located adjacent to this primary pedestrian way include:

- Sixth Street (Canopy Street) public right-of-way/streetscape, including the public spaces associated with the historic train canopy and platform. This public space should be evaluated for opportunities for the development of civic art and aesthetics from O Street to R Street (east and west sides of the street, intersections, pedestrian sidewalks, etc.).
- All public rights-of-way spaces (north, south, east and west) adjacent to the developer constructed community space located south of R Street between Sixth and Seventh Streets.
- R Street public right-of-way between Seventh Street and Arena drive (north and south sides of street).
- The entrance plaza on the south side of the Arena, located north of R Street between Sixth Street (Canopy Street) and Arena Drive.
- The accessible ramp structure that connects the entrance plaza on the south side of the Arena to the elevated Arena north entrance plaza.
- The elevated entrance plaza on the north side of the Arena that links to the proposed pedestrian bridge which connects to the proposed festival/parking area south of Haymarket Park.
- The plaza/green space that terminates the proposed pedestrian bridge at the festival/parking area.
- Festival/parking area green spaces, including entry points and access drives.

Additional locations that should be included in the civic art and aesthetics framework include:

- All entryways into the district, including those at M&N Streets; 1st Street and Cornhusker Highway; Sun Valley and West O Street. Salt Creek Roadway and 8th Street.
- Public rights-of-ways in the Core Area (O to R Streets, Sixth to Arena Drive), including intersections, public sidewalks, etc. The civic art/aesthetics planning framework should also be extended conceptually to the adjacent private development blocks in this core area.
- Amtrak Station and associated environs
- Development block located between Q and R Streets, 7th to Canopy Street.
- The Arena building public spaces such as entrance lobbies, public concourses, parking garage, etc.

- Public parking garages and associated environs located south of R Street adjacent to Arena Drive.

This scope of services provides the means to develop master plan design concepts and highlight a diversity of project opportunities for civic art in order to enhance the West Haymarket district's character and usability. The purpose of this task is to develop a design framework that adheres to the goals and objectives previously outlined by the West Haymarket Integrated Development Plan (2009). The successful civic art/aesthetics framework will complement other land use, public works components, public open space, transportation, and economic development strategies.

This scope of services will be completed in conjunction with the design phases of the multiple individual projects (indicated above).

Following are the task items that are included as part of the scope of services for the Public Space and Civic Art design project.

TASK 1. Project Management

a. *Project Management*

The Design Team Project Manager will serve as point of contact, maintain project schedule and budget, and be responsible for coordinating work of the design team for this project. This work will include providing regular progress reports to support invoicing and updates on design schedule. Project Management efforts will follow appropriate guidance as given in the City of Lincoln's website "Guiding Principles and Procedures (GP&P)"

b. *Coordination with Others*

The Design Team will coordinate their design with agencies and/or Consultants that are involved with this project or adjacent projects. Coordination includes one-on-one meetings with the agencies or Consultants. This work item does not include coordination with utilities which is covered under Task 4 of this scope of services.

c. *Design Memorandum*

Using the City of Lincoln's design memorandum outline, the Design Team will prepare a design memorandum with project criteria and design standard information for submittal and agreement by the Program Manager and the JPA Project Management Team.

TASK 2. General Project Meetings

a. *Kick-Off Meeting*

The kick-off meeting is included under the scope of services for the Design Coordination and Support.

TASK 3. Utility Coordination

a. *Utility Location/Verification*

The Design Team will review the utility locations shown on the plans, and verify these locations during field inspections. After survey is complete, plans will be printed and distributed to the Utility Companies for verification of ownership, type, size, location, and cased or uncased.

The Design Team will request that the Utility Companies return to the Design Team marked up plans with utility verification. The Design Team will incorporate the information into the topography. All utilities identified in the topographic survey and verified by the individual utility will be incorporated into the plans.

The Design Team shall identify and verify with Utility Companies major utility conflicts such as fiber optic lines, gas pipelines, crude oil pipelines, high-pressure waterlines, transmission lines, etc., at the earliest possible time. The Design Team, Program Manager and the JPA Project Management Team will discuss major conflicts and attempt to avoid them. If avoidance is not possible, the Design Team will then request the Utility Company to verify the conflict and provide a preliminary estimate of reimbursable costs associated with the utility relocation. The Design Team will work with the affected Utility Companies to determine the best strategies for relocations and potential mitigation strategies that may be implemented to ensure that the project schedule is not adversely impacted.

TASK 4. Public Involvement

a. *Project Stakeholder Meetings*

The Design Team will conduct four civic art/aesthetics design meetings with project stakeholders and designers to review goals and objectives; review previous planning efforts; review existing and in-process data; and discuss design issues. This meeting will also discuss the historical context of the area and future vision for the West Haymarket district.

b. *Design Work Sessions*

The Design Team will schedule and arrange three design work sessions. The first design meeting (Design Charette No. 1) will include representatives from associated project designers (Arena, Public Parking Garages, Public Infrastructure including pedestrian bridge and ramp, streetscape, developers, etc.) and arts community representatives. Design Team will present various civic art/aesthetics concept ideas to the workshop participants. These alternatives are schematic in nature and are used to bridge the concept development of a civic art plan to the reality of the project sites. Ideas presented in the West Haymarket IDP (2009) will be integrated in the plan.

The second design meeting (Design Charette No. 2) will include representatives from the arts community. The Design Team will facilitate discussion regarding civic art/aesthetics ideas to the workshop participants that are based on the information gathered during the first workshop. The second workshop will focus on more detailed ideas that integrate streetscape design, development and civic art in the district.

The third design meeting (Design Charette No. 3) will include representative from the arts community and will focus on final ideas for the integration of civic art in the district, including the review of a master plan for the long term consideration of civic art in the district.

TASK 5. Framework Submittal

a. *Prepare Alternatives*

Design Team will evaluate and retain the best possible design and framework alternatives generated from the project design workshops. Alternatives shall be documented and shown in the draft framework submittal. The alternatives will also be integrated into the streetscape design plans which will be developed concurrently.

b. *Preliminary Designs*

The Design Team shall prepare a draft report that includes narrative descriptions plans and images. Information to be included in the draft framework submittal shall include the following:

- Introduction.
- Existing Conditions/Context. Including all new improvements under design/construction (these improvements are the setting for all civic art and aesthetics so must be identified, understood and documented).
- Locations of proposed improvements. Each possible public art and aesthetic improvement location will be specifically identified.
- Description of civic art/aesthetics goals for each proposed improvement: serial, permanent, temporary, landmark, terminus, interactive, etc.
- Description of the proposed role of the artist for each proposed improvement
- Description of the relationship of the proposed improvement to the design of the location (i.e. arena building, streetscape, public space, etc.)

c. *Preliminary Construction Phasing*

The Design Team shall prepare a written description and preliminary plan showing proposed phasing of the civic art/aesthetic framework in relation to the construction of the various buildings and features in the West Haymarket District.

d. *Liaison Representation with Arts Community*

The Design Team shall provide periodic support to the arts community subsequent to the completion of the streetscape/public realm design as civic art is integrated into the district's public/private spaces.

Task A-15
Civic Art/Aesthetics
November 15, 2011

	Principal	Project Manager	Designer	Designer CADD	Clerical	Total Hours	Total Labor Fee	
1. Project Managment								
Project Management (Integrated with the Streetscape/Public Realm design effort)	8	8	0	0	0	16	$2,560.00	$2,560.00
2. General Project Meetings								
Kick-off meeting (Mayor, Mayor's Arts Council, Program Mgr., etc.)	4	4	8	0	0	16	$2,000.00	$2,000.00
3. Utility Coordination								
Utility Location/Verification	0	4	0	0	0	4	$480.00	$480.00
4. Public Involvement								
Project Stakeholder Meetings (Up to four meetings during Streetscape/Public Realm design development to update and solicit input from Mayor and Mayor's Arts Council, UDC/HPC, etc.)	12	16	8	0	0	36	$5,040.00	$5,040.00
5. Design Work Sessions with Arts Community								
Design Charette No. 1 with associated project designers (Arena, Garages, Infrastructure including pedestrian bridge and ramp, streetscape, developers, etc.) and Arts Community representatives	12	12	24	0	0	48	$6,000.00	
Design Charette No. 2 with Arts Community representatives, including historical/cultural resources)	12	12	24	0	0	48	$6,000.00	
Final Design Charette No. 3 with Arts Community representatives only	8	8	16	0	0	32	$4,000.00	$16,000.00
5. Submittal (as a part of the Streetscape plan)								
Prepare Alternatives (Art Master Plan) (Integrated into Streetscape/Public Realm plans)	32	24	40	40	0	136	$15,680.00	
Preliminary Design including the following: Existing Conditions/Context; Locations of Proposed Improvements; Description of Civic Art/Aesthetics Goals; Description of Proposed Role of	32	24	40	0	4	100	$13,100.00	

	Artist Description of Relationship of Improvement to Design Preliminary Phasing								
	Liason Representation with Arts Community (Subsequent to completion of Streetscape/ Public Realm Integrated Civic Art design Plan)	24						$4,800.00	$33,580.00
Total Hours		144	112	160	40	4	436		
Total Labor Fee		$28,800.00	$13,440.00	$14,400.00	$2,800.00	$220.00		**$59,660.00**	

Amendment No. 11

West Haymarket Infrastructure Projects

Hourly Wage Adjustments for 2012 Calendar Year

In accordance Paragraph 3.A. of the Contract for Construction Design Services – Modification No. 1, executed on November 18, 2010, for engineering services to be performed by the Lincoln Haymarket Infrastructure Team (LHIT), a provision exists for hourly wage adjustments. The Engineer has the ability to increase hourly rates based upon annual changes in direct labor costs, up to the all Urban Consumer Price Index (CPI) per calendar year for all work that is completed after December 31, 2011.

For the 2012 calendar year, hourly rates shall be increased by up to 3.4%.

A to Z Index | FAQs | About BLS | Contact Us Subscribe to E-mail Updates GO
What's New | Release Calendar | Site Map
Search BLS.gov

Home | Subject Areas | Databases & Tools | Publications | Economic Releases | Beta

Economic News Release

CPI TEXT SIZE PRINT

Table 3. Consumer Price Index for All Urban Consumers (CPI-U): Selected areas, all items index

Table 3. Consumer Price Index for All Urban Consumers (CPI-U): Selected areas, all items index

(1982-84=100, unless otherwise noted)

All items

CPI-U	Pricing schedule (1)	Indexes: Aug. 2011	Sep. 2011	Oct. 2011	Nov. 2011	Percent change to Nov.2011 from-- Nov. 2010	Sep. 2011	Oct. 2011	Percent change to Oct.2011 from-- Oct. 2010	Aug. 2011	Sep. 2011
U.S. city average	M	226.545	226.889	226.421	226.230	3.4	0.1	-0.1	3.5	-0.1	-0.2
Region and area size(2)											
Northeast urban	M	243.033	243.323	243.014	242.652	3.2	-0.3	-0.1	3.6	0.0	-0.1
Size A - More than 1,500,000	M	244.601	244.983	244.534	244.076	3.1	-0.4	-0.2	3.4	0.0	-0.2
Size B/C - 50,000 to 1,500,000 (3)	M	145.339	145.369	145.404	145.335	3.6	0.0	0.0	4.0	0.0	0.0
Midwest urban	M	216.586	216.968	215.653	215.614	3.3	-0.6	0.0	3.3	-0.4	-0.6
Size A - More than 1,500,000	M	216.870	217.360	216.130	216.097	3.2	-0.6	0.0	3.3	-0.3	-0.6
Size B/C - 50,000 to 1,500,000 (3)	M	139.451	139.542	138.573	138.453	3.3	-0.8	-0.1	3.4	-0.6	-0.7
Size D - Nonmetropolitan (less than 50,000)	M	213.009	213.606	212.476	212.907	3.3	-0.3	0.2	3.4	-0.3	-0.5
South urban	M	220.471	220.371	219.969	219.961	3.8	-0.2	0.0	3.7	-0.2	-0.2
Size A - More than 1,500,000	M	221.685	221.242	220.515	220.654	3.4	-0.3	0.1	3.2	-0.5	-0.3
Size B/C - 50,000 to 1,500,000 (3)	M	140.378	140.471	140.303	140.218	3.9	-0.2	-0.1	4.0	-0.1	-0.1
Size D - Nonmetropolitan (less than 50,000)	M	224.613	224.462	224.574	224.714	4.2	0.1	0.1	4.3	0.0	0.0
West urban	M	228.222	229.147	229.195	228.771	3.2	-0.2	-0.2	3.4	0.4	0.0
Size A - More than 1,500,000	M	232.219	233.221	233.259	232.851	3.1	-0.2	-0.2	3.2	0.4	0.0
Size B/C - 50,000 to 1,500,000 (3)	M	138.171	138.564	138.696	138.411	3.3	-0.1	-0.2	3.7	0.4	0.3
Size classes											
A (4)	M	206.524	206.883	206.393	206.201	3.2	-0.3	-0.1	3.3	-0.1	-0.2
B/C (3)	M	140.440	140.584	140.355	140.225	3.6	-0.3	-0.1	3.8	-0.1	-0.2
D	M	219.656	220.391	219.959	220.020	3.7	0.2	0.0	3.8	0.0	-0.2
Selected local areas(5)											
Chicago-Gary-Kenosha, IL-IN-WI	M	219.688	220.027	219.592	219.181	2.9	-0.4	-0.2	2.9	0.0	-0.2
Los Angeles-Riverside-Orange County, CA	M	231.833	233.022	233.049	232.731	3.0	-0.1	-0.1	2.8	0.5	0.0
New York-Northern N.J.-Long Island, NY-NJ-CT-PA	M	250.058	250.559	250.051	249.317	3.0	0.6	-0.3	3.3	0.0	-0.2
Boston-Brockton-Nashua, MA-NH-ME-CT	1	-	245.310	-	245.030	2.9	-0.1	-	-	-	-
Cleveland-Akron, OH	1	-	213.004	-	211.225	2.5	-0.8	-	-	-	-
Dallas-Fort Worth, TX	1	-	209.255	-	209.283	4.0	0.0	-	-	-	-
Washington-Baltimore, DC-MD-VA-WV (6)	1	-	147.658	-	147.565	3.3	-0.1	-	-	-	-
Atlanta, GA	2	212.325	-	209.182	-	-	-	-	3.1	-1.5	-
Detroit-Ann Arbor-Flint, MI	2	213.924	-	212.927	-	-	-	-	3.5	-0.5	-
Houston-Galveston-Brazoria, TX	2	202.445	-	201.398	-	-	-	-	3.2	-0.5	-
Miami-Fort Lauderdale, FL	2	232.749	-	232.241	-	-	-	-	3.8	-0.3	-
Philadelphia-Wilmington Atlantic City, PA-NJ-DE-MD	2	236.196	-	235.440	-	-	-	-	3.0	-0.3	-
San Francisco-Oakland-San Jose, CA	2	234.608	-	235.331	-	-	-	-	3.2	0.3	-
Seattle-Tacoma-Bremerton, WA	2	233.810	-	235.916	-	-	-	-	3.8	0.9	-

1 Areas on pricing schedule 2 (see Table 10) will appear next month.
2 Regions defined as the four Census regions. See technical notes.
3 Indexes on a December 1996=100 base.
4 Indexes on a December 1986=100 base.
5 In addition, the following metropolitan areas are published semiannually and appear in Tables 34 and 39 of the January and July issues of the CPI Detailed Report: Anchorage, AK; Cincinnati-Hamilton, OH-KY-IN; Denver-Boulder-Greeley, CO; Honolulu, HI; Kansas City, MO-KS; Milwaukee-Racine, WI; Minneapolis-St. Paul, MN-WI; Phoenix-Mesa, AZ; Pittsburgh, PA; Portland-Salem, OR-WA; St. Louis, MO-IL; San Diego, CA; Tampa-St. Petersburg-Clearwater, FL.
6 Indexes on a November 1996=100 base.
- Data not available.
NOTE: Index applies to a month as a whole, not to any specific date.

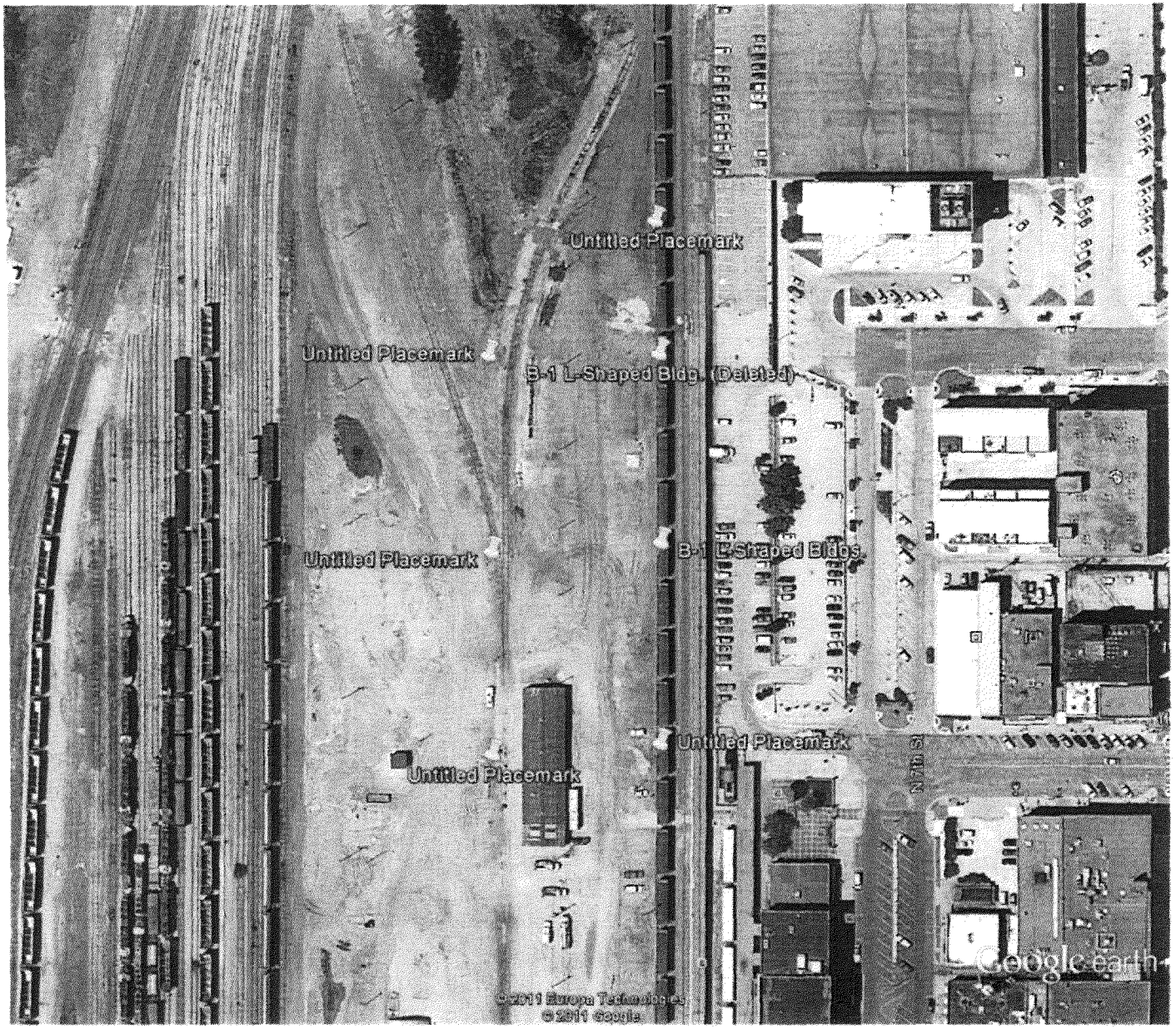

Google earth

feet 500

meters 100

WH 12-4 Introduce: 1-6-12

RESOLUTION NO. WH- _____

BE IT RESOLVED by the Board of Representatives of the West Haymarket Joint Public Agency:

That the attached Consultant Agreement between the West Haymarket Joint Public Agency and Don Herz to render professional assistance in developing and refining cash flow and financing models and analysis, upon the terms and conditions set out in said Consultant Agreement, is hereby approved and the Chairperson of the West Haymarket Joint Public Agency Board of Representatives is hereby authorized to execute said Consultant Agreement.

The City Clerk is directed to return a fully executed original of the Agreement to Don Herz, 1817 St. Andrews Pl., Lincoln, NE 68512.

Adopted this _____ day of January, 2012.

Introduced by:

_____

Approved as to Form & Legality:

_____
Legal Counsel for
West Haymarket Joint Public Agency

West Haymarket Joint Public Agency
Board of Representatives

_____
Tim Clare

_____
Chris Beutler

_____
Eugene Carroll

CONSULTANT AGREEMENT

THIS AGREEMENT is entered into this _____ day of January, 2012, by and between the West Haymarket Joint Public Agency, hereinafter referred to as "JPA" and Don Herz, CPA, hereinafter referred to as "Consultant."

RECITALS

A.

The JPA proposes to engage Consultant in accordance with the terms and conditions set forth herein to render professional assistance in developing and refining cash flow and financing models and analyses ("Consultant Services").

B.

Consultant possesses certain skills, experience, education and competency to perform the Consultant Services on behalf of the JPA, and the JPA desires to engage Consultant for such Consultant Services on the terms herein provided.

C.

Consultant hereby represents that Consultant is willing and able to perform the Consultant Services in accordance with the proposed Consultant Services submitted with this Agreement.

NOW, THEREFORE, IN CONSIDERATION of the above Recitals and the mutual obligations of the parties hereto, the parties do agree as follows:

I.
ADMINISTRATOR OF AGREEMENT

Steve Hubka, Interim Director, of the of City of Lincoln, Nebraska, Finance Department and Treasurer of the JPA, shall be the JPA's representative for the purposes of administering this Agreement and shall have authority on behalf of the JPA to give approvals under this Agreement.

II.

SCOPE OF SERVICES

Consultant agrees to undertake, perform and complete in an expeditious, satisfactory and professional manner the services set forth in Attachment A on behalf of the JPA. In the event there is a conflict between the terms of Attachment A and this Agreement, the terms of this Agreement shall control.

III.

TERM OF AGREEMENT

The term of this Agreement shall commence upon execution of this Agreement by both parties and shall continue until completion of all obligations of this agreement, but in no event longer than December 31, 2013.

IV.

COMPENSATION

The JPA agrees to pay Consultant an hourly fee of fifty-five dollars and no cents ($55.00), not to exceed a total amount of twenty thousand dollars and no cents ($20,000.00) per year, for time spent in performing the services set forth in Attachment "A". Compensation shall be payable monthly upon receipt of supporting documentation acceptable to the JPA for the work completed. All approved payments will be made to the Consultant.

Failure of the JPA to accept the recommendations or work of the Consultant on the basis of differences of professional opinion shall not be the basis for rejection of the work performed by the Consultant or for nonpayment of the Consultant.

V.

SERVICES TO BE CONFIDENTIAL

All services, including reports, opinions and information to be furnished under this Agreement shall be considered confidential and shall not be divulged, in whole or in part, to any person other than to duly authorized representatives of the JPA, without the prior written approval

of the JPA or by order of a court of competent jurisdiction. The provisions in this section shall survive any termination of this Agreement.

VI.
NON-RAIDING CLAUSE

Consultant shall not engage the services of any person or persons presently in the employ of the JPA for work covered by this Agreement without the written consent of the JPA.

VII.
TERMINATION OF AGREEMENT

A. This Agreement may be terminated by the Consultant if the JPA fails to adequately perform any material obligation required by this Agreement ("Default"). Termination rights under this paragraph may be exercised only if the JPA fails to cure a Default within ten (10) calendar days after receiving written notice from the Consultant specifying the nature of the Default.

B. Either party may terminate this Agreement, in whole or part, for any reason for the terminating party's own convenience upon at least thirty (30) days written notice to the other party.

If the Agreement is terminated by either the JPA or Consultant as provided in A or B above, Consultant shall be paid for all services performed, and reimbursable expenses incurred, not to exceed the above-mentioned Agreement amounts, up until the date of termination.

Consultant hereby expressly waives any and all claims for damages or compensation arising under this Agreement except as set forth in this paragraph in the event of termination.

Further, Consultant agrees that, upon termination as provided in this paragraph, it shall not be employed by any developer or other party who is or may be interested in the work effort as defined in Article II, or interested in the decisional process relating to the application of such findings as may result from the tasks performed as defined in Article II for a period of one (1) year after such termination, without prior approval of the JPA.

VIII.

ADDITIONAL SERVICES

The JPA may from time to time, require additional services from the Consultant that are not specified in Attachment "A". Such additional services, including the amount of compensation for such additional services, which are mutually agreed upon by and between the JPA and Consultant shall be effective when incorporated in written amendments to this Agreement.

IX.

FAIR EMPLOYMENT

In connection with the performance of work under this Agreement, Consultant agrees that he shall not discriminate against any employee or applicant for employment with respect to compensation, terms, advancement potential, conditions, or privileges of employment, because of such person's race, color, religion, sex, disability, national origin, ancestry, age, or marital status in accordance with the requirements of Lincoln Municipal Code Chapter 11.08 and *Neb. Rev. Stat.* § 48-1122, as amended.

X.

FAIR LABOR STANDARDS

The Consultant shall maintain Fair Labor Standards in the performance of this Agreement as required by Chapter 73, Nebraska Revised Statues, as amended.

XI.

ASSIGNABILITY

The Consultant shall not assign any interest in this Agreement, delegate any duties or work required under this Agreement, or transfer any interest in the same (whether by assignment or novation), without the prior written consent of the JPA thereto; provided, however, that claims for money due or to become due to the Consultant from JPA under this Agreement may be assigned without such approval, but notice of any such assignment shall be furnished promptly to the JPA.

XII.

INTEREST OF CONSULTANT

Consultant covenants that Consultant presently has no interest, including but not limited to, other projects or independent contracts, and shall not acquire any such interest, direct or indirect, which would conflict in any manner or degree with the performance of services required to be performed under this Agreement. Consultant further covenants that in the performance of this Agreement, no person having any such interest shall be employed or retained by Consultant under this Agreement.

XIII.

OWNERSHIP, PUBLICATION, REPRODUCTION AND USE OF MATERIAL

Consultant agrees to and hereby transfers all rights, including those of a property or copyright nature, in any reports, studies, information, data, digital files, imagery, metadata, maps, statistics, forms and any other works or materials produced under the terms of this Agreement. No such work or materials produced, in whole or in part, under this Agreement, shall be subject to private use or copyright by Consultant without the express written consent of JPA.

JPA shall have the unrestricted rights of ownership of such works or materials and may freely copy, reproduce, broadcast, or otherwise utilize such works or materials as the JPA deems appropriate. The JPA shall also retain all such rights for any derivative works based on such works or materials.

XIV.

COPYRIGHTS, ROYALTIES & PATENTS

Without exception, Consultant represents the consideration for this Agreement includes Consultant's payment for any and all royalties or costs arising from patents, trademarks, copyrights, and other similar intangible rights in any way involved with or related to this Agreement. Further, Consultant shall pay all related royalties, license fees, or other similar fees for any such intangible

rights. Consultant shall defend suits or claims for infringement of any patent, copyright, trademark, or other intangible rights that Consultant has used in the course of performing this Agreement.

XV.

COPYRIGHT; CONSULTANT'S WARRANTY

A. Consultant represents that all materials, processes, or other protected rights to be used in the Consultant Services have been duly licensed or authorized by the appropriate parties for such use.

B. Consultant agrees to furnish the JPA upon demand written documentation of such license or authorization. If unable to do so, Consultant agrees that the JPA may withhold a reasonable amount from Consultant's compensation herein to defray any associated costs to secure such license or authorization or defend any infringement claim.

XVI.

INDEMNIFICATION

JPA shall indemnify and hold harmless Consultant from and against all claims, damages, losses, and expenses, including but not limited to attorney's fees, arising out of or resulting from the performance of this Agreement, that results in any claim for damage whatsoever, including without limitation, any bodily injury, sickness, disease, death, or any injury to or destruction of tangible or intangible property, including any loss of use resulting therefrom, that is caused in whole or in part by JPA or anyone directly or indirectly employed by JPA or anyone for whose acts any of the them may be liable. This section will not require JPA to indemnify or hold harmless the Consultant for any losses, claims, damages, and expenses arising out of or resulting from the gross negligence or intentional act of Consultant. The JPA does not waive its governmental immunity by entering into this Agreement and fully retains all immunities and defenses provided by law with regard to any action based on this Agreement. The provisions of this section survive any termination of this Agreement.

XVII.

INSURANCE

A. Insurance Coverage. At all times during the term of this Agreement, the Consultant shall maintain Automobile Liability Insurance coverage for all of the Consultant's automobiles used in the performance of this Agreement, including owned, hired and non-owned automobiles, Consultant shall keep in full force and effect such Automobile Liability Insurance as shall protect him against claims for damages resulting from bodily injury, including wrongful death, and property damage which may arise from the operations of any owned, hired, or non-owned automobiles used by or for him in any capacity in connection with the carrying out of this contract. The minimum acceptable limits of liability to be provided by a such Automobile Liability Insurance shall be as follows:

I. Bodily Injury Limit $500,000 Each Person/$1,000,000 Each Occurrence

II. Property Damage Limit $500,000 Each Occurrence

III. Combined Single Limit $1,000,000 Each Occurrence

B. Deductibles. All deductibles on any policy shall be the responsibility of the Consultant and shall be disclosed to the City at the time the evidence of insurance is provided.

XVIII.

NOTICE

Any notice or notices required or permitted to be given pursuant to this Agreement may be personally served on the other party by the party giving such notice, or may be served by fax, commercial carrier or certified mail, postage prepaid, return receipt requested to the following addresses:

WEST HAYMARKET JOINT PUBLIC AGENCY:
City Attorney
City of Lincoln
555 S. 10th Street, Suite 300
Lincoln NE 68508

CONSULTANT:
Don Herz
1817 St. Andrews Pl.
Lincoln, NE 68512

XIX.
INDEPENDENT CONTRACTOR

The JPA is interested only in the results produced by this Agreement. Consultant has sole and exclusive charge and control of the manner and means of performance. Consultant shall perform as an independent contractor and it is expressly understood and agreed that Consultant is not an employee of the JPA and is not entitled to any benefits to which JPA employees are entitled, including, but not limited to, overtime, retirement benefits, workmen's compensation benefits, sick leave or and injury leave.

XX.
NEBRASKA LAW

This Agreement shall be construed and interpreted according to the laws of the State of Nebraska.

XXI.
INTEGRATION

This Agreement represents the entire agreement between the parties and all prior negotiations and representations are hereby expressly excluded from this Agreement.

XXII.
AMENDMENT

This Agreement may be amended or modified only in writing signed by both the JPA and Consultant.

XXIII.
SEVERABILITY

If any provision of this Agreement shall be held to be invalid or unenforceable for any reason, the remaining provisions shall continue to be valid and enforceable. If a court finds that any provision of this Agreement is invalid or unenforceable, but that by limiting such provision it would

become valid and enforceable, then such provision shall be deemed to be written, construed, and enforced as so limited.

XXIV.
WAIVER OF CONTRACTUAL RIGHT

The failure of either party to enforce any provision of this Agreement shall not be construed as a waiver or limitation of that party's right to subsequently enforce and compel strict compliance with every provision of this Agreement.

XXV.
AUDIT AND REVIEW

The Consultant shall be subject to audit and shall make available to a contract auditor copies of all financial and performance related records and materials germane to this Agreement, as allowed by law.

XXVI.
FEDERAL IMMIGRATION VERIFICATION

Consultant agrees to complete the United States Citizenship Attestation Form as provided by the JPA and attach it to the Agreement.

XXVIII.
REPRESENTATIONS

Each party hereby certifies, represents and warrants to the other party that the execution of this Agreement is duly authorized and constitutes a legal, valid and binding obligation of said party.

IN WITNESS WHEREOF, Consultant and the JPA do hereby execute this Agreement as of the Execution Date set forth above.

WEST HAYMARKET JOINT PUBLIC AGENCY

By: _____
Chair

DON HERZ

By: _____

ATTACHMENT "A"

Scope of Services:

- Update the Michael O'Sullivan cash flow analysis for the WHJPA as of 12/31/2011.
- Periodically update the model as estimated revenues/receipts become more precise.
- Present updates of the Model to the WHJPA Chair, Treasurer and City staff.
- Assist with project ending reconciliation for compliance with Bond provisions/covenants and University lease agreement.
- Assist with other WHJPA financing tasks as requested.
- Prepare a two page or less executive summary of the financing plan for the Turnback tax application
- Modifiy the model to track actual numbers compared to pre-election and updated projections.
- Exploring whether additional projects can be funded.

Examples of work:

- Review the format of the existing model and make changes for improved readability.
- Examine existing known revenue sources and expenditures. For example, debt payments, tax receipts, pledges, lodging taxes, etc.
- Review and revise estimates of other sources/uses and update the model.

Sources of information:

- Existing O'Sullivan model
- City/JPA financial records and audit reports.
- PC Sports project estimates.
- CS&L estimates of arena related revenues.
- SMG contract and SMG staff
- Lease agreement with the University
- District Energy Corp. financing analysis and impact on the WHJPA
- Ameritas and Gilmore Bell regarding future financings
- Discussions with WHJPA staff and contractors regarding Vision 2015 pledges; TIF revenues; developer contributions; turn back tax and county lodging tax receipts.

UNITED STATES CITIZENSHIP ATTESTATION FORM
FOR INDIVIDUAL CONSULTANT

For the purposes of complying with Neb. Rev. Stat. §§ 4-108 through 4-114, I attest as follows:

☒ I am a citizen of the United States.

OR

☐ I am a qualified alien under the Federal Immigration and Nationality Act. My immigration status and alien number are as follows:

_____, and I agree to provide a copy of the USCIS (United States Citizenship and Immigration Services) documentation upon request required to verify the Consultant's lawful presence in the United States using the Systematic Alien Verification for Entitlements (SAVE) Program.

I hereby attest that my response and the information provided on this form and any related application for public benefits are true, complete and accurate and I understand that this information may be used to verify my lawful presence in the United States. I understand and agree that lawful presence in the United States is required and the consultant may be disqualified or the contract terminated if such lawful presence cannot be verified as required by Neb. Rev. Stat. § 4-108.

PRINT NAME:

Donald R. Herz

(First, Middle, Last)

SIGNATURE:

DATE: 12/27/2011

WH 12-5 Introduce: 1-6-12

RESOLUTION NO. WH- _____

BE IT RESOLVED by the Board of Representatives of the West Haymarket Joint Public Agency:

That the attached Contract Agreement between the West Haymarket Joint Public Agency and TCW Construction Inc. to perform PCB Remediation of the Alter Sliver for an amount of $414,937.00 is hereby approved and the Chairperson of the West Haymarket Joint Public Agency Board of Representatives is hereby authorized to execute said Contract Agreement on behalf of the JPA.

The City Clerk is directed to return a fully executed copy of the Contract Agreement to TCW Construction Inc., 141 M Street, Lincoln, NE 68508.

Adopted this _____ day of January, 2012.

Introduced by:

_____

Approved as to Form & Legality:

_____
Legal Counsel for
West Haymarket Joint Public Agency

West Haymarket Joint Public Agency
Board of Representatives

_____
Tim Clare

_____
Chris Beutler

_____
Eugene Carroll

WEST HAYMARKET JOINT PUBLIC AGENCY (JPA)
BID NO. 11-268 ADDENDUM 4

C O N T R A C T A G R E E M E N T

THIS CONTRACT AGREEMENT ("Contract") is made and entered into this day of _____, 20___, by and between TCW CONSTRUCTION, INC., hereinafter called the Contractor, and the WEST HAYMARKET JOINT PUBLIC AGENCY, hereinafter called JPA.

RECITALS

WHEREAS, JPA has caused to be prepared, in accordance with law, Specifications, Plans, and other Contract Documents for the Work herein described, and has approved and adopted said documents and has caused to be published an advertisement for and in connection with said Work, to wit:

Alter Sliver Remediation

WHEREAS, the Contractor, in response to such advertisement, has submitted to the JPA, in the manner and at the time specified, a sealed Proposal in accordance with the terms of said advertisement.

WHEREAS, JPA, in the manner prescribed by law, has publicly advertised, opened, examined, and canvassed the Proposals submitted in response to such advertisement, and as a result of such canvass has determined and declared the Contractor to be the lowest and best bidder for the said Work for the sum or sums named in the Contractor's Proposal. Copies of the bid documents and the Contractor's proposal are attached hereto as Exhibit A.

WHEREAS, construction of the Arena is currently being carried out on property owned by BNSF Railway Company (BNSF) or controlled by BNSF under an easement for exclusive use (collectively "BNSF Property") or within 50 feet of the BNSF Property.

WHEREAS, if the Work is carried out on BNSF Property or within 50 feet of BNSF Property, the Work must be performed in accordance with (i) the terms and conditions of the Temporary Construction and Access License as amended by the First Amendment and to be further amended by a Second Amendment (collectively the "License") between BNSF and the JPA and (ii) the terms and conditions of the Construction and Maintenance Agreement ("C&M Agreement") between BNSF and the City of Lincoln as assigned to the JPA. Copies of the License and C&M Agreement are attached hereto as Exhibit B and Exhibit C, respectively.

WHEREAS, Contractor understands and acknowledges that pursuant to the C&M Agreement, the provisions in Section 3.2.9 therein are required to be included in this Contract and that the JPA is further required to cause Contractor to comply with the City Contractor requirements in Section 3.3 and 3.4 of the C&M Agreement.

WHEREAS, the use of the term "City of Lincoln" in the License and the C&M Agreement shall be deemed to refer to the JPA.

WHEREAS, Contractor possesses certain skills, experience, education and competency to perform the Work on behalf of the JPA and the JPA desires to engage Contractor for such services on the terms and conditions provided herein.

WHEREAS, Contractor is willing and able to perform the Work in accordance with this Contract.

NOW, THEREFORE, in consideration of the mutual covenants and agreements of the Parties contained herein and incorporating all of the above Recitals into this Contract as if fully set forth herein, the Contractor and JPA have agreed and hereby agree as follows:

PERFORMANCE OF WORK - The Contractor agrees to (a) furnish all tools, equipment, supplies, superintendence, transportation, and other construction accessories, services, and facilities; (b) furnish all materials, supplies, and equipment specified to be incorporated into and form a permanent part of the complete Work; (c) provide and perform all necessary labor in a substantial and workmanlike manner and in accordance with the provisions of the Contract Documents; and (d) execute, construct, and complete all Work included in and covered by JPA's official award of this Contract to the Contractor, such award being based on the acceptance by JPA of the Contractor's Proposal as set forth in Exhibit A.

BNSF CONTRACT REQUIREMENTS. Contractor agrees that the provisions in Section 3.2.9 of the C&M Agreement are made part of this Contract. Contractor agrees to comply with the requirements of Section 3.2.9 as well as the Contractor requirements in Sections 3.3 and 3.4 of the C&M Agreement. Contractor agrees that if work is being performed on or within fifty (50) feet of BNSF Property Contractor will comply with the Contractor Requirements attached as Exhibit C to the C&M Agreement) and execute and deliver a Contractor Right of Entry in the form of Exhibit C-1(A) attached to the C&M Agreement prior to entering BNSF Property to perform the Work. Contractor further agrees that prior to entering BNSF Property to perform the Work, Contractor shall complete the safety training program at the website *www.contractororientation.com* and the e-RAILSAFE as more particularly set forth in Section 3.3.4 of the C&M Agreement. Contractor further agrees that each and every employee of the Contractor shall possess a card certifying completion of the safety training program and the e-RAILSAFE security program prior to entering upon BNSF Property.

COMPENSATION - JPA agrees to pay to the Contractor for the performance of the Work embraced in this Contract, and the Contractor agrees to accept as full compensation therefore, the sums and prices for all Work covered by and included in the Contractor's Proposal awarded by the JPA to the Contractor award, payment thereof to be made in the manner provided in Article VIII of the City of Lincoln Standard Specifications for Municipal Construction (2011 Edition).

COMPLETION DATE - The Contractor agrees that the Work in this Contract shall begin as soon after the Notice to Proceed as is necessary for the Contractor to complete the Work within the number of calendar days allowed and prior to the stated completion date. The completion date shall be no later than March 1, 2012.

INDEMNIFICATION - The following Indemnification provisions are in addition to and not in lieu of the Assumption of Liability and Indemnification provision in Article VI.B. of the City of Lincoln Standard Specifications for Municipal Construction (2011 Edition).

A. INDEMNIFICATION OF JPA.

TO THE FULLEST EXTENT PERMITTED BY LAW, CONTRACTOR SHALL RELEASE, INDEMNIFY, DEFEND AND HOLD HARMLESS JPA AND JPA'S MEMBERS, SUCCESSORS, ASSIGNS, LEGAL REPRESENTATIVES, OFFICERS, EMPLOYEES AND AGENTS FOR, FROM AND AGAINST ANY AND ALL CLAIMS, LIABILITIES, FINES, PENALTIES, COSTS, DAMAGES, LOSSES, LIENS, CAUSES OF ACTION, SUITS, DEMANDS, JUDGMENTS AND EXPENSES (INCLUDING, WITHOUT LIMITATION, COURT COSTS AND ATTORNEYS' FEES) OF ANY NATURE, KIND OR DESCRIPTION OF ANY PERSON (INCLUDING, WITHOUT LIMITATION, THE EMPLOYEES OF THE PARTIES HERETO) OR ENTITY DIRECTLY OR INDIRECTLY (COLLECTIVELY, "LIABILITIES") ARISING OUT OF, RESULTING FROM OR CAUSALLY RELATED TO (IN WHOLE OR IN PART):

(i) ANY RIGHTS OR INTERESTS GRANTED TO CONTRACTOR PURSUANT TO THIS AGREEMENT;

(ii) THE USE, OCCUPANCY OR PRESENCE OF CONTRACTOR AND CONTRACTOR PARTIES (DEFINED BELOW) AND/OR ANY WORK PERFORMED BY CONTRACTOR AND CONTRACTOR'S CONTRACTOR PARTIES IN, ON, OR ABOUT BNSF'S PROPERTY OR RIGHT-OF-WAY AND/OR THE WORK AREA;

(iii) ANY ENVIRONMENTAL MATTERS ARISING FROM CONTRACTOR AND/OR CONTRACTOR PARTIES' USE AND OCCUPANCY OF BNSF'S RIGHT-OF-WAY OR OTHER BNSF PROPERTY, INCLUDING WITHOUT LIMITATION USE AND OCCUPANCY OF BNSF'S RIGHT-OF-WAY OR OTHER BNSF PROPERTY IN CONNECTION WITH PERFORMANCE OF THE WORK;

(iv) ANY DAMAGE TO OR DESTRUCTION OF ANY TELECOMMUNICATION LINES IN CONNECTION WITH THE WORK BY CONTRACTOR AND/OR CONTRACTOR PARTIES, INCLUDING BUT NOT LIMITED TO (A) ANY INJURY TO OR DEATH OF ANY PERSON EMPLOYED BY OR ON BEHALF OF ANY TELECOMMUNICATIONS COMPANY, AND/OR ITS CONTRACTORS, AGENTS AND/OR EMPLOYEES AS A RESULT OF SUCH DAMAGE OR DESTRUCTION, AND/OR (B) ANY CLAIM OR CAUSE OF ACTION FOR ALLEGED LOSS OF PROFITS OR REVENUE BY, OR LOSS OF SERVICE BY A CUSTOMER OR USER OF SUCH TELECOMMUNICATION COMPANY(IES) AS A RESULT OF SUCH DAMAGE OR DESTRUCTION;

(v) CONTRACTOR'S BREACH OF THE TERMS AND CONDITIONS OF THIS AGREEMENT; OR

(vi) ANY ACT OR OMISSION OF CONTRACTOR OR ITS OFFICERS, AGENTS, INVITEES, EMPLOYEES OR SUBCONTRACTORS (SUCH OFFICERS, AGENTS, INVITEES, EMPLOYEES AND SUBCONTRACTORS BEING REFERRED TO HEREIN INDIVIDUALLY AS A "CONTRACTOR PARTY" AND COLLECTIVELY, "CONTRACTOR PARTIES"), OR ANYONE DIRECTLY OR INDIRECTLY EMPLOYED BY ANY OF THEM, OR ANYONE THEY CONTROL OR EXERCISE CONTROL OVER.

THE LIABILITY ASSUMED BY CONTRACTOR WILL NOT BE AFFECTED BY THE FACT, IF IT IS A FACT, THAT ANY DAMAGE, DESTRUCTION, INJURY OR DEATH WAS OCCASIONED BY OR CONTRIBUTED TO BY THE NEGLIGENCE OF JPA, ITS AGENTS, SERVANTS, EMPLOYEES OR OTHERWISE, BUT EXCLUDING CLAIMS WHOLLY CAUSED BY JPA'S SOLE NEGLIGENCE AND EXCLUDING CLAIMS TO THE EXTENT THAT SUCH CLAIMS ARE CAUSED BY THE WILLFUL MISCONDUCT OR GROSS NEGLIGENCE OF JPA.

B. INDEMNIFICATION OF BNSF. Contractor agrees to comply with the Indemnification requirements of the Contractor to indemnify and hold harmless BNSF found in the C&M Agreement and the Contractor's Right of Entry.

INSURANCE – The following insurance requirements are in lieu of the Insurance Requirements for all City Contracts found in Article X.B. of the City of Lincoln Standard Specifications for Municipal Construction (2011 Edition).

A. JPA Insurance Requirements. Contractor shall at all times during the term of this Agreement purchase and maintain in place insurance coverage as required by the Insurance Requirements for All West Haymarket Joint Public Agency Contracts (Exhibit D).

B. BNSF Insurance Requirements. Contractor shall at all times during the term of this Contract purchase and maintain the Insurance requirements of BNSF found in the C&M Agreement and the Contractor's Right of Entry .

Contractor agrees to provide all types of insurance required by either the JPA or BNSF. Contractor will furnish coverages against any and all perils required by either the JPA or BNSF. In the event Contractor discovers a discrepancy in coverage limits, Contractor will provide the larger amount satisfying both JPA and BNSF requirements.

DAVIS-BACON ACT – Contractor agrees to comply with the Davis-Bacon Act contract provisions set forth in 29 C.F.R. §5.5 attached to the Other Attached Contract Documents (Exhibit D) and to pay the prevailing wages set forth in the wage determination attached to the Bid Documents (Exhibit A).

CONTRACT DOCUMENTS - The Contract Documents comprise the Contract, and consist of the following, whether or not attached hereto:

1. Bid Documents (Exhibit A)
2. License (Exhibit B)
3. Construction and Maintenance Agreement (Exhibit C)
4. Other Attached Contract Documents (Exhibit D)
   a. Commentary to Accompany Construction Bonds.
   b. Construction Performance Bond.
   c. Construction Payment Bond
   d. Insurance Requirements for all West Haymarket Joint Public Agency Contracts.
   e. Executive Order. No. 83319.
   f. Modified BNSF Insurance Certification Process (10-21-2011).
   g. 29 C.F.R. § 5.5 Contract Provisions
5. Other Non-Attached Contract Documents
   a. City of Lincoln Standard Specifications for Municipal Construction (2011 Edition). References to City in the Standard Specifications shall mean JPA, references to City Project Manager shall mean PC Sports. Notwithstanding any provisions to the contrary in the Standard Specifications, Change Orders shall be approved in accordance with the JPA's Change Order Process adopted by JPA Resolution No. WH00195.
   b. Lincoln Standard Plans 2010.
   c. Project Plans, Specifications, and Profile Detail Sheets
   d. Any executed Addenda or Change Orders.
   e. Sales Tax Exempt Forms (to be provided upon award of the Special Purchase)
      i. Form of Nebraska Resale or Exempt Sales Certificate.
      ii. Form of Purchasing Agent Appointment.
      Note: Any portion of this project used for providing water service, such as pipe for water mains, are not tax exempt and are subject to sales and use tax.
      Note: The remainder of this project, including items exclusively used for providing fire protection, such as fire hydrants, is exempt from sales and use taxes.

This Contract, together with the other Contract Documents herein above mentioned, form this Contract and they are as fully a part of the Contract as if hereto attached or herein repeated.

The Contractor and JPA hereby agree that all the terms and conditions of this Contract shall, by these presents, be binding upon themselves, and their heirs, administrators, executors, legal and personal representatives, successors, and assigns.

IN WITNESS WHEREOF, the Contractor and JPA do hereby execute this Contract.

CONTRACTOR: **TCW CONSTRUCTION, INC.**

By: _____
Title: _____

JPA: **WEST HAYMARKET JOINT PUBLIC AGENCY**

By: _____
Chris Beutler, Chairperson of the West Haymarket Joint Public Agency Board of Representatives

EXHIBIT A

Bid Documents

CITY OF LINCOLN NEBRASKA

LANCASTER COUNTY NEBRASKA

Return to Login • Supplier Registration

Bid Opportunity Detail

Bid Information

Organization	Lincoln Purchasing (Lincoln Purchasing)
Buyer Name	Deb Winkler Systems Administrator
Buyer Email	dwinkler@lincoln.ne.gov
Buyer Phone	1 (402) 441-7410
Buyer Fax	1 (402) 441-6513
Bid Number	11-268 Addendum 4
Bid Title	Alter sliver Remediation for West Haymarket JPA
Bid Type	Bid
Bid Security	Sealed
Issue Date & Time	12/6/2011 1:10:45 PM Central
Close Date & Time	12/27/2011 12:00:00 PM Central - **Time Left:**
Bid Notes	Attached Addendum No. 4.
Bid Status	Unsealed
Status Reason	Bid request unsealed by GCFDLW.

Contact Information

Address	Purchasing 440 S. 8th St. Lincoln, NE 68516 USA
Contact Name	Vince Mejer Purchasing Agent
Department	Purchasing
Floor/Room	Suite 200
Contact Phone	1 (402) 441-8314
Contact Fax	1 (402) 441-6513
Contact Email	vmejer@lincoln.ne.gov

Event Activities

Activity Date	Title	Description
12/14/2011 2:00:00 PM CST	Pre-Bid	A pre-bid conference will be held Wednesday, December 14, 2011 at 2:00 p.m. in the Purchasing Office, 440 So. 8th St., Suite 200, Lincoln, NE. All interested contractors are strongly encouraged to attend.

Bid Documents

Document	Format	Description
Invitation Document	Adobe (PDF)	PDF Invitation to Bid
Bid Tabulation by Supplier Spreadsheet	Spreadsheet (XLS)	Bid Tabulation by Supplier Spreadsheet
Bid Tabulation by Line Item Spreadsheet	Spreadsheet (XLS)	Bid Tabulation by Line Item Spreadsheet

Bid Attachments

Header	11-268_notice.pdf (7KB)	Notice to Bidders
Header	Instructions to Bidders- JPA - B 12-10.pdf (84KB)	Instructions to Bidders
Header	Contract - JPA.pdf (61KB)	Sample Contract
Header	Davis_Bacon_Wages.pdf (919KB)	Davis Bacon Act
Header	11-268 spec.pdf (283KB)	Specifications
Header	11-268_attA.pdf (1.12MB)	Attachment A
Header	11-268_attB.pdf (6KB)	Attachment B
Header	11-268_Fig1.pdf (238KB)	Figure No. 1
Header	11-268_Fig2.pdf (194KB)	Figure No. 2
Header	11-268ad.1.pdf (104KB)	Addendum No. 1
Header	11-268ad.2watt.pdf (1.50MB)	Addendum No. 2
Header	11-268ad.3.pdf (6KB)	Addendum No. 3
Header	11-268ad4.pdf (144KB)	Addendum No. 4
Line 2	11-268 Alter Sliver Remediation Ad2 Bid Proposal.XLS (179KB)	Itemized pricing (per Addendum No. 2)

Exhibit A

City of Lincoln/Lancaster County

Bid Information

Bid Owner	Deb Winkler Systems Administrator
Email	dwinkler@lincoln.ne.gov
Phone	1 (402) 441-7410
Fax	1 (402) 441-6513
Bid Number	11-268 Addendum 4
Title	Alter sliver Remediation for West Haymarket JPA
Bid Type	Bid
Issue Date	12/06/2011
Close Date	12/27/2011 12:00:00 PM

Contact Information

Address	Purchasing 440 S. 8th St. Lincoln, NE 68516
Contact	Vince Mejer Purchasing Agent
Department	Purchasing
Building	
Floor/Room	Suite 200
Telephone	1 (402) 441-8314
Fax	1 (402) 441-6513
Email	vmejer@lincoln.ne.gov

Ship to Information

Address	JPA 555 S. 10th St. Lincoln, NE 68508
Contact	
Department	
Building	
Floor/Room	
Telephone	(402)
Fax	
Email	

Supplier Information

Company Name _____

Contact Name _____

Address _____

_____

_____

Telephone _____

Fax _____

Email _____

Signature _____

Supplier Notes

_____

Date / /

Bid Notes

Attached Addendum No. 4.

Bid Activities

Date	Name	Description
12/14/2011 2:00:00 PM	Pre-Bid	A pre-bid conference will be held Wednesday, December 14, 2011 at 2:00 p.m. in the Purchasing Office, 440 So. 8th St., Suite 200, Lincoln, NE. All interested contractors are strongly encouraged to attend.

Bid Messages

Bid Attachments

The following attachments are associated with this opportunity and will need to be retrieved separately

Line	Filename	Description
Header	11-268_notice.pdf	Notice to Bidders
Header	Instructions to Bidders- JPA - B 12-10.pdf	Instructions to Bidders
Header	Contract - JPA.pdf	Sample Contract
Header	Davis_Bacon_Wages.pdf	Davis Bacon Act

Exhibit A

Header	11-268 spec.pdf	Specifications
Header	11-268_attA.pdf	Attachment A
Header	11-268_attB.pdf	Attachment B
Header	11-268_Fig1.pdf	Figure No. 1
Header	11-268_Fig2.pdf	Figure No. 2
Header	11-268ad.1.pdf	Addendum No. 1
Header	11-268ad.2watt.pdf	Addendum No. 2
Header	11-268ad.3.pdf	Addendum No. 3
Header	11-268ad4.pdf	Addendum No. 4
1	11-268 Alter Sliver Remediation Ad2 Bid Proposal.XLS	Itemized pricing (per Addendum No. 2)

Bid Attributes

Please review the following and respond where necessary

#	Name	Note	Response
1	City = JPA	I acknowledge that wherever the City of Lincoln is referenced in this bid, it shall mean the West Haymarket Joint Public Agency (JPA).	_____ (Required)
2	NDOR Specs for Hwy Construction	I acknowledge reading and understanding the current Nebraska Department of Road's Standard Specifications for Highway Construction Supplemental Specifications to the Standard Specifications for Highway Construction, view at: http://www.dor.state.ne.us/ref-man/	_____ (Required)
3	Standard Specifications for Municipal Construction	I acknowledge reading and understanding the current City of Lincoln Standard Specifications for Municipal Construction and Lincoln Standard Plans (including General Provisions and Requirements, and Material and Construction Specifications) View at: http://www.lincoln.ne.gov/city/pworks/engine/dconst/standard/stndspec/index.htm	_____ (Required)
4	Instructions to Bidders	I acknowledge reading and understanding the Instructions to Bidders.	_____ (Required)
5	Insurance Requirements	I acknowledge reading and understanding the Insurance Requirements.	_____ (Required)
6	Specifications	I acknowledge reading and understanding the Specifications, Attachments and Figures.	_____ (Required)
7	Unit Pricing Rules	I acknowledge the Excel spreadsheet is attached to this bid in the Response Attachment Section. The unit price of the Excel Spreadsheet takes precedence over the total submitted in Line Items.	_____ (Required)

8	Bid Bond Submission - City	I acknowledge and understand that my bid will not be considered unless a bid bond or certified check in the sum of five percent (5%) of the total amount of the bid is made payable to the order of the City Treasurer as a guarantee of good faith prior to the bid opening. The bid security may be scanned and attached to the 'Response Attachments' section of your response or faxed to the Purchasing Office (402)441-6513. The original bond/check must then be received in the Purchasing Office, 440 S. 8th Street, Ste. 200, Lincoln, NE 68508 within three (3) days of bid closing. YOU MUST INDICATE YOUR METHOD OF BID BOND SUBMISSION IN BOX TO RIGHT! Valid Responses: Select from list below:, I have faxed my bid bond., I have scanned and attached my bid bond., I have mailed my bid bond., I have delivered my bid bond.	_____ (Required)
9	Proj. Sched.	I acknowledge that I have prepared and attached the Project Schedule to the Response Attachment section of this bid.	_____ (Required)
10	Add'l Info	I acknowledge that I have prepared and attached the additional required information in Attachment C to the Response Attachment section of this bid.	_____ (Required)
11	Contract	I acknowledge reading and understanding the Contract Agreement Forms.	_____ (Required)
12	Bonds	I acknowledge that a Performance Bond and a Payment Bond each in the amount of 100% of the Contract amount will be required with the signed contract upon award of this job.	_____ (Required)
13	Tax Exempt Forms	Materials being purchased in this bid are tax exempt and unit prices are reflected as such. A Purchasing Agent Appointment form and a Exempt Sales Certificate form shall be issued with contract documents. (Note: State Tax Law does not provide for sales tax exemption for proprietary functions for government, thereby Water projects are taxable.)	_____ (Required)
14	Project Dates	The Contractor agrees that the Work in this Contract shall begin as soon after the Notice to Proceed as is necessary for the Contractor to complete the Work within the number of calendar days allowed and prior to the stated completion date. The completion date shall be March 1, 2012.	_____ (Required)
15	Page 2 - Attributes	Please note that there is a page 2 of Attributes that you must complete as part of your bid.	_____ (Required)
16	Employee Class Act EO	I acknowledge reading and understanding the Employee Classification Act, Executive Order 83319.	_____ (Required)
17	Employee Class Act Affidavit	I acknowledge if awarded the contract I will abide by the law, notarize and attach the Employee Classification Act Affidavit to my contract.	_____ (Required)
18	Davis Bacon	I acknowledge reading and understanding the Davis Bacon documents.	_____ (Required)
19	Contact	Name of person submitting this bid:	_____ (Required)
20	Electronic Signature	Please check here for your electronic signature.	_____ (Required)

21	Agreement to Addendum No. 1	Respondent hereby certifies that the change set forth in this addendum has been incorporated in their proposal and is part of their bid. Reason: Attached Addendum No. 1.	_____ (Required)
22	Agreement to Addendum No. 2	Respondent hereby certifies that the change set forth in this addendum has been incorporated in their proposal and is part of their bid. Reason: Attached Addendum No. 2 and new itemized pricing sheet.	_____ (Required)
23	Agreement to Addendum No. 3	Respondent hereby certifies that the change set forth in this addendum has been incorporated in their proposal and is part of their bid. Reason: Attached Addendum No. 3.	_____ (Required)
24	Agreement to Addendum No. 4	Respondent hereby certifies that the change set forth in this addendum has been incorporated in their proposal and is part of their bid. Reason: Attached Addendum No. 4.	_____ (Required)

Line Items

#	Qty	UOM	Description	Response
1	1	Lump Sum	Alter Sliver Remediation for West Haymarket JPA - Lump Sum Bid	$_____

Manufacturer: Manufacturer #:

Item Notes: Fill out the itemized Excel spreadsheet attached below. Attach completed spreadsheet on the 'Response Attachments' above. Enter the total amount of bid in the Unit price box to the right. The itemized prices on the spread sheet will take precedence.

Supplier Notes: _____

Advertise 3 time
Tuesday, December 6, 2011
Tuesday, December 13, 2011
Tuesday, December 20, 2011

NOTICE TO BIDDERS
SPECIFICATION NO. 11-268

Sealed bids will be received by the Purchasing Agent of the City of Lincoln/Lancaster County, Nebraska for the West Haymarket Joint Public Agency **BY ELECTRONIC BID PROCESS** until: **12:00 p.m, Tuesday, December 27, 2011** for the following project:

ALTER SLIVER REMEDIATION
FOR THE WEST HAYMARKET JPA

Bidders must be registered on the City/County's E-Bid site in order to respond to the above Bid. To Register go to: lincoln.ne.gov (type: e-bid - in search box, then click "Supplier Registration")

Once registered, vendors will receive e-mail bid notification, first acknowledging registration, then approval of registration. Upon e-mail notification of registration approval, you may go to the E-Bid site to respond to this bid. Questions concerning this bid process may be directed to City/County Purchasing at (402) 441-8309 or 441-7410 or vmejer@lincoln.ne.gov.

Exhibit A

INSTRUCTIONS TO BIDDERS
WEST HAYMARKET JOINT PUBLIC AGENCY
E-Bid

1. BIDDING PROCEDURE

1.1 Sealed bid, formal and informal, subject to Instructions and General Conditions and any special conditions set forth herein, will be received in the office of the Purchasing Division, 440 So. 8th St., Lincoln, NE 68508, until the bid closing date and time indicated for furnishing the West Haymarket Joint Public Agency, hereinafter referred to as "JPA", the materials, supplies, equipment or services shown in the electronic bid request.

1.2 Bidders shall use the electronic bid system for submitting bids and must complete all required fields.

1.3 Identify the item you will furnish by brand or manufacturer's name and catalog numbers. Also furnish specifications and descriptive literature if not bidding the specific manufacturer or model as listed in the specifications.

1.4 Any person submitting a bid for a firm, corporation, or other organization must show evidence of his authority so to bind such firm, corporation, or organization.

1.5 Bids received after the time and date established for receiving bids will be rejected.

1.6 The Bidders and public are invited, but not required, to attend the formal opening of bids. At the opening, prices will be displayed electronically and/or read aloud to the public. The pricing is also available for immediate viewing on-line. No decisions related to an award of a contract or purchase order will be made at the opening.

1.7 If bidding on a construction contract, the City's Standard Specifications for Municipal Construction 2006 shall apply.

1.7.1 Bidders may obtain this document from the City's Design Engineering Division of the Public Works & Utilities Department for a small fee.

1.7.2 Said document can be reviewed at Design Engineering or at the office of the Purchasing Division.

1.7.3 Said document is available on the web site. http://www.lincoln.ne.gov/city/pworks/engine/dconst/standard/stndspec/index.htm

2. BID SECURITY

2.1 Bid security, as a guarantee of good faith, in the form of a certified check, cashier's check, or bid bond, may be required to be submitted with this bidding document, as indicated on the bid.

2.1.1 Bid security, if required, shall be in the amount specified on the bid. The bid security must be scanned and attached to the "Response Attachments" section of your response or it can be faxed to the Purchasing Division at 402-441-6513. The original bid security should then be sent or delivered to the office of the Purchasing Division, 440 S. 8th St., Ste. 200, Lincoln, NE 68508 within three (3) days of bid closing.

2.1.2 If bid security is not received in the office of the Purchasing Division as stated above, the vendor may be determined to be non-responsive.

2.2 If alternates are submitted, only one bid security will be required, provided the bid security is based on the amount of the highest gross bid.

2.3 Such bid security will be returned to the unsuccessful Bidders when the award of bid is made.

2.4 Bid security will be returned to the successful Bidder(s) as follows:

2.4.1 For single order bids with specified quantities: upon the delivery of all equipment or merchandise, and upon final acceptance by JPA.

2.4.2 For all other contracts: upon approval by JPA of the executed contract and bonds.

2.5 JPA shall have the right to retain the bid security of Bidders to whom an award is being considered until either:

2.5.1 A contract has been executed and bonds have been furnished.

2.5.2 The specified time has elapsed so that the bids may be withdrawn.

2.5.3 All bids have been rejected.

2.6 Bid security will be forfeited to JPA as full liquidated damages, but not as a penalty, for any of the following reasons, as pertains to this bidding document:

2.6.1 If the Bidder fails or refuses to enter into a contract on forms provided JPA, and/or if the Bidder fails to provide sufficient bonds or insurance within the time period as established in this bidding document.

3. BIDDER'S REPRESENTATION

3.1 Each Bidder by electronic signature and submitting a bid, represents that the Bidder has read and understands the bidding documents, and the bid has been made in accordance therewith.

3.2 Each Bidder for services further represents that the Bidder has examined and is familiar with the local conditions under which the work is to be done and has correlated the observations with the requirements of the bidding documents.

4. CLARIFICATION OF BIDDING DOCUMENTS

4.1 Bidders shall promptly notify the Purchasing Agent of any ambiguity, inconsistency or error which they may discover upon examination of the bidding documents.

4.2 Bidders desiring clarification or interpretation of the bidding documents for formal bids shall make a written request which must reach the Purchasing Agent at least five (5) calendar days prior to the date and time for receipt of formal bids.

4.3 Changes made to the bidding documents will be issued electronically. All vendors registered for that bid will be notified of the addendum. Subsequent Bidders will only receive the bid with the addendum included.

4.4 Oral interpretations or changes to the bidding documents made in any manner other than written form will not be binding on JPA; and Bidders shall not rely upon such interpretations or changes.

5. ADDENDA

5.1 Addenda are instruments issued by JPA prior to the date for receipt of bids which modify or interpret the bidding document by addition, deletion, clarification or correction.

5.2 Addenda notification will be made available to all registered vendors immediately via e-mail for inspection on-line.

5.3 No formal addendums will be issued later than forty-eight (48) hours prior to the date and time for receipt of formal bids, except an addendum withdrawing the invitation to bid, or an addendum which includes postponement of the bid.

6. INDEPENDENT PRICE DETERMINATION

6.1 By signing and submitting this bid, the Bidder certifies that the prices in this bid have been arrived at independently, without consultation, communication or agreement, for the purpose of restricting competition, as to any matter relating to such prices with any other Bidder or with any competitor; unless otherwise required by law, the prices which have been quoted in this bid have not been knowingly disclosed by the Bidder prior to bid opening directly or indirectly to any other Bidder or to any competitor; no attempt has been made, or will be made, by the Bidder to induce any person or firm to submit, or not to submit, a bid for the purpose of restricting competition.

7. ANTI-LOBBYING PROVISION

7.1 During the period between the bid advertisement date and the contract award, Bidders, including their agents and representatives, shall not lobby or promote their bid with the Mayor, any member of the City Council, or JPA Board and staff except in the course of JPA sponsored inquiries, briefings, interviews, or presentations, unless requested by JPA.

8. BRAND NAMES

8.1 Wherever in the specifications or bid that brand names, manufacturer, trade name, or catalog numbers are specified, it is for the purpose of establishing a grade or quality of material only; and the term "or equal" is deemed to follow.

8.2 It is the Bidder's responsibility to identify any alternate items offered in the bid, and prove to the satisfaction of JPA that said item is equal to, or better than, the product specified.

8.3 Bids for alternate items shall be stated in the appropriate space on the e-bid form, or if the proposal form does not contain blanks for alternates, Bidder MUST attach to its bid document on Company letterhead a statement identifying the manufacturer and brand name of each proposed alternate, plus a complete description of the alternate items including illustrations, performance test data and any other information necessary for an evaluation.

8.4 The Bidder must indicate any variances by item number from the bidding document no matter how slight.

8.5 If variations are not stated in the bid, it will be assumed that the item being bid fully complies with JPA's bidding documents.

9. DEMONSTRATIONS/SAMPLES

9.1 Bidders shall demonstrate the exact item(s) proposed within seven (7) calendar days from receipt of such request from JPA.

9.2 Such demonstration can be at the JPA delivery location or a surrounding community.

9.3 If items are small and malleable, the Bidder is proposing an alternate product, the Bidder shall supply a sample of the exact item. Samples will be returned at Bidder's expense after receipt by JPA of acceptable goods. The Bidder must indicate how samples are to be returned.

10. DELIVERY (Non-Construction)

10.1 Each Bidder shall state on the bid the date upon which it can make delivery of all equipment or merchandise.

10.2 JPA reserves the right to cancel orders, or any part thereof, without obligation, if delivery is not made within the time(s) specified on the bid.

10.3 All bids shall be based upon **inside** delivery of the equipment/ merchandise F.O.B. to JPA at the location specified by JPA, with all transportation charges paid.

10.4 At the time of delivery, a designated JPA employee will sign the invoice/packing slip. The signature will only indicate that the order has been received and the items actually delivered agree with the delivery invoice. This signature does not indicate all items met specifications, were received in good condition and/or that there is not possible hidden damage or shortages.

11. WARRANTIES, GUARANTEES AND MAINTENANCE

11.1 Copies of the following documents, if requested, shall accompany the bid proposal for all items being bid:
- 11.1.1 Manufacturer's warranties and/or guarantees.
- 11.1.2 Bidder's maintenance policies and associated costs.

11.2 As a minimum requirement of JPA, the Bidder will guarantee in writing that any defective components discovered within a one (1) year period after the date of acceptance shall be replaced at no expense to JPA. Replacement parts of defective components shall be shipped at no cost to JPA. Shipping costs for defective parts required to be returned to the Bidder shall be paid by the Bidder.

12. ACCEPTANCE OF MATERIAL

12.1 All components used in the manufacture or construction of materials, supplies and equipment, and all finished materials, shall be new, the latest make/model, of the best quality, and the highest grade workmanship.

12.2 Material delivered under this proposal shall remain the property of the Bidder until:
- 12.2.1 A physical inspection and actual usage of the material is made and found to be acceptable to JPA; and
- 12.2.2 Material is determined to be in full compliance with the bidding documents and accepted bid.

12.3 In the event the delivered material is found to be defective or does not conform to the bidding documents and accepted bid, JPA reserves the right to cancel the order upon written notice to the Bidder and return materials to the Bidder at Bidder's expense.

12.4 Awarded Bidder shall be required to furnish title to the material, free and clear of all liens and encumbrances, issued in the name of JPA, as required by the bidding documents or purchase orders.

12.5 Awarded Bidder's advertising decals, stickers or other signs shall not be affixed to equipment. Vehicle mud flaps shall be installed blank side out with no advertisements. Manufacturer's standard production forgings, stampings, nameplates and logos are acceptable.

13. BID EVALUATION AND AWARD

13.1 The electronic signature shall be considered an offer on the part of the Bidder. Such offer shall be deemed accepted upon issuance by JPA of purchase orders, contract award notifications, or other contract documents appropriate to the work.

13.2 No bid shall be modified or withdrawn for a period of ninety (90) calendar days after the time and date established for receiving bids, and each Bidder so agrees in submitting the bid.

13.3 In case of a discrepancy between the unit prices and their extensions, the unit prices shall govern.

13.4 The bid will be awarded to the lowest responsible, responsive Bidder whose bid will be most advantageous to JPA, and as JPA deems will best serve the requirements and interests of JPA.

13.5 JPA reserves the right to accept or reject any or all bids; to request rebids; to award bids item-by-item, with or without alternates, by groups, or "lump sum"; to waive minor irregularities in bids; such as shall best serve the requirements and interests of JPA.

13.6 In order to determine if the Bidder has the experience, qualifications, resources and necessary attributes to provide the quality workmanship, materials and management required by the plans and specifications, the Bidder may be required to complete and submit additional information as deemed necessary by JPA. Failure to provide the information requested to make this determination may be grounds for a declaration of non-responsive with respect to the Bidder.

13.7 JPA reserves the right to reject irregular bids that contain unauthorized additions, conditions, alternate bids, or irregularities that make the bid incomplete, indefinite or ambiguous.

13.8 Any governmental agency may piggyback on any contract entered into from this bid.

14. INDEMNIFICATION

14.1 The Bidder shall indemnify and hold harmless JPA from and against all losses, claims, damages, and expenses, including, attorney's fees arising out of or resulting from the performance of the contract that results in bodily injury, sickness, disease, death, or to injury to or destruction of tangible property, including the loss of use resulting therefrom and is caused in whole or in part by the Bidder, any subcontractor, any directly or indirectly employed by any of them or anyone for whose acts any of them may be liable. This section will not require the Bidder to indemnify or hold harmless JPA for any losses, claims damages, and expenses arising out of or resulting from the sole negligence of JPA.

14.2 In any and all claims against JPA or any of its members, officers or employees by an employee of the Bidder, any subcontractor, anyone directly or indirectly employed by any of them or by anyone for whose acts made by any of them may be liable, the indemnification obligation under paragraph 14.1 shall not be limited in any way by any limitation of the amount or type of damages, compensation or benefits payable by or for the Bidder or any subcontractor under workers' compensation acts, disability benefit acts or other employee benefit acts.

15. TERMS OF PAYMENT

15.1 Unless stated otherwise, JPA will begin processing payment within thirty (30) calendar days after all labor has been performed and all equipment or other merchandise has been delivered, and all such labor and equipment and other materials have met all contract specifications.

16. LAWS

16.1 The laws of the State of Nebraska shall govern the rights, obligations, and remedies of the parties under this bid and any contract reached as a result of this process.

16.2 Bidder agrees to abide by all applicable local, state and federal laws and regulations concerning the handling and disclosure of private and confidential information concerning individuals and corporations as to inventions, copyrights, patents and patent rights.

17. EQUIPMENT TAX ASSESSMENT

17.1 Any bid for public improvement shall comply with Nebraska Revised Statute Sections 77-1323 and 77-1324. Indicating; every person, partnership, limited liability company, association or corporation furnishing labor or material in the repair, alteration, improvement, erection, or construction of any public improvement shall sign a certified statement which will accompany the contract. The certified statement shall state that all equipment to be used on the project, except that acquired since the assessment date, has been assessed for taxation for the current year, giving the county where assessed.

18. AFFIRMATIVE ACTION

18.1 The City of Lincoln provides equal opportunity for all Bidders and encourages minority businesses, women's businesses and locally owned business enterprises to participate in our bidding process.

19. LIVING WAGE

19.1 The Bidders agree to pay all employees employed in the performance of this contract, a base wage of not less than the City Living Wage per section 2.81 of the Lincoln Municipal Code. This wage is subject to change every July.

20. INSURANCE

20.1 All Bidders shall take special notice of the insurance provisions required for all JPA contracts (see *Insurance Requirements for All JPA Contracts*).

21. EXECUTION OF AGREEMENT

21.1 Depending on the type of service provided, one of the following methods will be employed. The method applicable to this contract will be checked below:

____ a. **PURCHASE ORDER**, unless otherwise noted.

1. A copy of the Bidder's bid response (or referenced bid number) attached and that the same, in all particulars, becomes the contract between the parties hereto: that both parties thereby accept and agree to the terms and conditions of said bid documents.

__X__ b. **CONTRACT,** unless otherwise noted.

1. JPA will furnish copies of the Contract to the successful Bidder who shall prepare attachments as required. Insurance as evidenced by a Certificate of Insurance (as required), surety bonds properly executed (as required), and Contract signed and dated.
2. The prepared documents shall be returned to the Purchasing Office within 10 days (unless otherwise noted).
3. JPA will sign and date the Contract.
4. Upon approval and signature, the JPA will return one copy to the successful Bidder.

22. TAXES AND TAX EXEMPTION CERTIFICATE

22.1 JPA is generally exempt from any taxes imposed by the state or federal government. A Tax Exemption Certificate will be provided as applicable.

23. AUDIT ADVISORY BOARD

23.1 All parties of any JPA agreement shall be subject to audit pursuant to Chapter 4.66 of the Lincoln Municipal Code and shall make Available to a contract auditor, as defined therein, copies of all financial and performance related records and materials germane to the contract/order, as allowed by law.

24. E-VERIFY

24.1 In accordance with Neb. Rev. Stat. 4-108 through 4-114, the contractor agrees to register with and use a federal immigration verification system, to determine the work eligibility status of new employees performing services within the state of Nebraska. A federal immigration verification system means the electronic verification of the work authorization program of the Illegal Immigration Reform and Immigrant Responsibility Act of 1996, 8 U.S.C. 1324 a, otherwise known as the E-Verify Program, or an equivalent federal program designated by the United States Department of Homeland Security or other federal agency authorized to verify the work eligibility status of a newly hired employee pursuant to the Immigration Reform and Control Act of 1986. The Contractor shall not discriminate against any employee or applicant for employment to be employed in the performance of this section pursuant to the requirements of state law and 8 U.S.C.A 1324b. The contractor shall require any subcontractor to comply with the provisions of this section. For information on the E-Verify Program, go to www.uscis.gov/everify.

City of Lincoln/Lancaster County (Lincoln Purchasing)
Supplier Response

Bid Information

Bid Creator	Deb Winkler Systems Administrator
Email	dwinkler@lincoln.ne.gov
Phone	1 (402) 441-7410
Fax	1 (402) 441-6513
Bid Number	11-268 Addendum 4
Title	Alter sliver Remediation for West Haymarket JPA
Bid Type	Bid
Issue Date	12/06/2011
Close Date	12/27/2011 12:00:00 PM CST
Need by Date	

Contact Information

Address	Purchasing 440 S. 8th St. Lincoln, NE 68516
Contact	Vince Mejer Purchasing Agent
Department	Purchasing
Building	
Floor/Room	Suite 200
Telephone	1 (402) 441-8314
Fax	1 (402) 441-6513
Email	vmejer@lincoln.ne.gov

Ship to Information

Address	JPA 555 S. 10th St. Lincoln, NE 68508
Contact	
Department	
Building	
Floor/Room	
Telephone	
Fax	
Email	

Supplier Information

Company	TCW Construction Inc.
Address	141 M St. Lincoln, NE 68508
Contact	
Department	
Building	
Floor/Room	
Telephone	1 (402) 4755030
Fax	1 (402) 4755049
Email	
Submitted	12/27/2011 11:33:05 AM CST
Total	$414,937.00

Signature _____

Supplier Notes

Bid Notes

Attached Addendum No. 4.

Bid Activities

Date	Name	Description
12/14/2011 2:00:00 PM	Pre-Bid	A pre-bid conference will be held Wednesday, December 14, 2011 at 2:00 p.m. in the Purchasing Office, 440 So. 8th St., Suite 200, Lincoln, NE. All interested contractors are strongly encouraged to attend.

Bid Messages

Exhibit A

Please review the following and respond where necessary

#	Name	Note	Response
1	City = JPA	I acknowledge that wherever the City of Lincoln is referenced in this bid, it shall mean the West Haymarket Joint Public Agency (JPA).	Yes
2	NDOR Specs for Hwy Construction	I acknowledge reading and understanding the current Nebraska Department of Road's Standard Specifications for Highway Construction Supplemental Specifications to the Standard Specifications for Highway Construction, view at: http://www.dor.state.ne.us/ref-man/	Yes
3	Standard Specifications for Municipal Construction	I acknowledge reading and understanding the current City of Lincoln Standard Specifications for Municipal Construction and Lincoln Standard Plans (including General Provisions and Requirements, and Material and Construction Specifications) View at: http://www.lincoln.ne.gov/city/pworks/engine/dconst/standard/stndspec/index.htm	Yes
4	Instructions to Bidders	I acknowledge reading and understanding the Instructions to Bidders.	Yes
5	Insurance Requirements	I acknowledge reading and understanding the Insurance Requirements.	Yes
6	Specifications	I acknowledge reading and understanding the Specifications, Attachments and Figures.	Yes
7	Unit Pricing Rules	I acknowledge the Excel spreadsheet is attached to this bid in the Response Attachment Section. The unit price of the Excel Spreadsheet takes precedence over the total submitted in Line Items.	Yes
8	Bid Bond Submission - City	I acknowledge and understand that my bid will not be considered unless a bid bond or certified check in the sum of five percent (5%) of the total amount of the bid is made payable to the order of the City Treasurer as a guarantee of good faith prior to the bid opening. The bid security may be scanned and attached to the 'Response Attachments' section of your response or faxed to the Purchasing Office (402)441-6513. The original bond/check must then be received in the Purchasing Office, 440 S. 8th Street, Ste. 200, Lincoln, NE 68508 within three (3) days of bid closing. YOU MUST INDICATE YOUR METHOD OF BID BOND SUBMISSION IN BOX TO RIGHT!	I have scanned and attached my bid bond.
9	Proj. Sched.	I acknowledge that I have prepared and attached the Project Schedule to the Response Attachment section of this bid.	Yes
10	Add'l Info	I acknowledge that I have prepared and attached the additional required information in Attachment C to the Response Attachment section of this bid.	Yes
11	Contract	I acknowledge reading and understanding the Contract Agreement Forms.	Yes
12	Bonds	I acknowledge that a Performance Bond and a Payment Bond each in the amount of 100% of the Contract amount will be required with the signed contract upon award of this job.	Yes

13	Tax Exempt Forms	Materials being purchased in this bid are tax exempt and unit prices are reflected as such. A Purchasing Agent Appointment form and a Exempt Sales Certificate form shall be issued with contract documents. (Note: State Tax Law does not provide for sales tax exemption for proprietary functions for government, thereby Water projects are taxable.)	Yes
14	Project Dates	The Contractor agrees that the Work in this Contract shall begin as soon after the Notice to Proceed as is necessary for the Contractor to complete the Work within the number of calendar days allowed and prior to the stated completion date. The completion date shall be March 1, 2012.	Yes
15	Page 2 - Attributes	Please note that there is a page 2 of Attributes that you must complete as part of your bid.	Yes
16	Employee Class Act EO	I acknowledge reading and understanding the Employee Classification Act, Executive Order 83319.	Yes
17	Employee Class Act Affidavit	I acknowledge if awarded the contract I will abide by the law, notarize and attach the Employee Classification Act Affidavit to my contract.	Yes
18	Davis Bacon	I acknowledge reading and understanding the Davis Bacon documents.	Yes
19	Contact	Name of person submitting this bid:	Tony A. Ruhge
20	Electronic Signature	Please check here for your electronic signature.	Yes
21	Agreement to Addendum No. 1	Respondent hereby certifies that the change set forth in this addendum has been incorporated in their proposal and is part of their bid. Reason: Attached Addendum No. 1.	Yes
22	Agreement to Addendum No. 2	Respondent hereby certifies that the change set forth in this addendum has been incorporated in their proposal and is part of their bid. Reason: Attached Addendum No. 2 and new itemized pricing sheet.	Yes
23	Agreement to Addendum No. 3	Respondent hereby certifies that the change set forth in this addendum has been incorporated in their proposal and is part of their bid. Reason: Attached Addendum No. 3.	Yes
24	Agreement to Addendum No. 4	Respondent hereby certifies that the change set forth in this addendum has been incorporated in their proposal and is part of their bid. Reason: Attached Addendum No. 4.	Yes

Line Items

#	Qty	UOM	Description	Response
1	1	Lump Sum	Alter Sliver Remediation for West Haymarket JPA - Lump Sum Bid	$414,937.00

Item Notes: Fill out the itemized Excel spreadsheet attached below. Attach completed spreadsheet on the 'Response Attachments' above. Enter the total amount of bid in the Unit price box to the right. The itemized prices on the spread sheet will take precedence.

Supplier Notes:

Response Total: $414,937.00

11-268 Alter Sliver Remediation Ad2 TCW Construction

Line No	Standard Item No	Item Description	Quantity	Unit	Unit Price	Lumpsum
1	01.00001	Mobilization	1.0000	LS	$36,680.00	$36,680.00
2	01.01001	Const Staking	1.0000	LS	$3,050.00	$3,050.00
3	32.12001	Coir Fiber Log	1,000.0000	LF	$5.75	$5,750.00
4	32.12002	Coir Fiber Log Maint	1,000.0000	LF	$2.45	$2,450.00
5	32.03001	Construction Entrance Surfacing	100.0000	TON	$24.70	$2,470.00
6	50.00005	Temporary Shoring Zone A	600.0000	LF	$126.30	$75,780.00
7	50.00005	Temporary Shoring Zone B	600.0000	LF	$126.30	$75,780.00
8	50.00005	Chain Link Fence, 96" (In Place)	550.0000	LF	$22.00	$12,100.00
9	50.00010	Soil Excavation	3,700.0000	CY	$4.40	$16,280.00
10	50.00010	Soil Haul and Disposal PCB < 50 ppm	4,480.0000	TON	$24.40	$109,312.00
11	50.00010	Soil Replacement and Compaction	3,700.0000	CY	$19.45	$71,965.00
12	50.00015	2nd Mobilization	1.0000	LS	$1,030.00	$1,030.00
13	50.00015	Remove Fence	1.0000	LS	$2,290.00	$2,290.00

$414,937.00 Total Amount

Exhibit A

A. None

B. N/A (100% self-performed)

C. Detailed project schedule shall be available upon award. We will meet the project schedule as defined in the contract documents. Without delays due to analytical results and delays from truck delivery from Clean Harbors for the >50 ppb PCB shipments the project duration is approximately 45 – 50 calendar days.

D. Marsh USA, Inc.; Rosa Martinez; 214 303 8519

E. 1 – Superintendent; 3 – heavy equipment operators; 4 – Truck Drivers; 2 – Laborers: Note: All personnel shall be trained and have medical surveillance in accordance with 29 CFR 1910.120 EXCEPT for the truck drivers that are only to drive onto the site and not leave the cab of the truck while within the project limits.

F. Tony A. Ruhge; Project Manager; TCW Construction, Inc.; 17 yrs environmental and construction background. Prior clients include: U.S. Army Corps of Engineers; U.S. Air Force; Nebraska Army and Air National Guard; U.S. Department of Agriculture; U.S. Department of Energy/Argonne National Laboratory

G. Harvard, Nebraska PCB Transformer and Soil Remediation Project; Harvard, Nebraska; Owner: U.S. Army Corps of Engineers – Omaha District; Magnitude: Approximately $300,000.00; POC: Alan Kreisler 402-293-2540

CHAAPS Lead Remediation Project; Grand Island, Nebraska; Owner: Grand Island, Nebraska; Magnitude: Approximately $150,000.00; POC: Douglas Walker 308-385-5444

H. See Item G

I. Refer to the project record history that TCW Construction, Inc. has had with the City of Lincoln. Our reputation speaks for itself. We are currently not disbarred or restricted from bidding any project for the City of Lincoln, Nebraska.

J. The remediation and construction costs are covered as defined by the project documents and what costs TCW are to bear are inclusive of this proposal. As for contingency dollars, that term can be loosely interpreted, depending upon who you are speaking to and unless defined specifically as to what is considered contingency or contingency dollars the answer would be no.

General Decision Number: NE100002 10/29/2010 NE2

Superseded General Decision Number: NE20080002

State: Nebraska

Construction Types: Heavy and Highway

Counties: Adams, Antelope, Arthur, Banner, Blaine, Boone, Box Butte, Boyd, Brown, Buffalo, Burt, Butler, Cedar, Chase, Cherry, Cheyenne, Clay, Colfax, Cuming, Custer, Dakota, Dawes, Dawson, Deuel, Dixon, Dodge, Dundy, Fillmore, Franklin, Frontier, Furnas, Gage, Garden, Garfield, Gosper, Grant, Greeley, Hall, Hamilton, Harlan, Hayes, Hitchcock, Holt, Hooker, Howard, Jefferson, Johnson, Kearney, Keith, Keya Paha, Kimball, Knox, Lancaster, Lincoln, Logan, Loup, Madison, McPherson, Merrick, Morrill, Nance, Nemaha, Nuckolls, Otoe, Pawnee, Perkins, Phelps, Pierce, Platte, Polk, Red Willow, Richardson, Rock, Saline, Scotts Bluff, Seward, Sheridan, Sherman, Sioux, Stanton, Thayer, Thomas, Thurston, Valley, Wayne, Webster, Wheeler and York Counties in Nebraska.

HEAVY CONSTRUCTION PROJECTS (does not include water well drilling); HIGHWAY CONSTRUCTION PROJECTS (excluding tunnels, building structures in rest area projects, and railroad construction; bascule, suspension & spandrel arch bridges; bridges designed for commercial navigation; bridges involving marine construction; other major bridges).

Modification Number	Publication Date
0	03/12/2010
1	10/29/2010

SUNE1999-001 06/16/1999

	Rates	Fringes
CARPENTER	$ 13.30	
CEMENT FINISHER	$ 12.50	
ELECTRICIAN	$ 11.90	
Flagger	$ 7.60	
Form Setter	$ 10.80	
LABORER	$ 8.30	
MANHOLE BUILDER	$ 10.20	
MECHANIC	$ 12.95	
PAINTER	$ 8.35	
Pile driver lead person	$ 8.35	
Power equipment operators:		
All purpose spreader	$ 9.50	
Asphalt distributor	$ 9.65	
Asphalt paving machine (screed)	$ 10.45	

Asphalt paving machine.....$ 12.35
Asphalt roller, self-
propelled.....$ 11.20
Backhoe excavator (track
type).....$ 12.55
Bulldozer or push tractors:
115 drawbar h.p. and over..$ 12.80
Less than 115 drawbar h.p..$ 11.60
Clamshell, dragline,
crane, pile driver/shovel...$ 13.60
Concrete cure machine.....$ 9.20
Concrete finishing machine
or slip form paver.....$ 12.80
Concrete saw operator.....$ 11.20
Concrete texture machine....$ 9.20
Crusher (including those
with integral screening
plant).....$ 11.75
Dredge pump.....$ 9.50
Front end loaders:
4 cu. yds. or less.....$ 11.40
Over 4 cu. yds.....$ 12.10
Hydrohammer.....$ 9.60
Loader/backhoe (rubber-
tired).....$ 9.85
Material stockpiler.....$ 10.20
Motor grader (finisher).....$ 13.15
Motor grader (rough).....$ 10.90
Power broom operator.....$ 9.15
Power grader machine
(trimmer & profiler).....$ 12.80
Roller or compactor,
earthwork, self-
propelled.....$ 10.05
Scraper.....$ 12.40
Skid steer loader.....$ 9.50
Stationary plant (asphalt
or concrete).....$ 12.75
Stationary plant (base or
stabili- zation).....$ 11.75
Tractor (farm type).....$ 9.50
Traveling plant
stabilization.....$ 11.60
Trenching machine.....$ 9.85
Water tankers:
6000 gallons and over.....$ 11.20
Under 6000 gallons.....$ 9.65

Truck drivers:
Semi-trailer or lowboy.....$ 10.85
Single axle.....$ 8.40
Tandem axle.....$ 9.65
Transit mix.....$ 9.65

WELDER.....$ 12.25

WELDERS - Receive rate prescribed for craft performing
operation to which welding is incidental.
==========

Unlisted classifications needed for work not included within
the scope of the classifications listed may be added after
award only as provided in the labor standards contract clauses

Exhibit A

(29CFR 5.5 (a) (1) (ii)).

In the listing above, the "SU" designation means that rates listed under the identifier do not reflect collectively bargained wage and fringe benefit rates. Other designations indicate unions whose rates have been determined to be prevailing.

WAGE DETERMINATION APPEALS PROCESS

1.) Has there been an initial decision in the matter? This can be:

* an existing published wage determination
* a survey underlying a wage determination
* a Wage and Hour Division letter setting forth a position on a wage determination matter
* a conformance (additional classification and rate) ruling

On survey related matters, initial contact, including requests for summaries of surveys, should be with the Wage and Hour Regional Office for the area in which the survey was conducted because those Regional Offices have responsibility for the Davis-Bacon survey program. If the response from this initial contact is not satisfactory, then the process described in 2.) and 3.) should be followed.

With regard to any other matter not yet ripe for the formal process described here, initial contact should be with the Branch of Construction Wage Determinations. Write to:

Branch of Construction Wage Determinations
Wage and Hour Division
U.S. Department of Labor
200 Constitution Avenue, N.W.
Washington, DC 20210

2.) If the answer to the question in 1.) is yes, then an interested party (those affected by the action) can request review and reconsideration from the Wage and Hour Administrator (See 29 CFR Part 1.8 and 29 CFR Part 7). Write to:

Wage and Hour Administrator
U.S. Department of Labor
200 Constitution Avenue, N.W.
Washington, DC 20210

The request should be accompanied by a full statement of the interested party's position and by any information (wage payment data, project description, area practice material, etc.) that the requestor considers relevant to the issue.

3.) If the decision of the Administrator is not favorable, an interested party may appeal directly to the Administrative Review Board (formerly the Wage Appeals Board). Write to:

Administrative Review Board
U.S. Department of Labor
200 Constitution Avenue, N.W.
Washington, DC 20210

Exhibit A

4.) All decisions by the Administrative Review Board are final.

==========

END OF GENERAL DECISION

Exhibit A

SPECIAL PROVISIONS
TO THE
CITY OF LINCOLN
STANDARD SPECIFICATIONS

PCB-CONTAMINATED SOIL REMOVAL
WEST HAYMARKET REMEDIATION
BNSF TRANSFER PROPERTY

Joint Public Agency Project No. 11-268

The work as detailed on the plans shall be completed in accordance with the requirements of the 2011 City of Lincoln Standard Specifications for Municipal Construction and the City of Lincoln Standard Plans 2010. The 2011 City of Lincoln Standard Specifications for Municipal Construction, the Special Provisions, Lincoln Standard Plans 2010 and all supplementary documents are essential parts of the contract.

In case of a discrepancy:

1. Special Provisions shall govern over the City of Lincoln Standard Specifications for Municipal Construction.
2. The Special Provisions shall govern over the Plans.

The CONTRACTOR shall not take advantage of any apparent error or omission in the plans or specifications. Upon discovery of such an error or omission, the CONTRACTOR shall notify the Engineer immediately. The Engineer will then make such corrections or interpretations as necessary to fulfill the intent of the plans and specifications.

Materials or work described in words which, so applied, have known technical or trade meaning shall be held to refer to such recognized standards.

Figured dimensions on the plans shall be taken as correct but shall be checked by the CONTRACTOR before starting construction. Any errors, omissions, or discrepancies shall be brought to the attention of the Engineer and the Engineer's decision thereon shall be final. Correction of errors or omissions on the drawings or specifications may be made by the Engineer when such correction is necessary for the proper execution of the work.

BACKGROUND INFORMATION

As part of the West Haymarket Redevelopment project in Lincoln, Nebraska; The City of Lincoln/Joint Public Agency (JPA) is coordinating with Alter Trading Corporation (Alter) to prepare a parcel of land situated along the western margin of the Alter property for transfer. The parcel requires cleanup to accommodate future operations within the Right of the Way for the BNSF Railway Company (BNSF). The project location and site map are represented as Figure 1 and 2 respectively. The property to be transferred is referred to as the "BNSF Transfer Property" or "site" and is illustrated on Figure 2.

Soil analysis has confirmed concentrations of polychlorinated biphenyls (PCBs) on the BNSF Transfer Property ranging from not detected to 8,440 parts per million (ppm). Cleanup shall meet the standard of 40 CFR §761.61(a)(4)(*i*)(A)*High occupancy areas*. In addition to PCB characterization, laboratory analysis has been performed on selected samples for chemicals of potential concern (COPC) at the site including RCRA metals, volatile organic compounds (VOCs), and semi-volatile organic compounds (SVOCs) (refer to Attachment A).

PCB-contaminated soils will be removed to an average depth of approximately four feet below ground surface (bgs) and replaced with controlled fill across the BNSF Transfer Property. The JPA has properly characterized the soils destined for removal in accordance with a sampling plan approved by the United States Environmental Protection Agency. Cleanup verification sampling will be conducted after all excavation is completed to document that the cleanup standard has been achieved.

CONTRACT TIME

It is anticipated that notice to proceed for this project will be given on **January 9, 2012.** Substantial completion of the project shall include completion of soil excavation, disposal, soil backfilling and compaction, removal of all storm water and erosion control materials and installation of fencing. Final completion for this contract shall be on or before **March 1, 2012**.

Time is of the essence in the completion of the work and the CONTRACTOR should sequence and execute the work to minimize delays.

SCHEDULE

Because timing is of the essence, the prospective CONTRACTOR is required to submit his project schedule at the time of bid submittal. The project schedule may factor into the award decision.

GENERAL CONDITIONS AND REQUIREMENTS

Article II. Section G (CONSTRUCTION PERFORMANCE AND CONSTRUCTION PAYMENT BONDS)

The City of Lincoln General Provisions and Requirements have been amended as follows:

Within **five (5) days** after the acceptance of the bid, the CONTRACTOR shall furnish, on a form acceptable by the City, a construction performance and construction payment bond, in a sum not less than the Contract Sum, executed by the CONTRACTOR and a corporate surety company authorized to transact business in the State of Nebraska. Such Bond shall be conditioned upon the faithful performance of all the terms and conditions of the Contract Documents, including the holding harmless of the Joint Public Agency (JPA or "OWNER") from failure to do so, and including the making good of any and all guarantees that the Contract Documents may require. The Bond shall be further conditioned upon the payment of all laborers and material suppliers used in the performance of the Contract, including Insurance premiums and interest.

Article II. Section H (FAILURE TO EXECUTE THE CONTRACT)

The City of Lincoln General Provisions and Requirements have been amended as follows:

It is agreed by the Bidder that upon a failure to enter into the Contract and furnish the necessary Construction Performance and Construction Payment Bond, within **five (5) calendar days**, the amount of the Bidder's security may, at the discretion of the JPA, become the property of the JPA and will be retained, as damages to the JPA. The award of the Contract may then, at the discretion of the JPA, be made to the next lowest responsible bidder, or the Work may be rebid, or may be constructed by the JPA in any legal manner.

Article V, Section E (PROJECT COORDINATION)

Add the following to City of Lincoln General Provisions and Requirements:

The CONTRACTOR is responsible for contacting the BNSF, local utility providers and the local utility locating service to identify overhead and buried utilities at the project site. The CONTRACTOR is responsible for protecting/temporarily relocating the utilities located within the excavation area, if needed, to facilitate the excavation process. The CONTRACTOR shall repair any marked utilities damaged as a result of excavating. The CONTRACTOR shall observe all overhead utility lines and cables, taking care not to damage these utilities as a result of Work performed.

To arrange for utilities to locate and flag their underground facilities, contact The Diggers Hotline of Nebraska at 1-800-331-5666 and the BNSF (ATTN: Gerald Maczuga) at 402-458-7537 prior to starting work.

Utilities known in the project area:
The following information is current as of December 2, 2011:
One (1) 10 in. diameter sanitary sewer line and connecting manhole is located within the excavation area and a BNSF signal structure is located at the southwest corner of the project area (depicted on Figure 2). According to the City of Lincoln Public Works Department's records, the depth of the sewer line is in the range of 12 feet below ground surface. Prior to the site excavation, the excavation CONTRACTOR will coordinate with the City of Lincoln Public Works to assure adequate protection of the sewer pipe riser.

Article V, Section J. (COORDINATION WITH OTHERS)

Add the following to City of Lincoln General Provisions and Requirements:

The CONTRACTOR is required to closely coordinate all of their work on this project with Alter Trading (ATTN: Steve Mulinix 402-476-3306) and the BNSF (ATTN: (ATTN: Gerald Maczuga) at 402-458-7537. The CONTRACTOR shall communicate directly with the Alter Trading Company and BNSF on an on-going basis when scheduling and performing the environmental remediation work to be completed under this project.
All work on this project is being completed adjacent to BNSF property and as such the CONTRACTOR shall abide by all rules and requirements of the railroad. The CONTRACTOR shall conduct their operations so as not to impact the railroad operations.

Article VI, Section G (COMPLIANCE WITH LAWS)

Add the following to City of Lincoln General Provisions and Requirements:

Health and Safety

The CONTRACTOR shall implement and manage a site specific Health and Safety Plan (HSP) in compliance with all requirements of the Occupational Safety and Health Administration (OSHA) 29 CFR 1910.120/121 for activities at hazardous waste sites. The CONTRACTOR's HSP shall be submitted to the OWNER before any work at the site can be initiated, but not for review or approval.

- All CONTRACTOR Personnel working on site shall have received safety training commensurate with the duties they are responsible for performing in accordance with 29 CFR 1910.120/121.

- The CONTRACTOR's HSP shall require the presence of a qualified, full-time Site Safety Officer (SSO). The SSO shall be responsible for implementing and monitoring the requirements and procedures contained in the HSP. The SSO shall not have other project related responsibilities that may compromise the SSO's ability to be objective in carrying out the HSP.

Article VI, Section M. (PERMITS AND LICENSES)

Add the following to City of Lincoln General Provisions and Requirements:

The OWNER has or will arrange for provision of the following permits:

1) NPDES General Storm Water Construction Discharge Permit
2) Flood Plain Permit

The CONTRACTOR shall be responsible for complying with the requirements of all permits including those acquired by the OWNER.

In addition to permits acquired by OWNER, the CONTRACTOR shall acquire all other permits required by Laws or Regulations, including, without limitation, the following specific permits (if applicable):

1) Certificates and permits are required for uses such as, but not limited to:
a) Fuel burning equipment
b) Gasoline and petroleum distillate storage containers
c) Land disturbing activities
d) Odors
2) All associated building demolition permits
3) City, State, and County Transportation Encroachment permits

4) Permit-Required Confined Space - The workplace in which the WORK is to be performed may contain permit-required confined spaces (permit spaces) as defined 29 CFR 1910.146 and, if so, permit space entry is allowed only through compliance with a confined space entry program meeting the requirements of 29 CFR 1910.146. CONTRACTOR shall submit a confined space entry program or submit in writing that compliance with the City of Lincoln's program will be made.

5) Dewatering Permits as required by NDEQ and the Lower Platte South Natural Resources District.

6) Fugitive Dust Control Permit

A "Notice of Intent" for coverage under the NDEQ Construction Storm Water General Permit will be submitted to the City of Lincoln and NDEQ. Coverage under this permit will be approved prior to the anticipated Notice to Proceed. No ground disturbance can occur until authorization for coverage under the permit is received.

Storm Water Pollution Prevention Plan (SWPPP)

The CONTRACTOR shall understand the terms and conditions of the general NPDES permit that authorizes the storm water discharges associated with construction at the site. Additionally, the CONTRACTOR, as evidenced by their signature on this proposal, agrees and understands that, if awarded the contract on this project, he/she:

1. Shall read and understand the Storm Water Pollution Prevention Plan (SWPPP) that is developed for this project. The CONTRACTOR must sign a certification form located in the SWPPP, to certify that they will follow the requirements of the NPDES permit;

2. Is legally bound to comply with the Clean Water Act to ensure compliance with the terms and conditions of the SWPPP as developed under the NPDES permit and the terms of the NPDES permit; and will hold OWNER harmless for damages and fines arising as a result of noncompliance with the terms of the storm water permits and authorizations associated with the work on this project;

4. Shall be responsible for the maintenance of sediment control materials and other measures specified in the SWPPP; Coir fiber logs shall be installed surrounding the excavation area prior to conducting any excavation Work. The CONTRACTOR shall install coir fiber log barriers, a construction entrance and comply with other best management practices (BMPs) as described in the CSW-NOI and SWPPP. The CONTRACTOR shall conform to material specifications, placement, proper installation methods, and inspection and maintenance details provided in the CSW-NOI, SWPPP, City of Lincoln Standard Specifications (2011) and City of Lincoln Standard Plans (2010). The final location of coir fiber logs and construction entrance shall be determined in the field. For bidding purposes, the amount of coir fiber logs needed is estimated to be 1,000 feet and the size of the construction entrance is estimated to be 24' by 70'. The final location and configuration to be determined in the field and approved by OWNER.

5. Shall complete permanent or temporary stabilization within seven (7) calendar days of soil disturbance to the surface of all perimeter controls, soil and debris stockpiles, and any other disturbed or graded areas on the project site which are not being used for material storage, or on which actual earth moving activities are not being performed; and

6. Shall complete the approved inspection forms and inspect/maintain all sediment or erosion control materials required under this contract at least once every seven (7) calendar days and after any storm event of greater than 0.5 inches of precipitation, on the site, during any 24-hour period; any necessary repairs or cleanup to maintain the effectiveness of the best management practices shall be made by CONTRACTOR immediately.

Payment:
Measurement and payment will be based on the unit rate bid prices for "Coir Fiber Log", "Coir Fiber Log Maint" and "Construction Entrance Surfacing".

-----End of Revisions/Additions to General Conditions and Requirements Section -----

SPECIAL PROVISIONS TO - EARTHWORK - (CHAPTER 2)

Subgrade portion of existing fence to be detached and disposed at licensed Subtitle D landfill.

2.05 EXCAVATION (Section A)
Add the following to City of Lincoln General Provisions and Requirements:

Estimate of Quantities
The depth of the excavation across the site will be 4 feet below ground surface. Two locations, identified as "hot spots" within the area of excavation shall be excavated as noted on Figure 2).

Quantity of Contaminated Soil PCB > 50ppm	500 cubic yards or 700 tons (in place)
Quantity of Contaminated Soil PCB < 50ppm	3,200 cubic yards or 4,480 tons (in place)

All of the soil quantities are estimated and the actual volume could be more or less depending on site conditions.

Temporary Shoring
It shall be the responsibility of the CONTRACTOR to coordinate with the BNSF to determine if temporary shoring is required to perform the excavation activities and to comply with all BNSF shoring requirements if necessary. All temporary shoring that is adjacent to the railroad tracks shall be designed in accordance with the requirements outlined in the Railway Guidelines.

Payment:
Based on linear feet of shoring installed.

Construction Staking/Survey
Prior to excavation, CONTRACTOR shall complete construction staking of the limits of excavation based on coordinates provided by the OWNER and field verified by CONTRACTOR by survey.

CONTRACTOR is responsible for post-excavation survey for verification of soil removal volumes. This post excavation survey will be the basis for measurement and payment of soil excavated and replaced/compacted.
CONTRACTOR shall provide survey for installation of fence.

Payment:
Payment for construction staking and survey will be paid on a lump sum price bid "Construction Staking/Survey".

Excavation Sequence
CONTRACTOR shall develop an Excavation Sequencing Plan for approval by OWNER. The Plan must address demolition and excavation operations and demonstrate how CONTRACTOR will prevent any PCB- contaminated soil or other media from coming into contact with uncontaminated areas.

Areas within the property but outside of the limits of excavation shall be protected by the CONTRACTOR such that contaminated material does not come into contact with these areas.

Equipment Decontamination
As this site includes the removal/transport of PCB-contaminated soil, tracking of materials from the site (including on-site unaffected or remediated areas) or allowing PCB-contaminated soil or materials to remain on excavation equipment, trucks etc. is not allowed.

Payment
Include in soil excavation unit cost.

Additional Excavation
Additional excavation at the site may be required, however the need for this will not be known until 2 weeks after completion of the initial excavation activities. If additional excavation is necessary, CONTRACTOR will be required to mobilize back to the site within 2 working days of notice.

Payment
CONTRACTOR shall provide costs for this event as 2nd Mobilization as a Lump Sum. Excavation, haul and disposal will be paid on a unit basis.

PCB-Contaminated Soil Disposal
Excavated PCB-Contaminated soil should be placed directly into dump trucks. Stockpiling is only allowed per approval of the OWNER. If any PCB-contaminated material is dumped, spilled, or otherwise released in unauthorized areas, the CONTRACTOR shall remove the material and restore the area to the condition of the surrounding undisturbed area. If necessary, contaminated ground shall be excavated, disposed of and replaced with suitable fill material, and compacted at the CONTRACTOR's expense. If concrete or other debris are encountered this material shall be excavated, hauled and disposed in the same manner as the soils in the area in which it is found.

PCB-Contaminated Soil > 50ppm

Owner has made arrangements for hauling and disposal of PCB-Contaminated Soil > 50ppm with Clean Harbors. OWNER will pay for hauling and disposal. Contractor is responsible for excavation and loading of this material. Contractor shall closely coordinate excavation activities with Clean Harbors to assure efficient conduct of the excavation and loading activities.

Payment:

Payment for excavation and loading will be on a "cubic yard" basis.

PCB-Contaminated Soil < 50ppm

The CONTRACTOR shall arrange for disposal and transport of PCB-Contaminated Soil < 50ppm at a Subtitle D landfill. The CONTRACTOR shall identify the facility and provide documentation of Local and State permits/authorizations for the facility demonstrating its ability to accept PCB-Contaminated soil and other materials.

Payment:

Payment for excavation and loading will be on a "cubic yard" basis. Payment for hauling and disposal will be on a "per ton basis" of PCB-Contaminated Soil < 50ppm as established by landfill dump tickets. A copy of each dump ticket issued by the disposal facility shall be provided to the OWNER.

Hauling

An adequate number of trucks shall be used to efficiently conduct the Work. Trucks must be capable of transporting PCB-contaminated soils from the excavation to the landfill for disposal without release of soil to the ground. Truck loads must be covered with tarps. Dust control will be provided by the CONTRACTOR to ensure compliance with NDEQ and Lincoln/Lancaster County Health Department Air Quality regulations pertaining to fugitive emissions from hauling operations.

The CONTRACTOR is responsible for insuring that all vehicles leaving the site are clean of dirt and debris. In all cases where any materials are spilled or dripped from the vehicles, the CONTRACTOR shall clean up the same to keep the streets and pavements free from dirt, mud, sand, stone, or other hauled material.

Construction Fencing

The CONTRACTOR shall provide barricades and fencing so that the public and personnel not directly involved with the Work are free of hazards. The CONTRACTOR shall install temporary construction fencing and barricades around the open excavation while not performing Work. CONTRACTOR shall maintain fencing in good condition. Inspect fencing daily during construction. In addition, if the OWNER identifies maintenance needs the CONTRACTOR must repair damaged fencing immediately. CONTRACTOR shall remove fencing upon completion of the excavation and compaction work.

Payment:

Installation, maintenance and removal shall be included in the Mobilization Costs.

2.08 EMBANKMENT (Section A)

Add the following to City of Lincoln General Provisions and Requirements:

No backfill can be placed until the cleanup standard for the site has been confirmed by OWNER. Backfill should be placed as soon as possible following authorization by OWNER.

The excavation will be backfilled with the clean soil imported from off site that will meet specifications described below. No wet soil may be used as backfill. Backfill will be free of debris including roots, sod, leaves, and construction debris.

The CONTRACTOR shall identify the location of the quarry, pit, or borrow site(s) in which backfill materials are procured to OWNER. The CONTRACTOR shall provide a contact name and address for the operator of the quarry, pit, or borrow site(s) in advance of procuring backfill. The CONTRACTOR shall allow OWNER to collect samples for the purpose of laboratory testing to determine the suitability of the backfill for use at the site.

The City of Lincoln General Provisions and Requirements have been amended as follows

<u>Delete paragraph 5 of this section and insert the following:</u>

The basis for controlling the placement of backfill on the site, excluding free draining granular materials, shall be the "optimum moisture content" and "maximum dry density" as determined by ASTM D690-00a, Procedure A, Standard Test Methods for Laboratory Compaction Characteristics of Soil Using Standard Effort (12,400 ft-lb_f/ft^3 or 600 kN-m/m^3).

Silty and clayey sands (as defined by ASTM D2487-10, Standard Test Method for Classification of Soils for Engineering Purposes) shall be placed at a workable moisture content (near the soil's optimum moisture content) and compacted to a dry density at least equal to 95% of the soil's maximum dry density.

Clean free draining granular materials (sand) used as backfill shall be compacted to at least 60% "relative density" as determined in accordance with ASTM D4253-00 (Standard Test Methods for Maximum Index Density and Unit Weight of Soils Using a Vibratory Table) and D4254-00 (Standard Test Methods for Minimum Index Density and Unit Weight of Soils and Calculations of Relative Density).

Payment:

Measurement and payment for the volume of soil backfilled will be based on pre-excavation staking/survey and post excavation survey of the final excavation dimensions be completed by CONTRACTOR and will be paid on a unit rate price bid "Soil Replacement and Compaction".

SPECIAL PROVISIONS TO TRAFFIC CONTROL (CHAPTER 15.0)

15.02 Traffic Control Plan

Add the following to City of Lincoln General Provisions and Requirements:

Access to the site is from the north along "N" Street to the Alter Trading Company access as highlighted on Figure 2. The CONTRACTOR shall coordinate with Alter Trading Company, the BNSF, and the selected landfill where PCB-contaminated soils will be hauled in preparation of the Traffic Control Plan.

Payment:
Payment for preparation and implementation of the Traffic Control Plan is included in the Mobilization Costs.

-----End of Revisions/Additions to Special Provisions Section -----

Remove Fence

The CONTRACTOR shall remove the existing fences including all foundations at the locations noted on the plans or as directed by the OWNER. The CONTRACTOR shall contact Alter Trading Company prior to removal of the fence to determine if the Alter Trading Company would like to retain the salvaged fence. If the Alter Trading Company does not want the salvaged fence material then the Contractor shall properly dispose of the fence off site. The CONTRACTOR shall exercise care in the removal of all fence material that is to be salvaged so as not to damage the fence.

The CONTRACTOR shall backfill the area where the foundation or concrete base for the fence posts are removed to match the existing grade elevations or the subgrade elevation for the proposed surfacing or the finished ground elevations at turf areas. Foundations or concrete bases for the fencing to be removed shall be completely removed and disposed of at the Subtitle D landfill selected for disposal of the PCB-Contaminated Soil < 50ppm.

Measurement and payment for removal of existing fences shall not be differentiated by size or type and shall be paid for at the contract unit price bid per each for the pay item "Remove Fence". Said payment shall be full compensation for furnishing all labor, equipment, and material required for removal, disposal, backfill and compaction, and all other incidental items required to remove and dispose of the existing fence or to salvage the removed fence in the event the adjacent property owner would like to retain the material.

BNSF RAILWAY SPECIAL PROVISIONS

The following Exhibit "C" provides the Contractor Requirements for work that will be completed on existing BNSF Railway property as part of this project. The Contractor shall be required to strictly adhere to all requirements as outlined and shall coordinate their work with the BNSF's Project Engineer, Gerald Maczuga or other designated representative at all times during completion of work on railroad property.

In addition the Contractor will be required to execute the attached agreement Exhibit C-1A and provide certification of the required insurance coverages outlined in the agreement to the BNSF Railway prior to start of any work on railroad property.

Flagging will be required when work is required on BNSF property within 25 feet of the existing tracks and when the Contractor is using any of the temporary construction accesses across the BNSF tracks. Flagging services shall be performed by BNSF employees as outlined in the following Contractor's Requirements for work on BNSF Railway property. The cost of the flagging up to a maximum amount of $150,000 shall be borne by the JPA. The $150,000 amount of flagging is based upon 150 flagging days using a standard 10-hour work day and the BNSF requiring a single flagger for this work. If the BNSF requires additional flaggers than the maximum amount is subject to change as determined by the Engineer. All flagging costs in excess of the $150,000 amount shall be deducted from the retainage held on the project prior to final payment.

EXHIBIT C
Contractor Requirements

1.01 General

- **1.01.01** The Contractor must cooperate with **BNSF RAILWAY COMPANY**, hereinafter referred to as "Railway" during the performance of the C&M Work (as defined in Exhibit C-1) and any other work over, under, on or adjacent to Railway Property.

- **1.01.02** The Contractor must execute and deliver to the Railway duplicate copies of the Exhibit C-1 Contractor Right of Entry for C&M Work, in the form attached hereto, obligating the Contractor to provide and maintain in full force and effect the insurance called for under Section 3 of said Exhibit C-1. Questions regarding procurement of the Railroad Protective Liability Insurance should be directed to Rosa Martinez at Marsh, USA, 214-303-8519.

- **1.01.03** The Contractor must plan, schedule and conduct all C&M Work activities so as not to interfere with the movement of any trains on Railway Property.

- **1.01.04** The Contractor's right to enter Railway Property is subject to the absolute right of Railway to cause the Contractor's work on Railway Property to cease if, in the opinion of Railway, Contractor's activities create a hazard to Railway Property, employees, and/or operations. Railway will have the right to stop construction work on the C&M Work if any of the following events take place: (i) Contractor (or any of its subcontractors) performs the C&M Work in a manner contrary to the plans and specifications approved by Railway; (ii) Contractor (or any of its subcontractors), in Railway's opinion, prosecutes the C&M Work in a manner which is hazardous to Railway Property, facilities or the safe and expeditious movement of railroad traffic; or (iii) the insurance described in the attached Exhibit C-1 is canceled during the course of the C&M Work. The work stoppage will continue until all necessary actions are taken by Contractor or its subcontractor to rectify the situation to the satisfaction of Railway's Division Engineer or until additional insurance has been delivered to and accepted by Railway. Any such work stoppage under this provision will not give rise to any liability on the part of Railway. Railway's right to stop the C&M Work is in addition to any other rights Railway may have including, but not limited to, actions or suits for damages or lost profits. In the event that Railway desires to stop the C&M Work, Railway agrees to immediately notify the following individual in writing:

  Roger Figard, City Engineer
  Department of Public Works and Utilities
  City of Lincoln, Nebraska
  555 South 10th Street
  Lincoln, NE 68508

- **1.01.05** Contractor shall, and shall cause all Contractor parties to, strictly comply with all federal, state and local environmental laws and regulations in its use of Railway's Property, including, but not limited to, the Resource Conservation and Recovery Act, as amended (RCRA), the Clean Water Act, the Oil Pollution Act, the Hazardous Materials Transportation Act, CERCLA (collectively, the "**Environmental Laws**") with respect to Railway's Property. Contractor shall not maintain a "treatment," "storage," "transfer" or "disposal" facility, or "underground storage tank," as those terms are defined by Environmental Laws, on Railway's Property. Contractor shall not handle, transport, release or suffer the release of "hazardous

waste" or "hazardous substances", as "hazardous waste" and "hazardous substances" may now or in the future be defined by any Environmental Laws, except as may be pre-existing in Railway Property and as encountered in the C&M Work and then only in compliance with Environmental Laws, and shall not use any soils or other materials containing hazardous waste or hazardous substances in connection with the C&M Work, or otherwise bring any hazardous waste or hazardous substances onto any Railway Property.

Contractor shall give Railway immediate notice to Railway's Resource Operations Center at (800) 832-5452 in the event of any release of hazardous substances on or from Railway Property, violation of Environmental Laws, or inspection or inquiry by governmental authorities charged with enforcing Environmental Laws with respect to Contractor's use of Railway Property. Contractor shall use best efforts to promptly respond to any release arising from or related to its activities contemplated in the C&M Work. Contractor shall also give Railway notice of all measures undertaken on Contractor's behalf to investigate, remediate, respond to or otherwise cure such release or violation.

In the event Contractor has notice of a release or violation of Environmental Laws which occurred or may occur as a result of Contractor's activities contemplated in the C&M Work, Contractor shall take timely measures to investigate, remediate, respond to or otherwise cure as required by applicable law such release or violation affecting Railway Property or improvements. If during the C&M Work, soils or other materials considered to be environmentally contaminated are exposed, Contractor will remove and safely dispose of said contaminated soils. Determination of soils contamination and applicable disposal procedures thereof will be made only by an agency having the capacity and authority to make such a determination.

Contractor agrees to periodically to furnish Railway upon written request with reasonable proof that it is in compliance with this **Section 1.01.05**.

- **1.01.06** All C&M Work must performed (i) in a good and workmanlike manner, (ii) in accordance with plans and specifications approved in advance by Railway (the "**Approved Plans**"), (iii) in conformance with applicable building codes and all applicable engineering, safety and any and all laws, statutes, regulations, ordinances, orders, covenants, restrictions, or decisions of any court of competent jurisdiction ("**Legal Requirements**"), (iv) in accordance with the accepted industry standards of care, skill and diligence, and (v) in such a manner as shall not adversely affect the structural integrity or maintenance of any Railway improvements or other improvements on or near Railway Property, or any lateral support of any structures adjacent to or in the proximity of any Railway improvements or Railway Property. In addition, the C&M Work must be promptly commenced by the Contractor and thereafter diligently prosecuted to conclusion in its logical order and sequence. Furthermore, any changes or modifications of the C&M Work which affect Railway will be subject to Railway's written approval prior to the commencement of any such changes or modifications from the Railway's Project Engineer.

- **1.01.07** Contractor shall be responsible for all job site cleanup and restoration, including removal of all construction materials, concrete debris, surplus soil, refuse, contaminated soils, asphalt debris, litter and other waste materials resulting from the C&M Work to the reasonable satisfaction of Railway's Division Engineer.

- **1.01.08** The Contractor must notify the City at City's City Engineer, telephone number (402) 441-7567 and Railway's Project Engineer, telephone number (402) 458-7537 at least ten (10) calendar days before commencing any C&M Work on Railway Property.

- **1.01.09** For any bridge demolition and/or falsework above any tracks or any excavations located with any part of the excavations located within, whichever is greater, twenty-five (25) feet of the nearest track or

intersecting a slope from the plane of the top of rail on a 2 horizontal to 1 vertical slope beginning at eleven (11) feet from centerline of the nearest track, both measured perpendicular to center line of track, the Contractor must furnish the Railway five sets of working drawings showing details of construction affecting Railway Property and tracks. The working drawing must include the proposed method of installation and removal of falsework, shoring or cribbing, not included in the contract plans and two sets of structural calculations of any falsework, shoring or cribbing. For all excavation and shoring submittal plans, the current "BNSF-UPRR Guidelines for Temporary Shoring" must be used for determining the design loading conditions to be used in shoring design, and all calculations and submittals must be in accordance with the current "BNSF-UPRR Guidelines for Temporary Shoring". All submittal drawings and calculations must be stamped by a registered professional engineer licensed to practice in the state the project is located. All calculations must take into consideration railway surcharge loading and must be designed to meet American Railway Engineering and Maintenance-of-Way Association (previously known as American Railway Engineering Association) Coopers E-80 live loading standard. All drawings and calculations must be stamped by a registered professional engineer licensed to practice in the state the project is located. The Contractor must not begin C&M Work until notified by the Railway that plans have been approved, which approved plans shall become part of the Approved Plans. The Contractor will be required to use lifting devices such as, cranes and/or winches to place or to remove any falsework over Railway's tracks. In no case will the Contractor be relieved of responsibility for results obtained by the implementation of the Approved Plans.

- **1.01.10** Subject to the movement of Railway's trains, Railway will cooperate with the Contractor such that the C&M Work may be handled and performed in an efficient manner. The Contractor will have no claim whatsoever for any type of damages or for extra or additional compensation in the event his work is delayed by the Railway.

1.02 Contractor Safety Orientation

- **1.02.01 No employee of the Contractor, its subcontractors, agents or invitees may enter Railway Property without first having completed Railway's Engineering Contractor Safety Orientation, found on the web site www.contractororientation.com. The Contractor must ensure that each of its employees, subcontractors, agents or invitees completes Railway's Engineering Contractor Safety Orientation through internet sessions before any C&M Work is performed. Additionally, the Contractor must ensure that each and every one of its employees, subcontractors, agents or invitees possesses a card certifying completion of the Railway's Engineering Contractor Safety Orientation before entering Railway Property. The Contractor is responsible for the cost of the Railway's Engineering Contractor Safety Orientation. The Contractor must renew the Railway's Engineering Contractor Safety Orientation annually. Further clarification can be found on the web site or from the Railway's Project Engineer.**

1.03 Railway Requirements

- **1.03.01** The Contractor must take protective measures as are necessary to keep railway facilities, including track ballast, free of sand, debris, and other foreign objects and materials resulting from his operations. Any damage to railway facilities resulting from Contractor's operations will be repaired or replaced by Railway and the cost of such repairs or replacement must be paid for by the Contractor.

- **1.03.02** The Contractor must notify Railway's Project Engineer, telephone number (402) 458-7537, and provide blasting plans to the Railway for review seven (7) calendar days prior to conducting any blasting operations adjacent to or on Railway Property.

- **1.03.03** The Contractor must abide by the following temporary clearances during construction:

  - 15' Horizontally from centerline of nearest track
  - 21'-6" Vertically above top of rail
  - 27'-0" Vertically above top of rail for electric wires carrying less than 750 volts
  - 28'-0" Vertically above top of rail for electric wires carrying 750 volts to 15,000 volts
  - 30'-0" Vertically above top of rail for electric wires carrying 15,000 volts to 20,000 volts
  - 34'-0" Vertically above top of rail for electric wires carrying more than 20,000 volts

- **1.03.04** Upon completion of construction, the following clearances shall be maintained:

  - 25' Horizontally from centerline of nearest existing or future track to the face of the pier or abutment structure
  - 31' Vertically above top of rail to the bottom of the Pedestrian Bridge

- **1.03.05** Any infringement within State statutory clearances due to the Contractor's operations must be submitted to the Railway and to the City and must not be undertaken until approved in writing by the Railway, and until the City has obtained any necessary authorization from the State Regulatory Authority for the infringement. No extra compensation will be allowed in the event the Contractor's C&M Work is delayed pending Railway approval, and/or the State Regulatory Authority's approval.

- **1.03.06** In the case of impaired vertical clearance above top of rail, Railway will have the option of installing tell-tales or other protective devices Railway deems necessary for protection of Railway operations. The cost of tell-tales or protective devices will be borne by the Contractor.

- **1.03.07** The details of construction affecting the Railway Property and tracks not included in the City Work Final Design or Approved Plans for the C&M Work must be submitted to the Railway by the City for approval before work is undertaken and this work must not be undertaken until approved by the Railway.

- **1.03.08** At other than public road crossings, the Contractor must not move any equipment or materials across Railway's tracks until permission has been obtained from the Railway. The Contractor must obtain a "Temporary Construction Crossing Agreement" from the Railway prior to moving his equipment or materials across Railway's tracks. The temporary crossing must be gated and locked at all times when not required for use by the Contractor. The temporary crossing for use of the Contractor will be constructed and, at the completion of the project, removed at the expense of the Contractor.

- **1.03.09** Discharge, release or spill on the Railway Property of any hazardous substances, oil, petroleum, constituents, pollutants, contaminants, or any hazardous waste is prohibited and Contractor must immediately notify the Railway's Resource Operations Center at 1(800) 832-5452, of any discharge, release or spills in excess of a reportable quantity. Contractor must not allow Railway Property to become a treatment, storage or transfer facility as those terms are defined in the Resource Conservation and Recovery Act or any state analogue.

- **1.03.10** The Contractor, upon completion of the C&M Work, must promptly remove from the Railway Property all of Contractor's tools, equipment, implements and other materials, whether brought upon said Railway Property by Contractor or any subcontractor, employee or agent of Contractor or of any subcontractor, and must cause Railway Property to be left in a condition acceptable to Railway's Project Engineer.

1.04 Contractor Roadway Worker on Track Safety Program and Safety Action Plan

- **1.04.01** Each Contractor that will perform C&M Work within 25 feet of the centerline of a track must develop and implement a Roadway Worker Protection/On Track Safety Program and work with Railway's Project Engineer to develop an on track safety strategy as described in the guidelines listed in the on track safety portion of the Safety Orientation. This Program must provide Roadway Worker protection/on track training for all employees of the Contractor, its subcontractors, agents or invitees. This training is reinforced at the job site through job safety briefings. Additionally, each Contractor must develop and implement the Safety Action Plan, as provided for on the web site **www.contractororientation.com**, which will be made available to Railway prior to commencement of any work on Railway Property. During the performance of C&M Work, the Contractor must audit its C&M Work activities. The Contractor must designate an on-site Project Supervisor who will serve as the contact person for the Railway and who will maintain a copy of the Safety Action Plan, safety audits, and Material Safety Datasheets (MSDS), at the job site.

  Contractors shall ensure its employees, subcontractors and agents are United States citizens or legally working in this country under a work VISA.

1.05 Railway Flagger Services:

- **1.05.01** The Contractor must give Railway's Project Engineer, telephone number (402) 458-7537, a minimum of thirty (30) calendar days advance notice when flagging services will be required so that the Roadmaster can make appropriate arrangements (i.e., bulletin the flagger's position). If flagging services are scheduled in advance by the Contractor and it is subsequently determined by the parties hereto that such services are no longer necessary, the Contractor must give the Roadmaster five (5) working days advance notice so that appropriate arrangements can be made to abolish the position pursuant to union requirements.

- **1.05.02** Unless determined otherwise by Railway's Project Engineer, Railway flagger will be required and furnished when Contractor's C&M Work activities are located over, under and/or within twenty-five (25) feet measured horizontally from centerline of the nearest track and when cranes or similar equipment positioned beyond 25-feet from the track centerline could foul the track in the event of tip over or other catastrophic occurrence, but not limited thereto for the following conditions:

- **1.05.02a** When, upon inspection by Railway's Project Engineer, other conditions warrant.

- **1.05.02b** When any excavation is performed below the bottom of tie elevation, if, in the opinion of Railway's Project Engineer, track or other Railway facilities may be subject to movement or settlement.

- **1.05.02c** When C&M Work in any way interferes with the safe operation of trains at timetable speeds.

- **1.05.02d** When any hazard is presented to Railway track, communications, signal, electrical, or other facilities either due to persons, material, equipment or blasting in the vicinity.

- **1.05.02e** Special permission must be obtained from the Railway before moving heavy or cumbersome objects or equipment which might result in making the track impassable.

- **1.05.03** Flagging services will be performed by qualified Railway flaggers.

- **1.05.03a** Flagging crew generally consists of one employee. However, additional personnel may be required to protect Railway Property and operations, if deemed necessary by Railway's Project Engineer.

- **1.05.03b** Each time a flagger is called, the minimum period for billing will be the eight (8) hour basic day.

- **1.05.03c** The cost of flagger services provided by the Railway will be borne by City. The estimated cost for one (1) flagger is approximately between $800.00-$1,600.00 for an eight (8) hour basic day with time and one-half or double time for overtime, rest days and holidays. The estimated cost for each flagger includes vacation allowance, paid holidays, Railway and unemployment insurance, public liability and property damage insurance, health and welfare benefits, vehicle, transportation, meals, lodging, radio, equipment, supervision and other costs incidental to performing flagging services. Negotiations for Railway labor or collective bargaining agreements and rate changes authorized by appropriate Federal authorities may increase actual or estimated flagging rates. **THE GOVERNMENTAL FLAGGING RATE IN EFFECT AT THE TIME OF PERFORMANCE BY THE CONTRACTOR HEREUNDER WILL BE USED TO CALCULATE THE ACTUAL COSTS OF FLAGGING PURSUANT TO THIS PARAGRAPH.**

- **1.05.03d** The average train traffic on this route is 65 freight trains per 24-hour period at a timetable speed of 40 MPH and 2 passenger trains at a timetable speed of 15 MPH.

1.06 Contractor General Safety Requirements

- **1.06.01 C&M Work in the proximity of railway track(s) is potentially hazardous where movement of trains and equipment can occur at any time and in any direction. All work performed by contractors within 25 feet of any track must be in compliance with FRA Roadway Worker Protection Regulations. No Contractor shall conduct any tests, investigations or any other activity using mechanized equipment and/or machinery, or place or store any mechanized equipment, tools or other materials, within twenty-five (25) feet of the centerline of any railroad track on Railway Property, except after Contractor has obtained written approval from Railway Director Engineering Services, and then only in strict accordance with the terms and any conditions of such approval.**

- **1.06.02 Before beginning any task on Railway Property, a thorough job safety briefing must be conducted with all personnel involved with the task and repeated when the personnel or task changes. If the task is within 25 feet of any track, the job briefing <u>must</u> include the Railway's flagger, as applicable, and include the procedures the Contractor will use to protect its employees, subcontractors, agents or invitees from moving any equipment adjacent to or across any Railway track(s).**

- **1.06.03 Workers must not work within 25 feet of the centerline of any track without an on track safety strategy approved by Railway's Project Engineer. When authority is provided, every contractor employee must know: (1) who the Railway flagger is, and how to contact the flagger, (2) limits of the authority, (3) the method of communication to stop and resume work, and (4) location of the designated places of safety. Persons or equipment entering flag/work limits that were not previously job briefed, must notify the flagger immediately, and be given a job briefing when working within 25 feet of the center line of track.**

- **1.06.04 When Contractor employees are required to work on Railway Property after normal working hours or on weekends, Railway's Project Engineer must be notified. A minimum of two employees must be present at all times.**

- **1.06.05** Any employees, agents or invitees of Contractor or its subcontractors under suspicion of being under the influence of drugs or alcohol, or in the possession of same, will be removed from the Railway Property and subsequently released to the custody of a representative of Contractor management. Future access to the Railway Property by that employee will be denied.

- **1.06.06** Any damage to Railway Property, or any hazard noticed on passing trains must be reported immediately to the Railway's Project Engineer. Any vehicle or machine which may come in contact with track, signal equipment, or structure (bridge) and could result in a train derailment must be reported immediately to the Railway's Project Engineer and to the Railway's Resource Operations Center at 1 (800) 832-5452. Local emergency numbers are to be obtained from Railway's Project Engineer prior to the start of any C&M Work and must be posted at the job site.

- **1.06.07** For safety reasons, all persons are prohibited from having pocket knives, firearms or other deadly weapons in their possession while working on Railway Property.

- **1.06.08** All personnel protective equipment (PPE) used on Railway Property must meet applicable OSHA and ANSI specifications. Current Railway personnel protective equipment requirements are listed on the web site, **www.contractororientation.com**, however, a partial list of the requirements include: a) safety glasses with permanently affixed side shields (no yellow lenses); b) hard hats c) safety shoe with: hardened toes, above-the-ankle lace-up and a defined heel; and d) high visibility retro-reflective work wear. The Railway's Project Engineer is to be contacted regarding local specifications for meeting requirements relating to hi-visibility work wear. Hearing protection, fall protection, gloves, and respirators must be worn as required by State and Federal regulations. **(NOTE – Should there be a discrepancy between the information contained on the web site and the information in this paragraph, the web site will govern.)**

- **1.06.09 THE CONTRACTOR MUST NOT PILE OR STORE ANY MATERIALS, MACHINERY OR EQUIPMENT CLOSER THAN 25'-0" TO THE CENTER LINE OF THE NEAREST RAILWAY TRACK. MATERIALS, MACHINERY OR EQUIPMENT MUST NOT BE STORED OR LEFT WITHIN 250 FEET OF ANY HIGHWAY/RAIL AT-GRADE CROSSINGS OR TEMPORARY CONSTRUCTION CROSSING, WHERE STORAGE OF THE SAME WILL OBSTRUCT THE VIEW OF A TRAIN APPROACHING THE CROSSING. PRIOR TO BEGINNING WORK, THE CONTRACTOR MUST ESTABLISH A STORAGE AREA WITH CONCURRENCE OF THE RAILWAY'S PROJECT ENGINEER.**

- **1.06.10** Machines or vehicles must not be left unattended with the engine running. Parked machines or equipment must be in gear with brakes set and if equipped with blade, pan or bucket, they must be lowered to the ground. All machinery and equipment left unattended on Railway Property must be left inoperable and secured against movement. (See internet Engineering Contractor Safety Orientation program for more detailed specifications)

- **1.06.11** Workers must not create and leave any conditions at the work site that would interfere with water drainage. Any C&M Work performed over water must meet all Federal, State and Local regulations.

- **1.06.12** All power line wires must be considered dangerous and of high voltage unless informed to the contrary by proper authority. For all power lines the minimum clearance between the lines and any part of the equipment or load must be; 200 KV or below - 15 feet; 200 to 350 KV - 20 feet; 350 to 500 KV - 25 feet; 500 to 750 KV - 35 feet; and 750 to 1000 KV - 45 feet. If capacity of the line is not known, a minimum clearance of 45 feet must be maintained. A person must be designated to observe clearance of the

equipment and give a timely warning for all operations where it is difficult for an operator to maintain the desired clearance by visual means.

1.07 Excavation

- **1.07.01** Before excavating, the Contractor must determine whether any underground pipe lines, electric wires, or cables, including fiber optic cable systems are present and located within the C&M Work area. The Contractor must determine whether excavation on Railway Property could cause damage to buried cables resulting in delay to Railway traffic and disruption of service to users. Delays and disruptions to service may cause business interruptions involving loss of revenue and profits. Before commencing excavation, the Contractor must contact Railway's Project Engineer, telephone number (402) 458-7537. All underground and overhead wires will be considered HIGH VOLTAGE and dangerous until verified with the company having ownership of the line. **It is the Contractor's responsibility to notify any other companies that have underground utilities in the area and arrange for the location of all underground utilities before excavating.**

- **1.07.02** The Contractor must cease all work and notify Railway immediately before continuing excavation in the area if obstructions are encountered which do not appear on drawings. If the obstruction is a utility and the owner of the utility can be identified, then the Contractor must also notify the owner immediately. If there is any doubt about the location of underground cables or lines of any kind, no work must be performed until the exact location has been determined. There will be no exceptions to these instructions.

- **1.07.03** All excavations must be conducted in compliance with applicable OSHA regulations and, regardless of depth, must be shored where there is any danger to tracks, structures or personnel.

- **1.07.04** Any excavations, holes or trenches on Railway Property must be covered, guarded and/or protected when not being worked on. When leaving work site areas at night and over weekends, the areas must be secured and left in a condition that will ensure that Railway employees and other personnel who may be working or passing through the area are protected from all hazards. All excavations must be back filled as soon as possible.
- **1.07.05** Contractor will be responsible at no cost to Railway to locate and make any adjustments necessary to any wire lines, pipe lines, or other utilities, fences, buildings, improvements or other facilities located within Railway Property (collectively, "**Other Improvements**"). Contractor must contact the owner(s) of the Other Improvements notifying them of any work that may damage these Other Improvements and/or interfere with their service and, if required, obtain the owner's written approval prior to so affecting the Other Improvements. Contractor must mark all Railway improvements and Other Improvements on the applicable Approved Plans or other plans and specifications approved in advance by Railway, and mark all Railway improvements and Other Improvements in the field in order to verify their locations. Contractor must also use all reasonable methods when working on or near Railway Property to determine if any Railway improvements or Other Improvements (fiber optic, cable, communication or otherwise) may exist. Failure to mark or identify any Railway improvements or Other Improvements will be sufficient cause for Railway to stop construction at no cost to Railway until such items are completed. Contractor must make all adjustments and other work described in this Section 1.07.05, including without limitation adjustments to Other Improvements and work on and affecting Railway Property, in a manner that does not adversely impact utility service to Railway.

1.08 Hazardous Waste, Substances and Material Reporting

- **1.08.01** If Contractor discovers any hazardous waste, hazardous substance, petroleum or other deleterious material, including but not limited to any non-containerized commodity or material, on or adjacent to Railway Property, in or near any surface water, swamp, wetlands or waterways, while performing any work under this Agreement, Contractor must immediately: (a) notify the Railway's Resource Operations Center at 1 (800) 832-5452, of such discovery: (b) take safeguards necessary to protect its employees, subcontractors, agents and/or third parties: and (c) exercise due care with respect to the release, including the taking of any appropriate measure to minimize the impact of such release.

1.09 Personal Injury Reporting

- **1.09.01** The Railway is required to report certain injuries as a part of compliance with Federal Railroad Administration (FRA) reporting requirements. Any personal injury sustained by an employee of the Contractor, subcontractor or Contractor's invitees while on the Railway Property must be reported immediately (by phone mail if unable to contact in person) to the Railway's Project Engineer. The Non-Employee Personal Injury Data Collection Form contained herein is to be completed and sent by Fax to the Railway at 1 (817) 352-7595 and to the Railway's Project Engineer no later than the close of shift on the date of the injury.

NON-EMPLOYEE PERSONAL INJURY DATA COLLECTION

INFORMATION REQUIRED TO BE COLLECTED PURSUANT TO FEDERAL REGULATION. IT SHOULD BE USED FOR COMPLIANCE WITH FEDERAL REGULATIONS ONLY AND IS NOT INTENDED TO PRESUME ACCEPTANCE OF RESPONSIBILITY OR LIABILITY.

1. Accident City/St
2. Date: _____ Time: _____ County:
3. Temperature:
4. Weather
   (if non-Railway location)

5. Social Security #

6. Name (last, first, mi)

7. Address: Street: _____ City: _____ St. Zip:

8. Date of Birth: _____ and/or Age _____ Gender:
   (if available)

9. (a) Injury: _____ (b) Body Part:
   (i.e. (a) Laceration (b) Hand)

11. Description of Accident (To include location, action, result, etc.):

12. Treatment:
    __ First Aid Only
    __ Required Medical Treatment
    __ Other Medical Treatment

13. Dr. Name _____ 30. Date: _____

14. Dr. Address:
    Street: _____ City: _____ St: _____ Zip: _____

15. Hospital Name:

16. Hospital Address:
    Street: _____ City: _____ St: _____ Zip: _____

17. Diagnosis:

FAX TO RAILWAY AT (817) 352-7595
AND COPY TO RAILWAY ROADMASTER FAX

EXHIBIT C-1A

CONTRACTOR'S RIGHT OF ENTRY
For C&M Work

BNSF RAILWAY COMPANY
Attention: Project Engineer

Gentlemen:

The undersigned (hereinafter, the "**Contractor**"), has entered into a contract (the "**Contract**") dated _____, 20_ with the City of Lincoln, Nebraska ("**City**") for the performance of certain work ("**C&M Work**") in connection with the construction of entertainment, recreation, lodging, offices, retail and/or other complementary and/or supporting facilities in Lincoln, Nebraska (collectively, the "**West Haymarket Project**"). The work to be performed under this Agreement is deemed to be "City C&M Work" (as defined in that certain Construction and Maintenance Agreement ["**C&M Agreement**"] dated _____, 2010, between BNSF Railway Company and the City). Performance of such C&M Work will necessarily require Contractor to enter BNSF RAILWAY COMPANY ("**Railway**") right of way and property ("**Railway Property**"). The Contract provides that no C&M Work will be commenced within Railway Property until the Contractor employed in connection with said C&M Work for the **City of Lincoln, Nebraska** (i) executes and delivers to Railway an Agreement in the form hereof, and (ii) provides insurance of the coverage and limits specified in such Agreement and Section 3 herein. If this Agreement is executed by a party who is not the Owner, General Partner, President or Vice President of Contractor, Contractor must furnish evidence to Railway certifying that the signatory is empowered to execute this Agreement on behalf of Contractor.

Accordingly, in consideration of Railway granting permission to Contractor to enter upon Railway Property and as an inducement for such entry, Contractor, effective on the date of the Contract, has agreed and does hereby agree with Railway as follows:

Section 1. RELEASE OF LIABILITY AND INDEMNITY

TO THE FULLEST EXTENT PERMITTED BY LAW, CONTRACTOR SHALL RELEASE, INDEMNIFY, DEFEND AND HOLD HARMLESS RAILWAY AND RAILWAY'S AFFILIATED COMPANIES, PARTNERS, SUCCESSORS, ASSIGNS, LEGAL REPRESENTATIVES, OFFICERS, DIRECTORS, SHAREHOLDERS, EMPLOYEES AND AGENTS FOR, FROM AND AGAINST ANY AND ALL CLAIMS, LIABILITIES, FINES, PENALTIES, COSTS, DAMAGES, LOSSES, LIENS, CAUSES OF ACTION, SUITS, DEMANDS, JUDGMENTS AND EXPENSES (INCLUDING, WITHOUT LIMITATION, COURT COSTS AND ATTORNEYS' FEES) OF ANY NATURE, KIND OR DESCRIPTION OF ANY PERSON (INCLUDING, WITHOUT LIMITATION, THE EMPLOYEES OF THE PARTIES HERETO) OR ENTITY DIRECTLY OR INDIRECTLY (COLLECTIVELY, "LIABILITIES") ARISING OUT OF, RESULTING FROM OR CAUSALLY RELATED TO (IN WHOLE OR IN PART):

(i) ANY RIGHTS OR INTERESTS GRANTED TO CONTRACTOR PURSUANT TO THIS AGREEMENT;

(ii) THE USE, OCCUPANCY OR PRESENCE OF CONTRACTOR AND CONTRACTOR PARTIES (DEFINED BELOW) AND/OR ANY WORK PERFORMED BY CONTRACTOR AND CONTRACTOR PARTIES IN, ON, OR ABOUT RAILWAY'S PROPERTY OR RIGHT-OF-WAY AND/OR THE WEST HAYMARKET PROJECT, INCLUDING, WITHOUT LIMITATION, OPERATION OF THE PEDESTRIAN BRIDGE, SECURITY FENCING, OR STORM WATER MITIGATION BY ANY CONTRACTOR PARTY (DEFINED BELOW);

(iii) ANY ENVIRONMENTAL MATTERS ARISING FROM CONTRACTOR AND/OR CONTRACTOR PARTIES' USE AND OCCUPANCY OF RAILWAY'S RIGHT-OF-WAY OR OTHER RAILWAY PROPERTY, INCLUDING WITHOUT LIMITATION USE AND OCCUPANCY OF RAILWAY'S RIGHT-OF-WAY OR OTHER RAILWAY PROPERTY IN CONNECTION WITH PERFORMANCE OF THE C&M WORK;

(iv) ANY DAMAGE TO OR DESTRUCTION OF ANY TELECOMMUNICATION LINES IN CONNECTION WITH THE WEST HAYMARKET PROJECT BY CONTRACTOR AND/OR CONTRACTOR PARTIES, INCLUDING BUT NOT LIMITED TO (A) ANY INJURY TO OR DEATH OF ANY PERSON EMPLOYED BY OR ON BEHALF OF ANY TELECOMMUNICATIONS COMPANY, AND/OR ITS CONTRACTORS, AGENTS AND/OR EMPLOYEES AS A RESULT OF SUCH DAMAGE OR DESTRUCTION, AND/OR (B) ANY CLAIM OR CAUSE OF ACTION FOR ALLEGED LOSS OF PROFITS OR REVENUE BY, OR LOSS OF SERVICE BY A CUSTOMER OR USER OF SUCH TELECOMMUNICATION COMPANY(IES) AS A RESULT OF SUCH DAMAGE OR DESTRUCTION;

(v) CONTRACTOR'S BREACH OF THE TERMS AND CONDITIONS OF THIS AGREEMENT; OR

(vi) ANY ACT OR OMISSION OF CONTRACTOR OR ITS OFFICERS, AGENTS, INVITEES, EMPLOYEES OR SUBCONTRACTORS (SUCH OFFICERS, AGENTS, INVITEES, EMPLOYEES AND SUBCONTRACTORS BEING REFERRED TO HEREIN INDIVIDUALLY AS A "CONTRACTOR PARTY" AND COLLECTIVELY, "CONTRACTOR PARTIES"), OR ANYONE DIRECTLY OR INDIRECTLY EMPLOYED BY ANY OF THEM, OR ANYONE THEY CONTROL OR EXERCISE CONTROL OVER.

THE LIABILITY ASSUMED BY CONTRACTOR WILL NOT BE AFFECTED BY THE FACT, IF IT IS A FACT, THAT ANY DAMAGE, DESTRUCTION, INJURY OR DEATH WAS OCCASIONED BY OR CONTRIBUTED TO BY THE NEGLIGENCE OF RAILWAY, ITS AGENTS, SERVANTS, EMPLOYEES OR OTHERWISE, BUT EXCLUDING CLAIMS WHOLLY CAUSED BY RAILWAY'S SOLE NEGLIGENCE AND EXCLUDING CLAIMS TO THE EXTENT THAT SUCH CLAIMS ARE CAUSED BY THE WILLFUL MISCONDUCT OR GROSS NEGLIGENCE OF RAILWAY.

FURTHER, TO THE FULLEST EXTENT PERMITTED BY LAW, CONTRACTOR AGREES, REGARDLESS OF ANY NEGLIGENCE OR ALLEGED NEGLIGENCE OF RAILWAY, TO INDEMNIFY,

DEFEND AND HOLD HARMLESS RAILWAY AGAINST AND ASSUME THE DEFENSE OF ANY LIABILITIES ASSERTED AGAINST OR SUFFERED BY RAILWAY UNDER OR RELATED TO THE FEDERAL EMPLOYERS' LIABILITY ACT ("FELA") WHENEVER EMPLOYEES OF CONTRACTOR OR ANY CONTRACTOR PARTY CLAIM OR ALLEGE THAT THEY ARE EMPLOYEES OF RAILWAY OR OTHERWISE. THIS INDEMNITY SHALL ALSO EXTEND, ON THE SAME BASIS, TO FELA CLAIMS BASED ON ACTUAL OR ALLEGED VIOLATIONS OF ANY FEDERAL, STATE OR LOCAL LAWS OR REGULATIONS, INCLUDING BUT NOT LIMITED TO THE SAFETY APPLIANCE ACT, THE LOCOMOTIVE INSPECTION ACT, THE OCCUPATIONAL SAFETY AND HEALTH ACT, THE RESOURCE CONSERVATION AND RECOVERY ACT, AND ANY SIMILAR STATE OR FEDERAL STATUTE.

Contractor further agrees, at its expense, in the name and on behalf of Railway, that it will adjust and settle all Liabilities against Railway, and will, at Railway's discretion, appear and defend any suits or actions of law or in equity brought against Railway on any claim or cause of action arising out of any liability assumed by Contractor under this Agreement for which Railway is liable or is alleged to be liable. Railway will give notice to Contractor, in writing, of the receipt or dependency of such claims and thereupon Contractor must proceed to adjust and handle to a conclusion such claims, and in the event of a suit being brought against Railway, Railway may forward summons and complaint or other process in connection therewith to Contractor, and Contractor, at Railway's discretion, must defend, adjust, or settle such suits and protect, indemnify, and save harmless Railway from and against all Liabilities arising out of any such claims or suits, provided that the foregoing indemnification obligations do not include Liabilities arising wholly out of the sole negligence of Railway or to the extent caused by the gross negligence or willful misconduct of Railway.

In addition to any other provision of this Agreement, in the event that all or any portion of this Article shall be deemed to be inapplicable for any reason, including without limitation as a result of a decision of an applicable court, legislative enactment or regulatory order, the parties agree that this Article shall be interpreted as requiring Contractor to indemnify Railway to the fullest extent permitted by applicable law. **THROUGH THIS AGREEMENT THE PARTIES EXPRESSLY INTEND FOR CONTRACTOR TO INDEMNIFY RAILWAY FOR RAILWAY'S ACTS OF NEGLIGENCE, BUT EXCLUDING CLAIMS WHOLLY CAUSED BY RAILWAY'S SOLE NEGLIGENCE AND EXCLUDING CLAIMS TO THE EXTENT THAT SUCH CLAIMS ARE CAUSED BY THE WILLFUL MISCONDUCT OR GROSS NEGLIGENCE OF RAILWAY.**

It is mutually understood and agreed that the assumption of liabilities and indemnification provided for in this Agreement survive any termination of this Agreement.

Section 2. TERM

This Agreement is effective from the date of the Contract until (i) the completion of the project set forth herein, and (ii) full and complete payment to Railway of any and all sums or other amounts owing and due hereunder.

Section 3. INSURANCE

Contractor must, at its sole cost and expense, procure and maintain during the life of this Agreement the following insurance coverage:

A. Commercial General Liability Insurance. This insurance shall contain broad form contractual liability with a combined single limit of a minimum of $5,000,000.00 per occurrence, and $10,000,000.00 in the aggregate, but in no event less than the amount otherwise carried by the Contractor. Coverage must be purchased on a post 1998 ISO occurrence form or equivalent and include coverage for, but not limited to, the following:

- Bodily Injury and Property Damage
- Personal Injury and Advertising Injury
- Fire legal liability
- Products and completed operations

This policy shall also contain the following endorsements, which shall be indicated on the certificate of insurance:

- The definition of insured contract shall be amended to remove any exclusion or other limitation for any work being done within 50 feet of railroad property.
- Waiver of subrogation in favor of and acceptable to Railroad.
- Additional insured endorsement in favor of and acceptable to Railroad.
- Separation of insureds.
- The policy shall be primary and non-contributing with respect to any insurance carried by Railroad.

It is agreed that the workers' compensation and employers' liability related exclusions in the Commercial General Liability insurance policy(s) required herein are intended to apply to employees of the policy holder and shall not apply to Railroad employees.

No other endorsements limiting coverage as respects obligations under this Agreement may be included on the policy with regard to the work being performed under this Agreement.

B. Business Automobile Insurance. This insurance shall contain a combined single limit of at least $1,000,000 per occurrence, and include coverage for, but not limited to the following:

- Bodily injury and property damage
- Any and all vehicles owned, used or hired

This policy shall also contain the following endorsements or language, which shall be indicated on the certificate of insurance:

- Waiver of subrogation in favor of and acceptable to Railroad.
- Additional insured endorsement in favor or and acceptable to Railroad.
- Separation of insureds.
- The policy shall be primary and non-contributing with respect to any insurance carried by Railroad.

C. Workers Compensation and Employers Liability Insurance. This insurance shall include coverage for, but not limited to:

- Contractor's statutory liability under the worker's compensation laws of the state(s) in which the work is to be performed. If optional under State law, the insurance must cover all employees anyway.
- Employers' Liability (Part B) with limits of at least $500,000 each accident, $500,000 by disease policy limit, $500,000 by disease each employee.

This policy shall also contain the following endorsements or language, which shall be indicated on the certificate of insurance:

- Waiver of subrogation in favor of and acceptable to Railroad.

D. Railroad Protective Liability Insurance. This insurance shall name only the Railroad as the Insured with coverage of at least $5,000,000 per occurrence and $10,000,000 in the aggregate. The policy shall be issued on a standard ISO form CG 00 35 10 93 and include the following:

- Endorsed to include the Pollution Exclusion Amendment (ISO form CG 28 31 10 93)
- Endorsed to include the Limited Seepage and Pollution Endorsement.
- Endorsed to remove any exclusion for punitive damages.
- No other endorsements restricting coverage may be added.
- The original policy must be provided to Railroad prior to performing any work or services under this Agreement

In lieu of providing a Railroad Protective Liability Policy, Contractor may participate in BNSF's Blanket Railroad Protective Liability Insurance Policy available to Contractor.

Other Requirements:

All policies (applying to coverage listed above) must not contain an exclusion for punitive damages and certificates of insurance must reflect that no exclusion exists.

Contractor agrees to waive its right of recovery against Railroad for all claims and suits against Railroad, except for claims and suits arising wholly out of the sole negligence, or to the extent caused by the gross negligence or willful misconduct, of Railroad. In addition, its insurers, through the terms of the policy or policy endorsement, waive their right of subrogation against Railroad for all claims and suits, except for claims and suits arising wholly out of the sole negligence, or to the extent caused by the gross negligence of willful misconduct, of Railroad. The certificate of insurance must reflect the waiver of subrogation endorsement. Contractor further waives its right of recovery, and its insurers also waive their right of subrogation against Railroad for loss of its owned or leased property or property under Contractor's care, custody or control, except for the right of recovery or right of subrogation arising wholly out of the sole negligence, or to the extent caused by the gross negligence or willful misconduct, of Railroad.

Contractor is not allowed to self-insure without the prior written consent of Railroad. If granted by Railroad, any deductible, self-insured retention or other financial responsibility for claims must be covered directly by Contractor in lieu of insurance. Any and all Railroad liabilities that would otherwise, in accordance with the provisions of this Agreement, be covered by Contractor's insurance will be covered as if Contractor elected not to include a deductible, self-insured retention or other financial responsibility for claims.

Prior to commencing the C&M Work, Contractor must furnish to Railroad acceptable certificate(s) of insurance including an original signature of the authorized representative evidencing the required coverage, endorsements, and amendments. The policy(ies) must contain a provision that obligates the insurance company(ies) issuing such policy(ies) to notify Railroad in writing at least 30 days prior to any cancellation, non-renewal, substitution or material alteration. This cancellation provision must be indicated on the certificate

of insurance. Upon request from Railroad, a certified duplicate original of any required policy must be furnished. Certificate(s) should be sent to the following address:

Ebix BPO
PO Box 12010-BN
Hemet, CA 92546-8010
Fax number: 951-652-2882
Email: bnsf@ebix.com

Any insurance policy must be written by a reputable insurance company reasonably acceptable to Railroad or with a current Best's Guide Rating of A- and Class VII or better, and authorized to do business in the state(s) in which the service is to be provided.

Contractor represents that this Agreement has been thoroughly reviewed by Contractor's insurance agent(s)/broker(s), who have been instructed by Contractor to procure the insurance coverage required by this Agreement. Allocated Loss Expense must be in addition to all policy limits for coverages referenced above.

Not more frequently than once every five years, Railroad may reasonably modify the required insurance coverage to reflect then-current risk management practices in the railroad industry and underwriting practices in the insurance industry.

If any portion of the operation is to be subcontracted by Contractor, Contractor must require that its subcontractors provide and maintain the insurance coverages set forth herein, naming Railroad as an additional insured, and requiring that the subcontractors release, defend and indemnify Railroad to the same extent and under the same terms and conditions as Contractor is required to release, defend and indemnify Railroad herein.

Failure to provide evidence as required by this section will entitle, but not require, Railroad to immediately suspend work under this Agreement until such evidence is provided. Acceptance of a certificate that does not comply with this section will not operate as a waiver of Contractor's obligations hereunder.

The fact that insurance (including, without limitation, self-insurance) is obtained by Contractor will not be deemed to release or diminish the liability of Contractor including, without limitation, liability under the indemnity provisions of this Agreement. Damages recoverable by Railroad will not be limited by the amount of the required insurance coverage.

For purposes of this section, Railroad means "Burlington Northern Santa Fe, LLC", "BNSF Railway Company" and the subsidiaries, successors, assigns and affiliates of each.

Section 4. EXHIBIT C CONTRACTOR REQUIREMENTS

The Contractor must observe and comply with all provisions, obligations, requirements and limitations contained in the Contract, and the Contractor Requirements set forth on Exhibit C attached to this Agreement and the Contract, including, but not be limited to, payment of all costs incurred for any damages to Railway

roadbed, tracks, and/or appurtenances thereto, resulting from use, occupancy, or presence of its employees, representatives, or agents or subcontractors on or about the construction site.

Section 5. TRAIN DELAY

Contractor is responsible for and hereby indemnifies and holds harmless Railway (including its affiliated railway companies, and its tenants) for, from and against all damages arising from any unscheduled delay to a freight or passenger train which affects Railway's ability to fully utilize its equipment and to meet customer service and contract obligations. Contractor will be billed, as further provided below, for the economic losses arising from loss of use of equipment, contractual loss of incentive pay and bonuses and contractual penalties resulting from train delays, whether caused by Contractor, or subcontractors, or by the Railway performing work under this Agreement. Railway agrees that it will not perform any act to unnecessarily cause train delay.

For loss of use of equipment, Contractor will be billed the current freight train hour rate per train as determined from Railway's records. Any disruption to train traffic may cause delays to multiple trains at the same time for the same period.

Additionally, the parties acknowledge that passenger, U.S. mail trains and certain other grain, intermodal, coal and freight trains operate under incentive/penalty contracts between Railway and its customer(s). Under these arrangements, if Railway does not meet its contract service commitments, Railway may suffer loss of performance or incentive pay and/or be subject to penalty payments. Contractor is responsible for any train performance and incentive penalties or other contractual economic losses actually incurred by Railway which are attributable to a train delay caused by Contractor or its subcontractors.

The contractual relationship between Railway and its customers is proprietary and confidential. In the event of a train delay covered by this Agreement, Railway will share information relevant to any train delay to the extent consistent with Railway confidentiality obligations. Damages for train delay are currently $382.20 per hour per incident. **THE RATE THEN IN EFFECT AT THE TIME OF PERFORMANCE BY THE CONTRACTOR HEREUNDER WILL BE USED TO CALCULATE THE ACTUAL COSTS OF TRAIN DELAY PURSUANT TO THIS AGREEMENT.**

Contractor and its subcontractors must give Railway's Project Engineer (402) 458-7537 thirty (30) days' minimum advance notice of the times and dates for proposed work windows. Railway and Contractor will establish mutually agreeable work windows for the project. Railway has the right at any time to revise or change the work windows due to train operations or service obligations. Railway will not be responsible for any additional costs or expenses resulting from a change in work windows. Additional costs or expenses resulting from a change in work windows shall be accounted for in Contractor's expenses for the project.

Contractor and subcontractors must plan, schedule, coordinate and conduct all Contractor's work so as to not cause any delays to any trains.

[Signature page follows]

Kindly acknowledge receipt of this letter by signing and returning to the Railway two original copies of this letter, which, upon execution by Railway, will constitute an Agreement between us.

_____	
(**Contractor**)	**BNSF Railway Company**
By:_____	By:_____
Printed Name: _____	Name:_____
Title:_____	*Project Engineer*
Contact Person: _____	Accepted and effective this _____day of 20__.
Address: _____	
_____	
City:_____ State:___ Zip:____	
Fax: _____	
Phone: _____	
E-mail:_____	

F:\Projects\010-1633\Documents\alter\sliver\spec\BNSF transition property spec1.docx

FIGURES

Figure 1-Site Map
Figure 2- Detailed Site Map

Attachment A

Laboratory Reports

Detection Summary

Client: ALFRED BENESCH & COMPANY
Project/Site: [none]

TestAmerica Job ID: CUJ1112

Client Sample ID: AL SB-12 (0-3') 10/08/2011 — Lab Sample ID: CUJ1112-01

Analyte	Result	Qualifier	RL	MDL	Unit	Dil Fac	D	Method	Prep Type
PCB-1242	173000		63900		ug/kg dry	1000	☼	SW 8082A	Total

Client Sample ID: AL SB-14 (0-3') 10/08/2011 — Lab Sample ID: CUJ1112-02

Analyte	Result	Qualifier	RL	MDL	Unit	Dil Fac	D	Method	Prep Type
Mercury	0.0302	M1 R	0.0227		mg/kg dry	1.00	☼	SW 7471B	Total
Arsenic	225		13.6		mg/kg dry	3.00	☼	SW 6010C	Total
Barium	200		1.70		mg/kg dry	3.00	☼	SW 6010C	Total
Chromium	20.9		3.40		mg/kg dry	3.00	☼	SW 6010C	Total
Lead	22.8		17.0		mg/kg dry	3.00	☼	SW 6010C	Total

Client Sample ID: AL SB-15 (0-3') 10/08/2011 — Lab Sample ID: CUJ1112-03

Analyte	Result	Qualifier	RL	MDL	Unit	Dil Fac	D	Method	Prep Type
PCB-1242	1190000		326000		ug/kg dry	5000	☼	SW 8082A	Total

Client Sample ID: AL SB-16 (0-3') 10/08/2011 — Lab Sample ID: CUJ1112-04

Analyte	Result	Qualifier	RL	MDL	Unit	Dil Fac	D	Method	Prep Type
PCB-1242	27000		6390		ug/kg dry	100	☼	SW 8082A	Total

Client Sample ID: AL SB-16 (3-6') 10/08/2011 — Lab Sample ID: CUJ1112-05

Analyte	Result	Qualifier	RL	MDL	Unit	Dil Fac	D	Method	Prep Type
PCB-1016	125		73.9		ug/kg dry	1.00	☼	SW 8082A	Total

Client Sample ID: AL SB-17 (0-3') 10/08/2011 — Lab Sample ID: CUJ1112-06

Analyte	Result	Qualifier	RL	MDL	Unit	Dil Fac	D	Method	Prep Type
PCB-1242	423000		63600		ug/kg dry	1000	☼	SW 8082A	Total

Client Sample ID: AL SB-17 (3-6') 10/08/2011 — Lab Sample ID: CUJ1112-07

Analyte	Result	Qualifier	RL	MDL	Unit	Dil Fac	D	Method	Prep Type
PCB-1016	77.8		71.2		ug/kg dry	1.00	☼	SW 8082A	Total

Client Sample ID: AL SB-18 (0-3') 10/08/2011 — Lab Sample ID: CUJ1112-08

Analyte	Result	Qualifier	RL	MDL	Unit	Dil Fac	D	Method	Prep Type
PCB-1242	56800		6780		ug/kg dry	100	☼	SW 8082A	Total

Client Sample ID: AL SB-18 (3-6') 10/08/2011 — Lab Sample ID: CUJ1112-09

Analyte	Result	Qualifier	RL	MDL	Unit	Dil Fac	D	Method	Prep Type
PCB-1242	199		72.9		ug/kg dry	1.00	☼	SW 8082A	Total

Client Sample ID: AL SB-19 (0-3') 10/08/2011 — Lab Sample ID: CUJ1112-10

Analyte	Result	Qualifier	RL	MDL	Unit	Dil Fac	D	Method	Prep Type
PCB-1242	111000		63300		ug/kg dry	1000	☼	SW 8082A	Total
Mercury	1.29		0.109		mg/kg dry	5.00	☼	SW 7471B	Total
Arsenic	24.6		13.1		mg/kg dry	3.00	☼	SW 6010C	Total
Barium	246		1.63		mg/kg dry	3.00	☼	SW 6010C	Total

Exhibit A

Detection Summary

Client: ALFRED BENESCH & COMPANY
Project/Site: [none]

TestAmerica Job ID: CUJ1112

Client Sample ID: AL SB-19 (0-3') 10/08/2011 (Continued) — Lab Sample ID: CUJ1112-10

Analyte	Result	Qualifier	RL	MDL	Unit	Dil Fac	D	Method	Prep Type
Cadmium	3.93		3.26		mg/kg dry	3.00	☼	SW 6010C	Total
Chromium	33.6		3.26		mg/kg dry	3.00	☼	SW 6010C	Total
Lead	1160		16.3		mg/kg dry	3.00	☼	SW 6010C	Total

Client Sample ID: AL SB-19 (3-6') 10/08/2011 — Lab Sample ID: CUJ1112-11

Analyte	Result	Qualifier	RL	MDL	Unit	Dil Fac	D	Method	Prep Type
PCB-1242	403		66.3		ug/kg dry	1.00	☼	SW 8082A	Total

Client Sample ID: AL SB-20 (0-3') 10/08/2011 — Lab Sample ID: CUJ1112-12

Analyte	Result	Qualifier	RL	MDL	Unit	Dil Fac	D	Method	Prep Type
PCB-1242	413000		68300		ug/kg dry	1000	☼	SW 8082A	Total

Client Sample ID: AL SB-20 (3-6') 10/08/2011 — Lab Sample ID: CUJ1112-13

Analyte	Result	Qualifier	RL	MDL	Unit	Dil Fac	D	Method	Prep Type
PCB-1242	112		69.8		ug/kg dry	1.00	☼	SW 8082A	Total

Client Sample ID: AL SB-21 (0-3') 10/08/2011 — Lab Sample ID: CUJ1112-14

Analyte	Result	Qualifier	RL	MDL	Unit	Dil Fac	D	Method	Prep Type
PCB-1242	167000		66200		ug/kg dry	1000	☼	SW 8082A	Total

Client Sample ID: AL SB-21 (3-6') 10/08/2011 — Lab Sample ID: CUJ1112-15

No Detections

Exhibit A

Detection Summary

Client: ALFRED BENESCH & COMPANY
Project/Site: [none]

TestAmerica Job ID: CUJ1113

Client Sample ID: AL SB-22 (6-9') 10/08/2011 — Lab Sample ID: CUJ1113-01

Analyte	Result	Qualifier	RL	MDL	Unit	Dil Fac	D	Method	Prep Type
PCB-1242	4670		1440		ug/kg dry	20.0	☼	SW 8082A	Total

Client Sample ID: AL SB-22 (0-3') 10/08/2011 — Lab Sample ID: CUJ1113-02

Analyte	Result	Qualifier	RL	MDL	Unit	Dil Fac	D	Method	Prep Type
PCB-1242	4770		1290		ug/kg dry	20.0	☼	SW 8082A	Total
Mercury	0.993		0.111		mg/kg dry	5.00	☼	SW 7471B	Total
Barium	196		1.66		mg/kg dry	3.00	☼	SW 6010C	Total
Chromium	40.0		3.32		mg/kg dry	3.00	☼	SW 6010C	Total
Lead	2190		16.6		mg/kg dry	3.00	☼	SW 6010C	Total

Client Sample ID: AL SB-22 (3-6') 10/08/2011 — Lab Sample ID: CUJ1113-03

Analyte	Result	Qualifier	RL	MDL	Unit	Dil Fac	D	Method	Prep Type
PCB-1242	289000		69500		ug/kg dry	1000	☼	SW 8082A	Total

Client Sample ID: AL SB-23 (0-3') 10/08/2011 — Lab Sample ID: CUJ1113-04

Analyte	Result	Qualifier	RL	MDL	Unit	Dil Fac	D	Method	Prep Type
PCB-1242	10000		1370		ug/kg dry	20.0	☼	SW 8082A	Total

Client Sample ID: AL SB-23 (3-6') 10/08/2011 — Lab Sample ID: CUJ1113-05

Analyte	Result	Qualifier	RL	MDL	Unit	Dil Fac	D	Method	Prep Type
PCB-1242	154		71.3		ug/kg dry	1.00	☼	SW 8082A	Total

Client Sample ID: AL SB-24 (0-3') 10/08/2011 — Lab Sample ID: CUJ1113-06

Analyte	Result	Qualifier	RL	MDL	Unit	Dil Fac	D	Method	Prep Type
PCB-1242	50600		6780		ug/kg dry	100	☼	SW 8082A	Total

Client Sample ID: AL SB-24 (3-6') 10/08/2011 — Lab Sample ID: CUJ1113-07

Analyte	Result	Qualifier	RL	MDL	Unit	Dil Fac	D	Method	Prep Type
PCB-1242	120		71.5		ug/kg dry	1.00	☼	SW 8082A	Total

Client Sample ID: AL SB-25 (0-3') 10/08/2011 — Lab Sample ID: CUJ1113-08

Analyte	Result	Qualifier	RL	MDL	Unit	Dil Fac	D	Method	Prep Type
PCB-1242	251000		69200		ug/kg dry	1000	☼	SW 8082A	Total
Mercury	0.230		0.0233		mg/kg dry	1.00	☼	SW 7471B	Total
Barium	248		1.74		mg/kg dry	3.00	☼	SW 6010C	Total
Chromium	25.9		3.49		mg/kg dry	3.00	☼	SW 6010C	Total
Lead	2160		17.4		mg/kg dry	3.00	☼	SW 6010C	Total

Client Sample ID: AL SB-25 (3-6') 10/08/2011 — Lab Sample ID: CUJ1113-09

Analyte	Result	Qualifier	RL	MDL	Unit	Dil Fac	D	Method	Prep Type
PCB-1242	149		74.1		ug/kg dry	1.00	☼	SW 8082A	Total

Client Sample ID: AL SB-26 (0-3') 10/08/2011 — Lab Sample ID: CUJ1113-10

Exhibit A

Detection Summary

Client: ALFRED BENESCH & COMPANY
Project/Site: [none]

TestAmerica Job ID: CUJ1113

Client Sample ID: AL SB-26 (0-3') 10/08/2011 (Continued) — Lab Sample ID: CUJ1113-10

Analyte	Result	Qualifier	RL	MDL	Unit	Dil Fac	D	Method	Prep Type
PCB-1254	1210		326		ug/kg dry	5.00	☼	SW 8082A	Total

Client Sample ID: AL SB-26 (3-6') 10/08/2011 — Lab Sample ID: CUJ1113-11

Analyte	Result	Qualifier	RL	MDL	Unit	Dil Fac	D	Method	Prep Type
PCB-1016	141		71.7		ug/kg dry	1.00	☼	SW 8082A	Total

Client Sample ID: AL SB-27 (0-3') 10/08/2011 — Lab Sample ID: CUJ1113-12

Analyte	Result	Qualifier	RL	MDL	Unit	Dil Fac	D	Method	Prep Type
PCB-1242	99200		67500		ug/kg dry	1000	☼	SW 8082A	Total

Client Sample ID: AL SB-27 (3-6') 10/08/2011 — Lab Sample ID: CUJ1113-13

No Detections

Client Sample ID: AL SB-28 (0-3') 10/08/2011 — Lab Sample ID: CUJ1113-14

Analyte	Result	Qualifier	RL	MDL	Unit	Dil Fac	D	Method	Prep Type
PCB-1242	429000		66300		ug/kg dry	1000	☼	SW 8082A	Total

Client Sample ID: AL SB-28 (3-6') 10/08/2011 — Lab Sample ID: CUJ1113-15

Analyte	Result	Qualifier	RL	MDL	Unit	Dil Fac	D	Method	Prep Type
PCB-1242	598		72.1		ug/kg dry	1.00	☼	SW 8082A	Total

Client Sample ID: AL SB-29 (0-3') 10/08/2011 — Lab Sample ID: CUJ1113-16

Analyte	Result	Qualifier	RL	MDL	Unit	Dil Fac	D	Method	Prep Type
PCB-1254	417		68.7		ug/kg dry	1.00	☼	SW 8082A	Total

Client Sample ID: AL SB-29 (3-6') 10/08/2011 — Lab Sample ID: CUJ1113-17

Analyte	Result	Qualifier	RL	MDL	Unit	Dil Fac	D	Method	Prep Type
PCB-1242	202		70.9		ug/kg dry	1.00	☼	SW 8082A	Total

Client Sample ID: AL SB-30 (0-3') 10/08/2011 — Lab Sample ID: CUJ1113-18

Analyte	Result	Qualifier	RL	MDL	Unit	Dil Fac	D	Method	Prep Type
n-Butylbenzene	67.6		19.3		ug/kg dry	1.00	☼	SW 8260B	Total
Ethylbenzene	53.5		19.3		ug/kg dry	1.00	☼	SW 8260B	Total
Naphthalene	101	CIN	96.6		ug/kg dry	1.00	☼	SW 8260B	Total
1,2,4-Trimethylbenzene	405		19.3		ug/kg dry	1.00	☼	SW 8260B	Total
Xylenes, total	362		58.0		ug/kg dry	1.00	☼	SW 8260B	Total
PCB-1242	1490000		328000		ug/kg dry	5000	☼	SW 8082A	Total

Client Sample ID: AL SB-30 (3-6') 10/08/2011 — Lab Sample ID: CUJ1113-19

Analyte	Result	Qualifier	RL	MDL	Unit	Dil Fac	D	Method	Prep Type
PCB-1242	84.0		72.0		ug/kg dry	1.00	☼	SW 8082A	Total

Client Sample ID: AL SB-31 (0-3') 10/07/2011 — Lab Sample ID: CUJ1113-20

Exhibit A

Detection Summary

Client: ALFRED BENESCH & COMPANY
Project/Site: [none]

TestAmerica Job ID: CUJ1113

Client Sample ID: AL SB-31 (0-3') 10/07/2011 (Continued) — Lab Sample ID: CUJ1113-20

Analyte	Result	Qualifier	RL	MDL	Unit	Dil Fac	D	Method	Prep Type
Mercury	0.611		0.0434		mg/kg dry	2.00	☼	SW 7471B	Total
Barium	254		1.63		mg/kg dry	3.00	☼	SW 6010C	Total
Chromium	43.9		3.25		mg/kg dry	3.00	☼	SW 6010C	Total
Lead	857		16.3		mg/kg dry	3.00	☼	SW 6010C	Total

Detection Summary

Client: ALFRED BENESCH & COMPANY
Project/Site: [none]

TestAmerica Job ID: CUJ1114

Client Sample ID: AL SB-32 (0-3') 10/07/2011 — Lab Sample ID: CUJ1114-01

Analyte	Result	Qualifier	RL	MDL	Unit	Dil Fac	D	Method	Prep Type
PCB-1242	3920		1310		ug/kg dry	20.0	☼	SW 8082A	Total

Client Sample ID: AL SB-33 (0-3') 10/07/2011 — Lab Sample ID: CUJ1114-02

Analyte	Result	Qualifier	RL	MDL	Unit	Dil Fac	D	Method	Prep Type
n-Butylbenzene	220		23.7		ug/kg dry	1.00	☼	SW 8260B	Total
sec-Butylbenzene	114		23.7		ug/kg dry	1.00	☼	SW 8260B	Total
Ethylbenzene	35.0		23.7		ug/kg dry	1.00	☼	SW 8260B	Total
Isopropylbenzene	48.0		23.7		ug/kg dry	1.00	☼	SW 8260B	Total
p-Isopropyltoluene	105		23.7		ug/kg dry	1.00	☼	SW 8260B	Total
n-Propylbenzene	103		23.7		ug/kg dry	1.00	☼	SW 8260B	Total
1,2,4-Trimethylbenzene	68.9		23.7		ug/kg dry	1.00	☼	SW 8260B	Total
1,3,5-Trimethylbenzene	48.0		23.7		ug/kg dry	1.00	☼	SW 8260B	Total
Xylenes, total	93.8		71.1		ug/kg dry	1.00	☼	SW 8260B	Total
PCB-1242	8890		1380		ug/kg dry	20.0	☼	SW 8082A	Total

Client Sample ID: AL SB-35 (3-6') 10/07/2011 — Lab Sample ID: CUJ1114-03

Analyte	Result	Qualifier	RL	MDL	Unit	Dil Fac	D	Method	Prep Type
cis-1,2-Dichloroethene	887		261		ug/kg dry	100	☼	SW 8260B	Total
Ethylbenzene	408		261		ug/kg dry	100	☼	SW 8260B	Total
Toluene	11400		261		ug/kg dry	100	☼	SW 8260B	Total
1,2,4-Trimethylbenzene	531		261		ug/kg dry	100	☼	SW 8260B	Total
Xylenes, total	1700		783		ug/kg dry	100	☼	SW 8260B	Total
Cresol(s) - RE1	162000		32900		ug/kg dry	10.0	☼	SW 8270D	Total
4-Methylphenol (p-Cresol) - RE1	162000		32900		ug/kg dry	10.0	☼	SW 8270D	Total

Client Sample ID: AL SB-36 (0-3') 10/07/2011 — Lab Sample ID: CUJ1114-04

Analyte	Result	Qualifier	RL	MDL	Unit	Dil Fac	D	Method	Prep Type
Mercury	0.784		0.119		mg/kg dry	5.00	☼	SW 7471B	Total
Barium	221		1.79		mg/kg dry	3.00	☼	SW 6010C	Total
Cadmium	3.65		3.58		mg/kg dry	3.00	☼	SW 6010C	Total
Chromium	34.6		3.58		mg/kg dry	3.00	☼	SW 6010C	Total
Lead	602		17.9		mg/kg dry	3.00	☼	SW 6010C	Total

Client Sample ID: AL SB-36 (3-6') 10/07/2011 — Lab Sample ID: CUJ1114-05

Analyte	Result	Qualifier	RL	MDL	Unit	Dil Fac	D	Method	Prep Type
PCB-1242	1790		583		ug/kg dry	10.0	☼	SW 8082A	Total

Client Sample ID: AL SB-37 (0-3') 10/07/2011 — Lab Sample ID: CUJ1114-06

Analyte	Result	Qualifier	RL	MDL	Unit	Dil Fac	D	Method	Prep Type
PCB-1242	8340		1330		ug/kg dry	20.0	☼	SW 8082A	Total

Client Sample ID: AL SB-37 (3-6') 10/07/2011 — Lab Sample ID: CUJ1114-07

Analyte	Result	Qualifier	RL	MDL	Unit	Dil Fac	D	Method	Prep Type
PCB-1242	289		70.1		ug/kg dry	1.00	☼	SW 8082A	Total

Client Sample ID: AL SB-39 (0-3') 10/07/2011 — Lab Sample ID: CUJ1114-08

Exhibit A

Detection Summary

Client: ALFRED BENESCH & COMPANY
Project/Site: [none]

TestAmerica Job ID: CUJ1114

Client Sample ID: AL SB-39 (0-3') 10/07/2011 (Continued) — Lab Sample ID: CUJ1114-08

Analyte	Result	Qualifier	RL	MDL	Unit	Dil Fac	D	Method	Prep Type
Mercury	1.97		0.102		mg/kg dry	5.00	☼	SW 7471B	Total
Barium	275		1.69		mg/kg dry	3.00	☼	SW 6010C	Total
Cadmium	4.14		3.38		mg/kg dry	3.00	☼	SW 6010C	Total
Chromium	39.3		3.38		mg/kg dry	3.00	☼	SW 6010C	Total
Lead	1590		16.9		mg/kg dry	3.00	☼	SW 6010C	Total

Client Sample ID: AL SB-40 (3-6') 10/07/2011 — Lab Sample ID: CUJ1114-09

No Detections

Client Sample ID: AL SB-43 (0-3') 10/07/2011 — Lab Sample ID: CUJ1114-10

Analyte	Result	Qualifier	RL	MDL	Unit	Dil Fac	D	Method	Prep Type
Acetone	529		233		ug/kg dry	1.00	☼	SW 8260B	Total
p-Isopropyltoluene	169		23.3		ug/kg dry	1.00	☼	SW 8260B	Total
Naphthalene	537	CIN	116		ug/kg dry	1.00	☼	SW 8260B	Total
1,3,5-Trimethylbenzene	102		23.3		ug/kg dry	1.00	☼	SW 8260B	Total

Client Sample ID: AL SB-43 (3-6') 10/07/2011 — Lab Sample ID: CUJ1114-11

Analyte	Result	Qualifier	RL	MDL	Unit	Dil Fac	D	Method	Prep Type
PCB-1254	1140		342		ug/kg dry	5.00	☼	SW 8082A	Total

Client Sample ID: AL SB-44 (0-3') 10/07/2011 — Lab Sample ID: CUJ1114-12

Analyte	Result	Qualifier	RL	MDL	Unit	Dil Fac	D	Method	Prep Type
1,2,4-Trimethylbenzene	62.0		20.6		ug/kg dry	1.00	☼	SW 8260B	Total
Xylenes, total	72.2		61.7		ug/kg dry	1.00	☼	SW 8260B	Total
Mercury	1.12		0.113		mg/kg dry	5.00	☼	SW 7471B	Total
Barium	281		1.69		mg/kg dry	3.00	☼	SW 6010C	Total
Cadmium	7.03		3.38		mg/kg dry	3.00	☼	SW 6010C	Total
Chromium	307		3.38		mg/kg dry	3.00	☼	SW 6010C	Total
Lead	1470		16.9		mg/kg dry	3.00	☼	SW 6010C	Total
Silver	70.4		3.38		mg/kg dry	3.00	☼	SW 6010C	Total

Client Sample ID: AL SB-44 (3-6') 10/07/2011 — Lab Sample ID: CUJ1114-13

Analyte	Result	Qualifier	RL	MDL	Unit	Dil Fac	D	Method	Prep Type
1,2,4-Trimethylbenzene	286		262		ug/kg dry	100	☼	SW 8260B	Total

Exhibit A

Detection Summary

Client: ALFRED BENESCH & COMPANY
Project/Site: [none]

TestAmerica Job ID: CUJ1116

Client Sample ID: AL SB-47 (0-3') 10/08/2011 — Lab Sample ID: CUJ1116-01

Analyte	Result	Qualifier	RL	MDL	Unit	Dil Fac	D	Method	Prep Type
PCB-1242	10700		2650		ug/kg dry	40.0	☼	SW 8082A	Total

Client Sample ID: AL SB-48 (3-6') 10/08/2011 — Lab Sample ID: CUJ1116-02

Analyte	Result	Qualifier	RL	MDL	Unit	Dil Fac	D	Method	Prep Type
PCB-1242	1380		343		ug/kg dry	5.00	☼	SW 8082A	Total

Client Sample ID: AL SB-50 (0-3') 10/07/2011 — Lab Sample ID: CUJ1116-03

Analyte	Result	Qualifier	RL	MDL	Unit	Dil Fac	D	Method	Prep Type
Mercury	1.79		0.113		mg/kg dry	5.00	☼	SW 7471B	Total
Arsenic	14.8		13.6		mg/kg dry	3.00	☼	SW 6010C	Total
Barium	734		1.70		mg/kg dry	3.00	☼	SW 6010C	Total
Cadmium	8.38		3.40		mg/kg dry	3.00	☼	SW 6010C	Total
Chromium	175		3.40		mg/kg dry	3.00	☼	SW 6010C	Total
Lead	1780		17.0		mg/kg dry	3.00	☼	SW 6010C	Total

Client Sample ID: AL SB-51 (0-3') 10/07/2011 — Lab Sample ID: CUJ1116-04

Analyte	Result	Qualifier	RL	MDL	Unit	Dil Fac	D	Method	Prep Type
PCB-1242	8720		1360		ug/kg dry	20.0	☼	SW 8082A	Total

Client Sample ID: AL SB-53 (3-6') 10/08/2011 — Lab Sample ID: CUJ1116-05

Analyte	Result	Qualifier	RL	MDL	Unit	Dil Fac	D	Method	Prep Type
PCB-1242	100000		68100		ug/kg dry	1000	☼	SW 8082A	Total

Client Sample ID: AL SB-55 (0-3') 10/06/2011 — Lab Sample ID: CUJ1116-06

Analyte	Result	Qualifier	RL	MDL	Unit	Dil Fac	D	Method	Prep Type
n-Butylbenzene	30.1	H2	21.8		ug/kg dry	1.00	☼	SW 8260B	Total
Ethylbenzene	150	H2	21.8		ug/kg dry	1.00	☼	SW 8260B	Total
n-Propylbenzene	26.5	H2	21.8		ug/kg dry	1.00	☼	SW 8260B	Total
Toluene	96.5	H2	21.8		ug/kg dry	1.00	☼	SW 8260B	Total
1,2,4-Trimethylbenzene	284	H2	21.8		ug/kg dry	1.00	☼	SW 8260B	Total
Xylenes, total	1100	H2 M1	65.5		ug/kg dry	1.00	☼	SW 8260B	Total
Mercury	2.35		0.115		mg/kg dry	5.00	☼	SW 7471B	Total
Arsenic	21.4		13.8		mg/kg dry	3.00	☼	SW 6010C	Total
Barium	302		1.73		mg/kg dry	3.00	☼	SW 6010C	Total
Cadmium	4.85		3.45		mg/kg dry	3.00	☼	SW 6010C	Total
Chromium	98.8		3.45		mg/kg dry	3.00	☼	SW 6010C	Total
Lead	1120		17.3		mg/kg dry	3.00	☼	SW 6010C	Total

Client Sample ID: AL SB-58 (0-3') 10/06/2011 — Lab Sample ID: CUJ1116-07

Analyte	Result	Qualifier	RL	MDL	Unit	Dil Fac	D	Method	Prep Type
Mercury	1.07		0.107		mg/kg dry	5.00	☼	SW 7471B	Total
Arsenic	23.4	M1	14.2		mg/kg dry	3.00	☼	SW 6010C	Total
Barium	176		1.77		mg/kg dry	3.00	☼	SW 6010C	Total
Chromium	15.2		3.55		mg/kg dry	3.00	☼	SW 6010C	Total
Lead	101		17.7		mg/kg dry	3.00	☼	SW 6010C	Total

Exhibit A

Detection Summary

Client: ALFRED BENESCH & COMPANY
Project/Site: [none]

TestAmerica Job ID: CUJ1116

Client Sample ID: AL SB-58 (3-6') 10/06/2011 — Lab Sample ID: CUJ1116-08

No Detections

Client Sample ID: AL SB-59 (0-3') 10/06/2011 — Lab Sample ID: CUJ1116-09

Analyte	Result	Qualifier	RL	MDL	Unit	Dil Fac	D	Method	Prep Type
PCB-1254	865		346		ug/kg dry	5.00	☼	SW 8082A	Total

Client Sample ID: AL SB-60 (0-3') 10/08/2011 — Lab Sample ID: CUJ1116-10

Analyte	Result	Qualifier	RL	MDL	Unit	Dil Fac	D	Method	Prep Type
Acetone	508	L1 S2	244		ug/kg dry	1.00	☼	SW 8260B	Total
PCB-1242	9710		1580		ug/kg dry	20.0	☼	SW 8082A	Total

Client Sample ID: AL SB-62 (0-3') 10/07/2011 — Lab Sample ID: CUJ1116-11

Analyte	Result	Qualifier	RL	MDL	Unit	Dil Fac	D	Method	Prep Type
Mercury	0.0538		0.0269		mg/kg dry	1.00	☼	SW 7471B	Total
Arsenic	20.1	R	16.2		mg/kg dry	3.00	☼	SW 6010C	Total
Barium	288		2.02		mg/kg dry	3.00	☼	SW 6010C	Total
Chromium	23.7		4.04		mg/kg dry	3.00	☼	SW 6010C	Total
Lead	194		20.2		mg/kg dry	3.00	☼	SW 6010C	Total

Client Sample ID: AL-DUP-VOA1 — Lab Sample ID: CUJ1116-12

Analyte	Result	Qualifier	RL	MDL	Unit	Dil Fac	D	Method	Prep Type
1,2,4-Trimethylbenzene	57.0		23.1		ug/kg dry	1.00	☼	SW 8260B	Total

Client Sample ID: AL-DUP-Metal-1 — Lab Sample ID: CUJ1116-13

Analyte	Result	Qualifier	RL	MDL	Unit	Dil Fac	D	Method	Prep Type
Mercury	0.886		0.120		mg/kg dry	5.00	☼	SW 7471B	Total
Barium	398		1.81		mg/kg dry	3.00	☼	SW 6010C	Total
Chromium	65.0		3.61		mg/kg dry	3.00	☼	SW 6010C	Total
Lead	717		18.1		mg/kg dry	3.00	☼	SW 6010C	Total

Client Sample ID: AL-DUP-Metal-2 — Lab Sample ID: CUJ1116-14

Analyte	Result	Qualifier	RL	MDL	Unit	Dil Fac	D	Method	Prep Type
Mercury	1.05		0.114		mg/kg dry	5.00	☼	SW 7471B	Total
Barium	275		1.71		mg/kg dry	3.00	☼	SW 6010C	Total
Cadmium	6.22		3.42		mg/kg dry	3.00	☼	SW 6010C	Total
Chromium	57.2		3.42		mg/kg dry	3.00	☼	SW 6010C	Total
Lead	1230		17.1		mg/kg dry	3.00	☼	SW 6010C	Total

Exhibit A

Detection Summary

Client: ALFRED BENESCH & COMPANY
Project/Site: [none]

TestAmerica Job ID: CUJ1287

Client Sample ID: AL-DUP-PCB 1 10/08/11 — Lab Sample ID: CUJ1287-01

Analyte	Result	Qualifier	RL	MDL	Unit	Dil Fac	D	Method	Prep Type
PCB-1242	353000		63700		ug/kg dry	1000	☼	SW 8082A	Total

Client Sample ID: AL-DUP-PCB 2 10/08/11 — Lab Sample ID: CUJ1287-02

Analyte	Result	Qualifier	RL	MDL	Unit	Dil Fac	D	Method	Prep Type
PCB-1242	4270		1510		ug/kg dry	20.0	☼	SW 8082A	Total

Detection Summary

Client: ALFRED BENESCH & COMPANY
Project/Site: [none]

TestAmerica Job ID: CUJ1875

Client Sample ID: AL SB-14 (0-3') 10/08/2011 — Lab Sample ID: CUJ1875-01

Analyte	Result	Qualifier	RL	MDL	Unit	Dil Fac	D	Method	Prep Type
TCLP Extraction Temp. Minimum	21.0				°C	1.00		SW 1311	TCLP
TCLP Extraction Temp. Maximum	24.0				°C	1.00		SW 1311	TCLP

Client Sample ID: AL SB-22 (0-3') 10/08/2011 — Lab Sample ID: CUJ1875-02

Analyte	Result	Qualifier	RL	MDL	Unit	Dil Fac	D	Method	Prep Type
Lead	0.248		0.100		mg/L	1.00		SW 6010B	TCLP
TCLP Extraction Temp. Minimum	21.0				°C	1.00		SW 1311	TCLP
TCLP Extraction Temp. Maximum	24.0				°C	1.00		SW 1311	TCLP

Client Sample ID: AL SB-44 (0-3') 10/08/2011 — Lab Sample ID: CUJ1875-03

Analyte	Result	Qualifier	RL	MDL	Unit	Dil Fac	D	Method	Prep Type
Lead	0.114		0.100		mg/L	1.00		SW 6010B	TCLP
TCLP Extraction Temp. Minimum	21.0				°C	1.00		SW 1311	TCLP
TCLP Extraction Temp. Maximum	24.0				°C	1.00		SW 1311	TCLP

Client Sample ID: AL SB-50 (0-3') 10/08/2011 — Lab Sample ID: CUJ1875-04

Analyte	Result	Qualifier	RL	MDL	Unit	Dil Fac	D	Method	Prep Type
Lead	0.208		0.100		mg/L	1.00		SW 6010B	TCLP
TCLP Extraction Temp. Minimum	21.0				°C	1.00		SW 1311	TCLP
TCLP Extraction Temp. Maximum	24.0				°C	1.00		SW 1311	TCLP

The following information is to be submitted with your bid. Attach your response to the Response Attachment Section of your E-Bid.

A. List of proposed subcontractors

B. Qualifications of proposed subcontractor

C. Detailed schedule (preferable by trade or specification section)

D. Confirmation of railroad liability insurance (provide carrier name)

E. Staffing plan with estimated hours for each person (prime or lead contractor)

F. Qualifications and background of Project Manager

G. Past project references with contact information

H. Similar project experience information

I. History of company/financial stability and ability to complete this project on time and on budget (current workload and availability of key staff)

J. Confirm that bid contains all construction contingency costs.

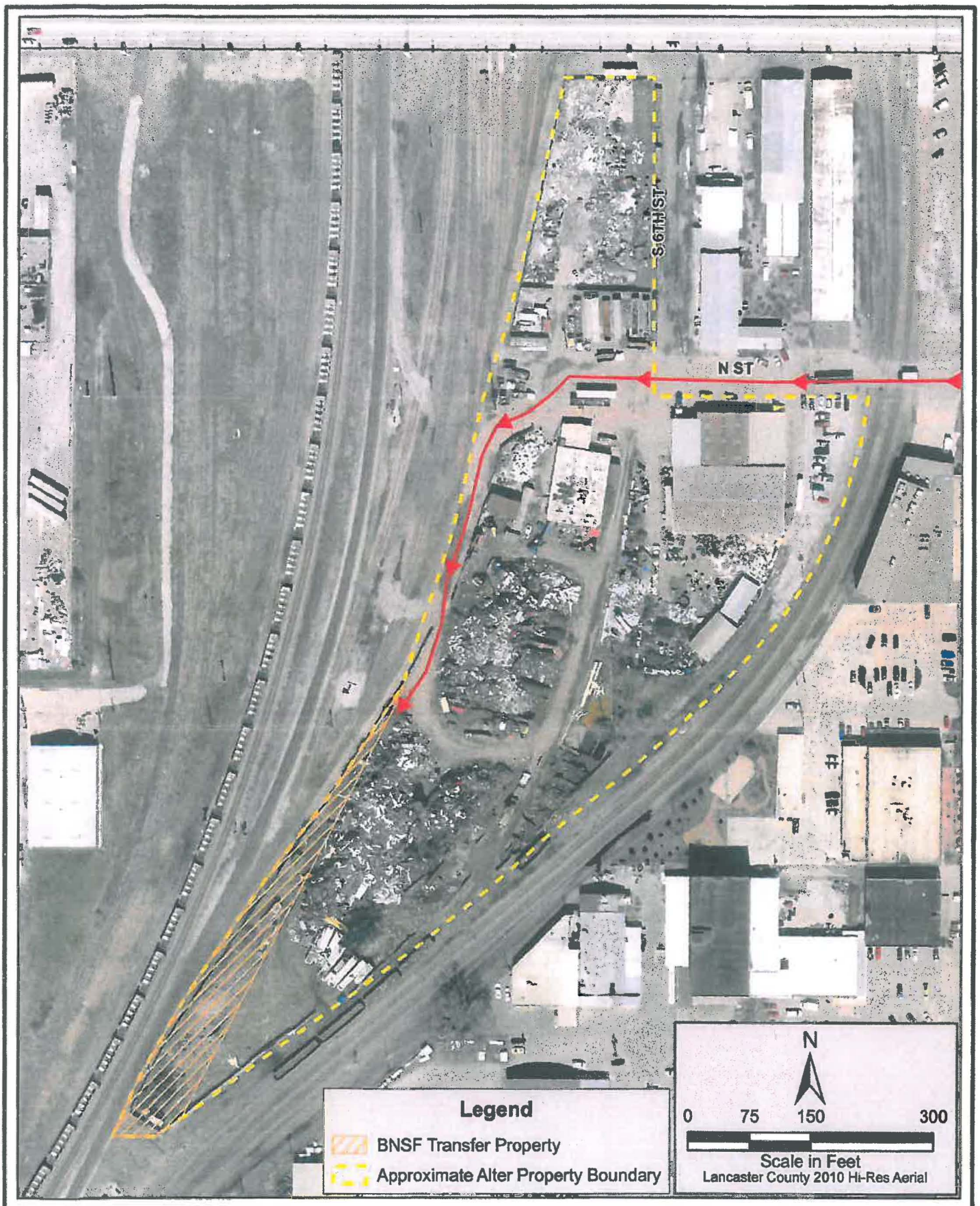

PROJECT: 010-1633	BNSF TRANSFER PROPERTY LINCOLN, NEBRASKA	OLSSON ASSOCIATES 1111 Lincoln Mall Suite 111 P O Box 84608 Lincoln, NE 68501-4608 TEL 402 474 6311 FAX 402 474 5160 www.olssonassociates.com	FIGURE
DRAWN BY: RD			1
DATE: NDecember 3, 2011			

F:\Projects\010-1633_GOHY\gis\Final Alter Maps.mxd

Exhibit A

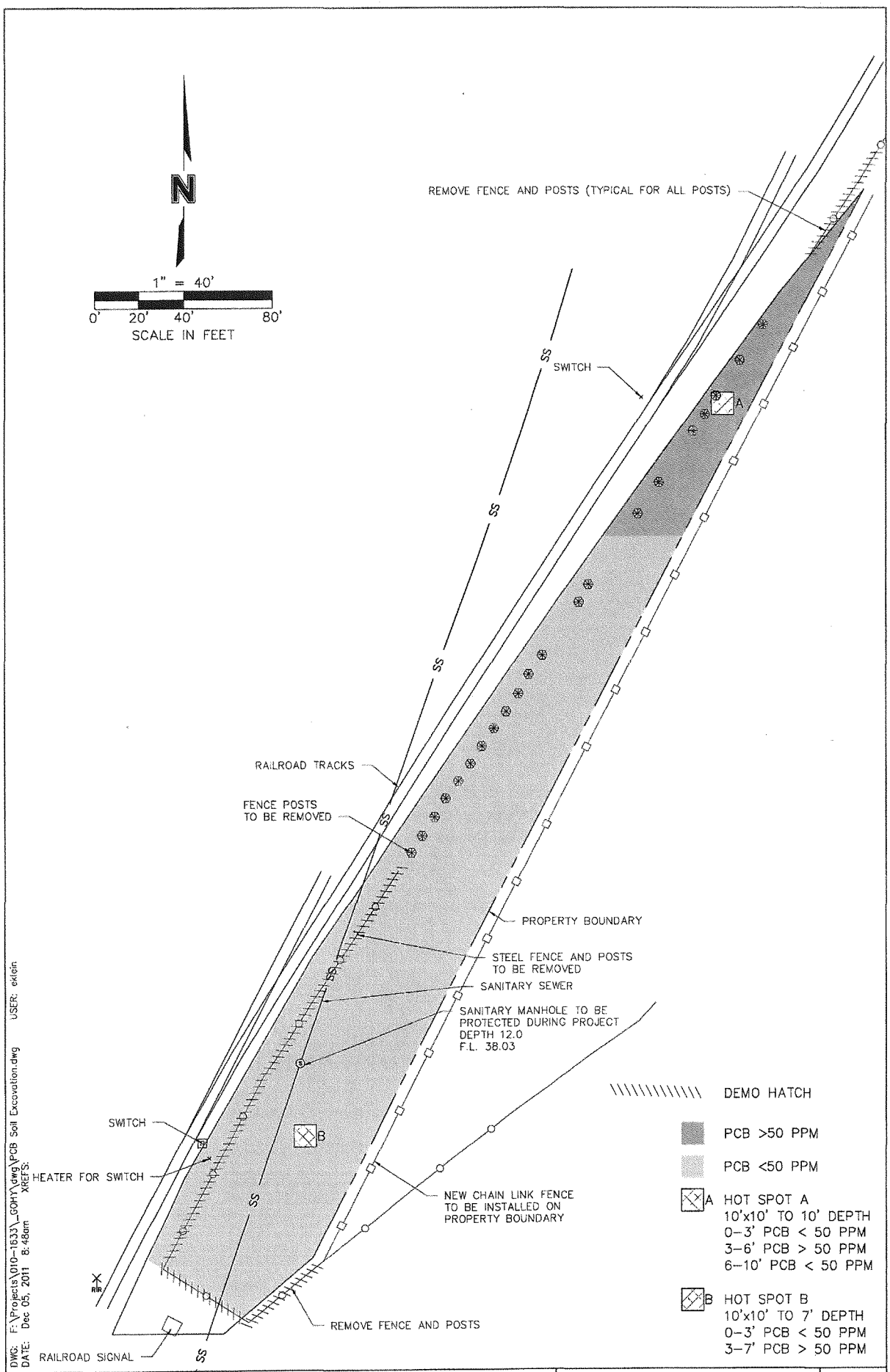

DWG: F:\Projects\010-1633_GOHY\dwg\PCB Soil Excavation.dwg USER: eklein
DATE: Dec 05, 2011 8:48am XREFS:

PROJECT NO: 010-1633	BNSF TRANSFER PROPERTY LINCOLN, NEBRASKA	OLSSON ASSOCIATES	FIGURE
DRAWN BY: RWD		1111 Lincoln Mall, Suite 111 P.O. Box 84608 Lincoln, NE 68501-4608 TEL 402.474.6311 FAX 402.474.5160	2
DATE: 12/5/11			

Exhibit A

Addendum #1
Alter Sliver Remediation for
West Haymarket JPA
Bid No. 11-268

Addenda are instruments issued by the City prior to the date for receipt of offers which will modify or interpret the specification document by addition, deletion, clarification or correction.

Please acknowledge receipt of this addendum in the space provided in the Attribute Section.

Be advised of the following changes and clarifications to the City's specification and bidding documents:

1. **A pre-bid conference will be held Wednesday, December 14, 2011 at 2:00 p.m. in the Purchasing Office, 440 So. 8th St., Suite 200, Lincoln, NE. All interested contractors are strongly encouraged to attend.**

2. **BNSF Requirements have been attached to this addendum.**

3. **When responding to Attachment B, also include in your response what your experience with PCB clean-up and give examples of such.**

All other terms and conditions shall remain unchanged.

Dated this 8th day of December, 2011.

Vince M. Mejer
Purchasing Agent

Exhibit A

Figure 04100-1

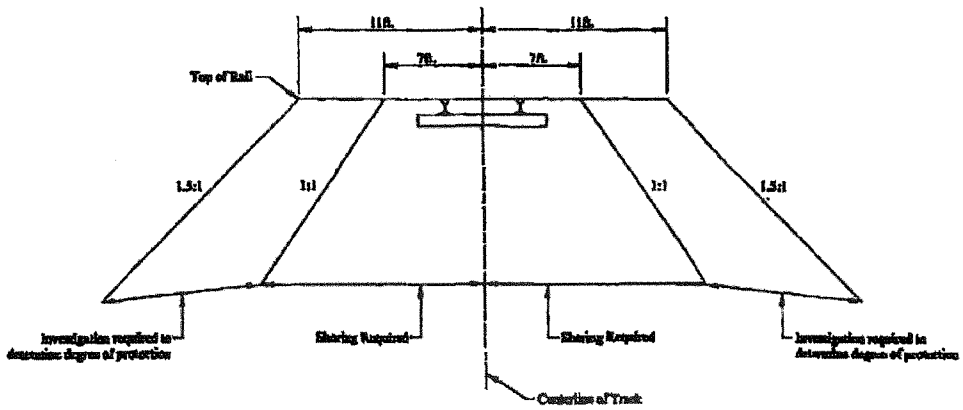

Zone of Influence

2. Protective shoring shall be designed and constructed, in accordance with the Engineer's approval. Removal of protective shoring shall be in accordance with the project plans and the Engineer's approval.

3. Protective shoring shall be constructed of engineered structural components consisting of timber, standard steel sheet pile sections, structural steel sections, cylindrical metal shells or combination of the above.

4. The Contractor shall submit drawings and design calculations showing the proposed design, method of construction, removal, as well as other details left open to choice and not fully detailed on the plans. These drawings and design computations, stamped by a licensed professional or structural engineer in the state where the work is to be done, shall be submitted to the Engineer and approved prior to the start of construction. This approval shall not relieve the Contractor of responsibility for the protective shoring.

5. Design of protective shoring shall consider Cooper E 80 live load surcharge for excavations adjacent to railroad tracks. Refer to the AREMA Manual for Railway Engineering, Chapter 8, Part 20 for methods to determine lateral pressure values for railroad surcharge loading.

6. A safety factor of one and one half (1.5) shall be used in the design of temporary protective shoring. A safety factor of two (2.0) shall be used in the design of permanent protective shoring.

Addendum #2
Alter Sliver Remediation for
West Haymarket JPA
Bid No. 11-268

Addenda are instruments issued by the City prior to the date for receipt of offers which will modify or interpret the specification document by addition, deletion, clarification or correction. Please acknowledge receipt of this addendum in the space provided in the Attribute Section. Be advised of the following changes and clarifications to the City's specification and bidding documents:

1. The BNSF Guidelines for Temporary Shoring (10-25-04) and the General Shoring Requirements dated 5-6-03 shall be applied to determine the proper shoring requirements for the project (Attachment 1). A copy of the General Shoring requirements was provided to each bidder in attendance at the Pre-Bid Meeting on December 14, 2011.
2. Contractor shall supply a cost for shoring compliant with the BNSF General Shoring Requirements dated 5-6-03 for Zone A and for Zone B.
3. The Bid Proposal Sheet is amended to reflect changes as discussed during the Pre-Bid meeting on December 14, 2011(Attachment 2).
4. Contractor must comply with City of Lincoln Standard Specification Chapter 2-Earthwork, 2.11-Cold Weather Construction and with BNSF Embankment requirements regarding frozen soil. All costs associated with this specification are subsidiary to Soil Replacement and Compaction (bid item 11).
5. City of Lincoln General Provisions and Requirements, Chapter 2 Earthwork, Article 2.08 Embankment (A) - Replace paragraph 5 of the specification with BNSF Geotechnical Requirements for Embankment and Subgrade Construction (Attachment 3).
6. Additional Contact Information:

   Clean Harbors- Robert Neuman 312-402-5356

All other terms and conditions shall remain unchanged.
Dated this 16th day of December, 2011.
Vince M. Mejer
Purchasing Agent

Attachment #1

BNSF Guidelines for Temporary Shoring (10-25-04)

BNSF General Shoring Requirements (5-6-03)

GUIDELINES FOR TEMPORARY SHORING

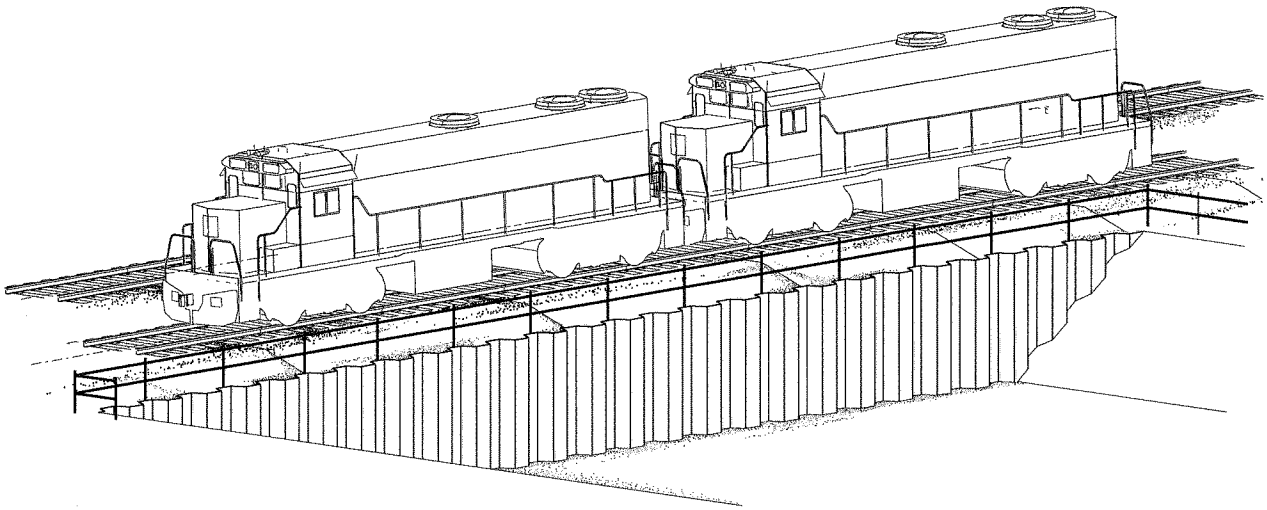

"CALL BEFORE YOU DIG!"
1-800-533-2891

ASSISTANT DIRECTOR STRUCTURE DESIGN
4515 KANSAS AVE
KANSAS CITY, KS 66106-1124

BUILDING AMERICA℠

"CALL BEFORE YOU DIG!"
1-800-336-9193

OFFICE AVP ENGINEERING - DESIGN
1400 DOUGLAS ST. STOP 0910
OMAHA, NE 68179-0910

GUIDELINES FOR TEMPORARY SHORING Published October 25, 2004

Exhibit A

INDEX

SECTION		PAGE
1.	SCOPE	1
2.	GENERAL CRITERIA	1
3.	CONTRACTOR RESPONSIBILITIES	2
4.	INFORMATION REQUIRED	3
5.	TYPES OF TEMPORARY SHORING	5
6.	GENERAL SHORING REQUIREMENTS	5
7.	COMPUTATION OF APPLIED FORCES	7
8.	STRUCTURAL INTEGRITY	9
9.	SOIL CHARACTERISTICS	10
10.	PLANS	11
11.	SUBMITTALS	13
12.	APPENDIX	14
13.	BIBLIOGRAPHY	14

GUIDELINES FOR TEMPORARY SHORING

1. SCOPE

The scope of these guidelines is to inform public agencies, design engineers, contractors and inspectors of current Railroad standards and requirements concerning design and construction of temporary shoring.

1. The term **Railroad** refers to the Burlington Northern & Santa Fe Railway (BNSF) and/or the Union Pacific Railroad (UPRR). The term **Contractor** is defined as any party gaining access to work on Railroad right-of-way or other Railroad operating locations.

2. These guidelines are provided as a reference and may not be taken as authority to construct without prior review and written approval of the Railroad. These guidelines supersede all previous guidelines for temporary shoring and are subject to revision without notice.

3. These guidelines supplement the current, American Railway Engineering and Maintenance-of-Way Association (AREMA) Manual of Recommended Practice. The 2002 AREMA Manual was utilized in developing this guideline. The AREMA Manual is available from:

   American Railway Engineering and Maintenance-of-Way Association
   8201 Corporate Drive, Suite 1125
   Landover, MD 20785-2230
   Phone: (301) 459-3200
   FAX: (301) 459-8077
   www.arema.org

4. The specific requirements for temporary shoring addressed in this document shall be followed for all locations where the Railroad operates, regardless of track ownership.

5. Any items not covered specifically herein shall be in accordance with the AREMA Manual and subject to the review and approval of the Railroad. Where conflicts exist, the most stringent specification should be applied.

6. All excavations shall also be governed by Railroad requirements, Federal, State and Local laws, rules, and regulations concerning construction safety.

7. Safe rail operations shall be required for the duration of the project. All personnel, railroad tracks and property shall be protected at all times.

8. To expedite the review process of the temporary shoring plans, drawings submitted by the Contractors are required to adhere to the project specifications, AREMA and other Railroad requirements.

2. GENERAL CRITERIA

The Contractor must not begin construction of any component of the shoring system affecting the Railroad right-of-way until written Railroad approval has been received.

1. All excavations shall be in compliance with applicable OSHA regulations and shall be shored where there is any danger to tracks, structures or personnel regardless of depth.

2. The Contractor is responsible for planning and executing all procedures necessary to construct, maintain and remove the temporary shoring system in a safe and controlled manner.

3. Emergency Railroad phone numbers are to be obtained from the Railroad representative in charge of the project prior to the start of any work and shall be posted at the job site.

4. The Contractor must obtain a valid right of entry permit from the Railroad and comply with all Railroad requirements when working on Railroad property.

5. The Contractor is required to meet minimum safety standards as defined by the Railroad.

6. All temporary shoring systems that support or impact the Railroad's tracks or operations shall be designed and constructed to provide safe and adequate rigidity.

7. The Railroad requirements, construction submittal review times and review criteria should be discussed at the pre-construction meeting with the Contractor.

8. A flagman is required when any work is performed within 25 feet of track centerline. If the Railroad provides flagging or other services, the Contractor shall not be relieved of any responsibilities or liabilities as set forth in any document authorizing the work. No work is allowed within 50 feet of track centerline when a train passes the work site and all personnel must clear the area within 25 feet of track centerline and secure all equipment when trains are present.

9. Appropriate measures for the installation and protection of fiber optic cables shall be addressed in the plans and contract documents. For specific Railroad requirements and additional information refer to:

   www.bnsf.com or call 1-800-533-2891.

   www.uprr.com, call 1-800-336-9193 or refer to UPRR Fiber Optic Engineering, Construction and Maintenance Standards.

10. Relocation of utilities or communication lines not owned by the Railroad shall be coordinated with the utility owners. The utility relocation plans must then be submitted to the Railroad utility representative for approval. The shoring plans must include the correct contact for the Railroad, State or Local utility locating service provider. The Railroad will not be responsible for cost associated with any utility, signal, or communication line relocation or adjustments.

3. CONTRACTOR RESPONSIBILITIES

The Contractor shall be solely responsible for the design, construction and performance of the temporary structure. **(AREMA 8.28.1.3)**

1. The Contractor's work shall in no way impede the train operations of the Railroad and must be coordinated with the local Railroad operating department.

2. The Contractor shall develop a work plan that enables the track(s) to remain open to train traffic at all times.

3. The Contractor shall comply with all State and Federal Laws, county or municipal ordinances and regulations which in any manner affect the work.

4. All removed soils will become the responsibility of the Contractor and shall be disposed of outside the Railroad right-of-way according to the applicable Federal, State and Local regulations.

5. The Project Engineer and the Contractor shall evaluate the quality of materials furnished and work performed.

6. The Contractor is responsible to protect the Railroad ballast and subballast from contamination.

7. The Contractor must monitor and record top of rail elevations and track alignment for the duration of the project. The movement shall be within the limits defined in **Table 1, Deflection Criteria** on page 10. Displacements exceeding the limits defined in **Table 1** must be immediately reported to the Railroad. All work on the project must stop and the Railroad may take any action necessary to ensure safe passage of trains. The Contractor must immediately submit a corrective action plan to the Railroad for review and approval. The Railroad must review and approve the proposed repair procedure. The repair must be inspected by the Railroad before the track can be placed back in service.

8. Any damage to Railroad property such as track, signal equipment or structure could result in a train derailment. All damage must be reported immediately to the Railroad representative in charge of the project and to the Railroad Manager of Track Maintenance (MTM).

4. INFORMATION REQUIRED

Plans and calculations shall be submitted, signed and stamped by a Registered Professional Engineer familiar with Railroad loadings and who is licensed in the state where the shoring system is intended for use. Shoring design plans and calculations shall be in English units. If Metric units are used, all controlling dimensions, elevations, design criteria assumptions, and material stresses shall be expressed in dual units, with English units to be in parentheses. Information shall be assembled concerning right-of-way boundary, clearances, proposed grades of tracks and roads, and all other factors that may influence the controlling dimensions of the proposed shoring system. See section 10 for additional requirements.

1. Field Survey.

   Sufficient information shall be shown on the plans in the form of profiles, cross sections and topographical maps to determine general design and structural requirements. Field survey information of critical or key dimensions shall be referenced to the centerline of track(s) and top of rail elevations. Existing and proposed grades and alignment of tracks and roads shall be indicated together with a record of controlling elevation of water surfaces or ground water. Show the location of existing/proposed utilities and construction history of the area which might hamper proper installation of the piling, soldier beams, or ground anchors.

2. Geotechnical Report shall provide:
   a. Elevation and location of soil boring in reference to the track(s) centerline and top of rail elevations.
   b. Classification of all soils encountered.
   c. Internal angle of soil friction.
   d. Dry and wet unit weights of soil.
   e. Active and passive soil coefficients, pressure diagram for multiple soil strata.
   f. Bearing capacity and unconfined compression strength of soil.
   g. Backfill and compaction recommendations.
   h. Optimum moisture content of fill material.
   i. Maximum density of fill material.
   j. Minimum recommended factor of safety.
   k. Water table elevation on both sides of the shoring system.
   l. Dewatering wells and proposed flownets or zones of influence.
   m. In seismic areas, evaluation of liquefaction potential of various soil strata.

3. Loads.

All design criteria, temporary and permanent loading must be clearly stated in the design calculations and on the contract and record plans. Temporary loads include, but are not limited to: construction equipment, construction materials and lower water levels adjoining the bulkhead causing unbalanced hydrostatic pressure. Permanent loads include, but are not limited to: future grading and paving, Railroads or highways, structures, material storage piles, snow and earthquake. The allowable live load after construction should be clearly shown in the plans and painted on the pavements behind the bulkheads or shown on signs at the site and also recorded on the record plans. Some of the loads are:

a. Live load pressure due to E80 loading for track parallel to shoring system.
b. Live load pressure due to E80 loading for track at right angle to shoring system.
c. Other live loads.
d. Active earth pressure due to soil.
e. Passive earth pressure due to soil.
f. Active earth pressure due to surcharge loads.
g. Active pressure due to sloped embankment.
h. Dead load.
i. Buoyancy.
j. Longitudinal force from live load.
k. Centrifugal forces.
l. Shrinkage.
m. Temperature.
n. Earthquake.
o. Stream flow pressure.
p. Ice pressure.

4. Drainage. **(AREMA 8.20.2.4)**

   a. The drainage pattern of the site before and after construction should be analyzed and adequate drainage provisions should be incorporated into the plans and specifications. Consideration should be given to groundwater as well as surface drainage.

   b. Drainage provisions for backfill should be compatible with the assumed water conditions in design.

5. Structural design calculations.

   a. List all assumptions used to design the temporary shoring system.

   b. Determine E80 live load lateral pressure using the Boussinesq strip load equation. See **Figure 2** which illustrates Plan Number **710001 "LIVE LOAD PRESSURE DUE TO COOPER E80**".

   c. Computerized calculations and programs must clearly indicate the input and output data. List all equations used in determining the output.

   d. Example calculations with values must be provided to support computerized output and match the calculated computer result.

   e. Provide a simple free body diagram showing all controlling dimensions and applied loads on the temporary shoring system.

   f. Calculated lateral deflections of the shoring and effects to the rail system must be included. See section 8, Part 6. Include the elastic deflection of the wall as well as the deflection due to the passive deflection of the resisting soil mass.

   g. Documents and manufacturer's recommendations which support the design assumptions must be included with the calculations.

5. TYPES OF TEMPORARY SHORING

1. A shoring box is a prefabricated shoring system which is installed as the excavation progresses. This shoring system is not accepted by the Railroad. This system is allowed in special applications only, typically where Railroad live load surcharge is not present. The shoring box is moved down into the excavation by gravity or by applying vertical loading from excavation equipment.
2. Anchored systems with tiebacks are discouraged. The tiebacks will be an obstruction to future utility installations and may also damage existing utilities. Tiebacks must be removed per Railroad direction. Removal of tieback assemblies is problematic.
3. An anchored sheet pile wall is a structure designed to provide lateral support for a soil mass and derives stability from passive resistance of the soil in which the sheet pile is embedded and the tensile resistance of the anchors.
    a. For purposes of these guidelines, ground anchors shall be cement-grouted tiebacks designed, furnished, installed, tested and stressed in accordance with the project specifications and AREMA requirements.
4. An anchored soldier beam with lagging wall is a structure designed to provide lateral support for a soil mass and derives stability from passive resistance of the soil in which the soldier beam is embedded and from the tensile resistance of the ground anchors.
    a. Anchored soldier beam with lagging walls are generally designed as flexible structures which have sufficient lateral movement to mobilize active earth pressures and a portion of the passive pressure.
    b. For purposes of these specifications, soldier beams include steel H-piles, wide flange sections or other fabricated sections that are driven or set in drilled holes. Lagging refers to the members spanning between soldier beams.
5. A cantilever sheet pile wall is a structure designed to provide lateral support for a soil mass and derives stability from passive resistance of the soil in which the sheet pile is embedded. If cantilever sheet pile is used for shoring adjacent to an operating track, the shoring system shall be at least 12'-0" away from the centerline of track. Cantilever sheet pile walls shall be used only in granular soils or stiff clays.
6. A cantilever soldier beam with lagging wall is a structure designed to provide lateral support for a soil mass and derives stability from passive resistance of the soil in which the soldier beam is embedded.
7. A braced excavation is a structure designed to provide lateral support for a soil mass and derives stability from passive resistance of the soil in which the vertical members are embedded and from the structural capacity of the bracing members.
    a. For purposes of these guidelines, the vertical members of the braced excavation system include steel sheet piling or soldier beams comprised of steel H-piles, wide flange sections, or other fabricated sections that are driven or installed in drilled holes. Wales are horizontal structural members designed to transfer lateral loads from the vertical members to the struts. Struts are structural compression members that support the lateral loads from the wales.
8. A cofferdam is an enclosed temporary structure used to keep water and soil out of an excavation for a permanent structure such as a bridge pier or abutment or similar structure. Cofferdams may be constructed of timber, steel, concrete or a combination of these. These guidelines consider cofferdams primarily constructed with steel sheet piles.

6. GENERAL SHORING REQUIREMENTS

For general shoring requirements and specific applications of the following items refer to **Figure 1** on the next page which illustrates Plan Number **710000 "GENERAL SHORING REQUIREMENTS"**.

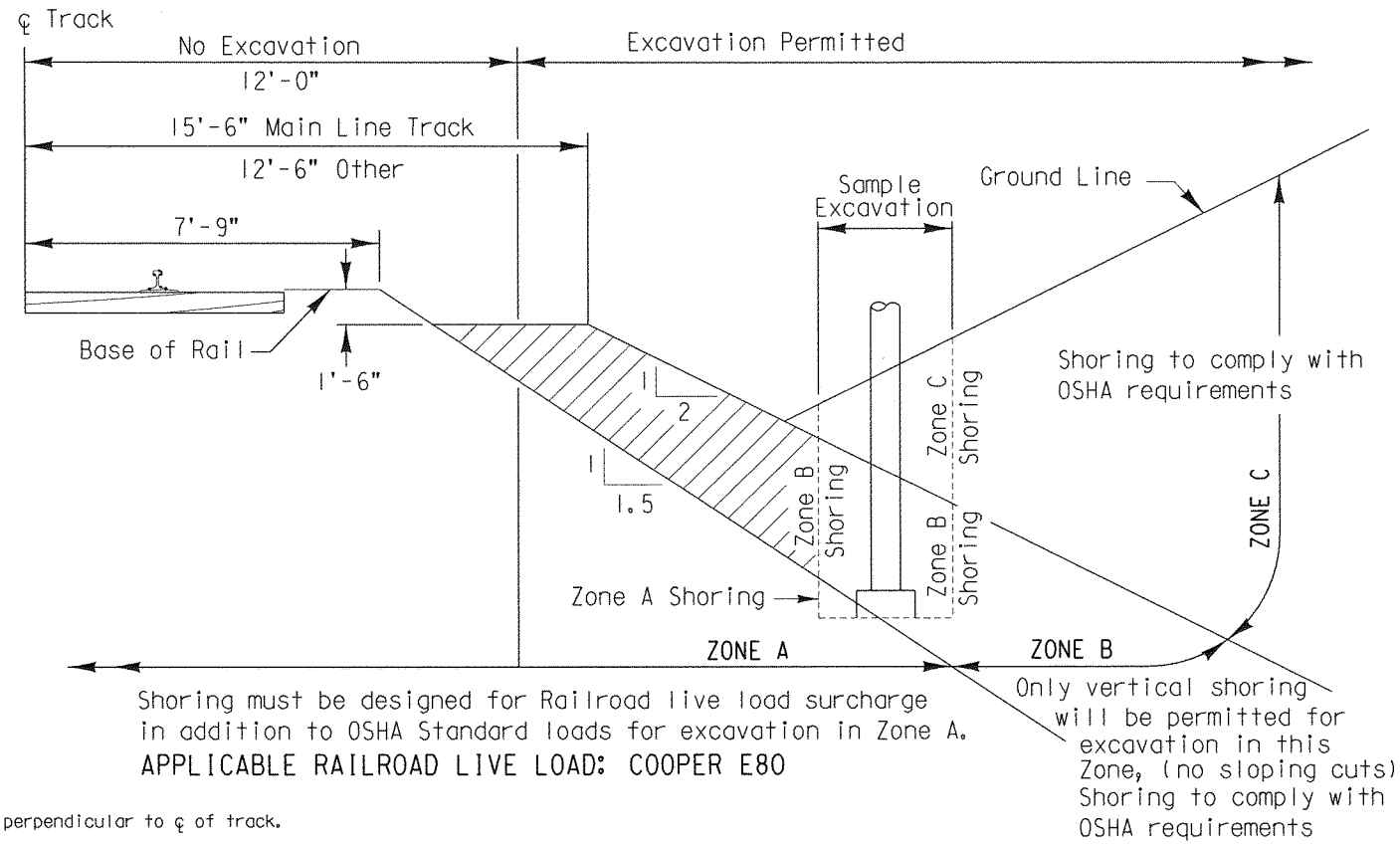

GENERAL NOTES:

All dimensions are measured perpendicular to ℄ of track.

Prior to commencing any work, the contractor shall submit for approval by the Railroad detailed plans indicating the nature and extent of the track protection shoring proposed. The contractor shall install the temporary shoring system per the approved plans. Design of the temporary shoring system to comply with **GUIDELINES FOR TEMPORARY SHORING.**

For excavations which encroach into zone A or B, shoring plans shall be accompanied by design calculations. Plans and calculations must be signed and stamped by a Professional Engineer registered in the state where the work will be performed.

GENERAL EXCAVATION ZONES

SCALE: (NOT TO SCALE)

REVISIONS		
DATE	LTR.	DESCRIPTION
5/03	1	FORMERLY UPRR C.E. 106613
/		
/		
/		
/		
/		

DESIGN BY: PGP | DRAWN BY: JFS | CHECKED BY: AA

APPROVED:

K.H. Jennison

BNSF - ASSISTANT DIRECTOR STRUCTURES DESIGN

George J. Myers 9-1-04

UPRR - MGR SPECIAL PROJECTS STRUCTURES DESIGN

BRIDGE STANDARDS

GENERAL SHORING REQUIREMENTS

FILE OWNER: UPRR | DATE: 5-6-03

PLAN NO.: 710000 | SHEET: 1 OF 1

PLOTTED: $$$$DATE$$$ $TIME

Figure 1

Exhibit A

1. No excavation shall be permitted closer than 12'-0" measured at a right angle from the centerline of track to the trackside of shoring system. If existing conditions preclude the installation of shoring at the required minimum distance, the shifting of tracks or temporary removal of tracks shall be investigated prior to any approval. All costs associated with track shifting or traffic interruption shall be at Contractor's expense.

2. Evaluate slope and stability conditions to ensure the Railroad embankment will not be adversely affected. Local and global stability conditions must also be evaluated.

3. All shoring within the limits of Zone A or Zone B must be placed prior to the start of excavation.

4. Lateral clearances must provide sufficient space for construction of the required ditches parallel to the standard roadbed section. The size of ditches will vary depending upon the flow and terrain and should be designed accordingly.

5. The shoring system must be designed to support the theoretical embankment shown for zones A and B.

6. Any excavation, holes or trenches on the Railroad property shall be covered, guarded and/or protected. Handrails, fence, or other barrier methods must meet OSHA and FRA requirements. Temporary lighting may also be required by the Railroad to identify tripping hazards to train crewmen and other Railroad personnel.

7. The most stringent project specifications of the Public Utilities Commission Orders, Department of Industrial Safety, OSHA, FRA, AREMA, BNSF, UPRR or other governmental agencies shall be used.

8. Secondhand material is not acceptable unless the Engineer of Record submits a full inspection report which verifies the material properties and condition of the secondhand material. The report must be signed and sealed by the Engineer of Record.

9. All components of the shoring system are to be removed when the shoring is no longer needed. All voids must be filled and drainage facilities restored. See compaction requirements section 9, Part 4.

10. Slurry type materials are not acceptable as fill for soldier piles in drilled holes. Concrete and flowable backfill may prevent removal of the shoring system. Use compacted peagravel material.

7. COMPUTATION OF APPLIED FORCES

1. Railroad live load and lateral forces.
   a. For specific applications of the Coopers E80 live load refer to **Figure 2** on the next page which illustrates Plan Number **710001 "LIVE LOAD PRESSURE DUE TO COOPER E80"**. Supplemental information and sample calculations are provided in the Appendix pages A-1 through A-4.
2. Dead load.
   a. Spoil pile: must be included assuming a minimum height of two feet of soil adjacent to the excavation.
   b. Track: use 200 lbs/linear ft for rails, inside guardrails and fasteners.
   c. Roadbed: ballast, including track ties, use 120 lb per cubic foot.

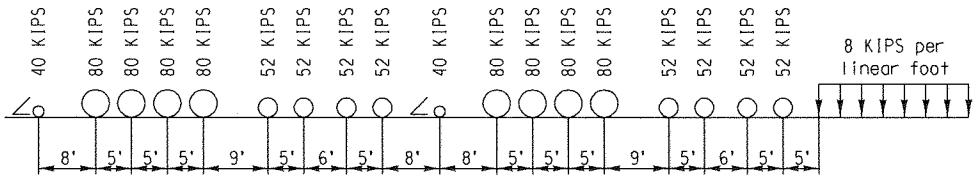

COOPER E80 LOAD

SCALE: (NOT TO SCALE)

Vertical pressure q shall be based on a distribution width Ld.
Ld is the length of tie plus H_1.
H_1 is the height from the bottom of tie to the top of shoring.
H_2 is the depth of point being evaluated with the Boussinesq equation.
S is a distance perpendicular from centerline of track to the face of shoring.
D is from top of shoring to one foot below dredge line.
Zp is the minimum embedment depth.
Length of tie is 9 feet
q is the intensity of strip load due to E80 Railroad live load and shall be calculated as follows:

For $H_1 = 0$ Ld = length of tie; therefore, $q = \frac{80{,}000 \text{ lb}}{(5 \text{ feet})(9 \text{ feet})} = 1{,}778$ psf

For $H_1 > 0$ Ld = length of tie + H_1; therefore, $q = \frac{80{,}000 \text{ lb}}{(5 \text{ feet})(Ld)}$

CASE 1: Lateral live load pressure Ps, due to E80 loading for track **parallel** to shoring system is calculated using the Boussinesq Strip Load Equation.

$$Ps = \frac{2q}{\pi}(\beta + \sin\beta \sin^2\alpha - \sin\beta \cos^2\alpha)$$

The above equation can be simplified into the following equivalent form:

$$Ps = \frac{2q}{\pi}[\beta - \sin\beta \cos(2\alpha)]$$

α and β are angles measured in radians, $\alpha = \theta + \frac{\beta}{2}$

CASE 2: Live load pressure due to E80 loading for track at a **right angle** to the shoring system can be calcuated using the following equation.

$$Ps = K_A q$$

where $K_A = \tan^2(45 - \frac{\phi}{2})$

ϕ is the angle of internal friction in degrees

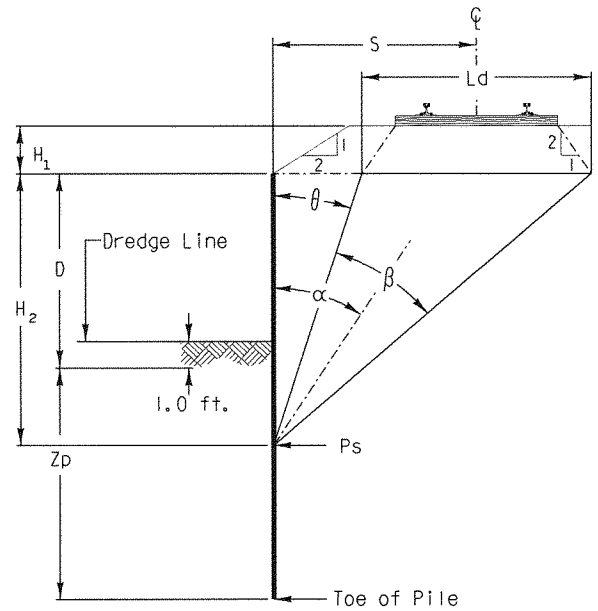

PLAN

SCALE: (NOT TO SCALE)

REVISIONS		
DATE	LTR.	DESCRIPTION
/		
/		
/		
/		
/		
/		

DESIGN BY: PGP | DRAWN BY: JFS | CHECKED BY: AA

APPROVED:

K.H. Jennison

BNSF - ASSISTANT DIRECTOR STRUCTURES DESIGN

George J. Mayer 9-1-04

UPRR - MGR SPECIAL PROJECTS STRUCTURES DESIGN

BRIDGE SHORING STANDARDS

LIVE LOAD PRESSURE DUE TO COOPER E80

FILE OWNER: UPRR | DATE:

PLAN NO.: 710001 | SHEET: 1 OF 1

PLOTTED: $$$$DATE$$$ $TIME

Figure 2

Exhibit A

3. Active earth pressure.

   a. The active earth pressure due to the soil may be computed by the Coulomb Theory or other approved method.

   b. The active earth pressure at depth "z_a" is:

   $P_A = K_A \gamma z_a$, where $K_A = \tan^2(45 - \frac{\phi}{2})$

   z_a = depth of soil influencing the active pressure.

4. Active earth pressure due to unbalanced water pressure.

   a. When bulkheads are used for waterfront construction, the bulkhead is subjected to a maximum earth pressure at the low water stage. During a rainstorm or a rapidly receding high water, the water level behind the bulkhead may be several feet higher than in front of the bulkhead.

   b. Drained conditions in backfill apply when clean sand or clean sand and gravel are used and adequate permanent drainage outlets are provided. Where drained conditions exist, the design water level may be assumed at the drainage outlet elevation.

5. Active earth pressure due to surcharge load.

   The active earth pressure due to surcharge load q':

   $P_U = K_A q'$, where $K_A = \tan^2(45 - \frac{\phi}{2})$

6. Passive earth pressure.

   The passive earth pressure, P_p, in front of the bulkhead may also be computed by the Coulomb Theory.

   $P_p = K_p \gamma z_p$, where $K_P = \tan^2(45 + \frac{\phi}{2})$

   z_p = vertical distance beginning one foot below dredge line but not to exceed embedment depth

7. Pressure due to embankment surcharges.

   Conventional analysis (Rankine, Coulomb, or Log-Spiral) should be used to determine the additional surcharge from embankment slopes.

8. Additional analysis for centrifugal force calculations as described in **AREMA Chapter 15, Part 1, Section 1.3, Article 1.3.6** Centrifugal Loads are required where track curvature exceeds three degrees.

9. Include and compute all other loads that are impacting the shoring system such as a typical Railroad service vehicle (HS-20 truck).

8. STRUCTURAL INTEGRITY

Structures and structural members shall be designed to have design strengths at all sections at least equal to the required strengths calculated for the loads and forces in such combinations as stipulated in **AREMA Chapter 8 Part 2 Article 2.2.4b**, which represents various combinations of loads and forces to which a structure may be subjected. Each part of the structure shall be proportioned for the group loads that are applicable, and the maximum design required shall be used.

1. Embedment depth.

   a. Calculated depth of embedment is the embedment depth required to maintain static equilibrium.

b. Minimum depth of embedment is the total depth of embedment required to provide static equilibrium plus additional embedment due to the minimum factor of safety.

   1. Embedment depth factor of safety for well-defined loading conditions and thoroughly determined soil parameters is generally 1.3 for most temporary shoring systems. (See **AREMA 8.20.4.1.c**)

   2. All anchored shoring systems require a minimum embedment depth of 1.5 times the calculated depth of embedment. Shallow penetration into strong soil layers is not acceptable. (See **AREMA 8.20.5.1**)

2. The allowable stresses based on AREMA requirements are as follows:

   Structural Steel: 0.55Fy for Compression in extreme fiber. **(AREMA Ch.15 Table 1-11)**

   Structural Steel: 0.35Fy for Shear. **(AREMA Ch.15 Table 1-11)**

   Sheet Pile Sections: 2/3 of yield strength for steel. **(AREMA 8.20.5.7)**

   Concrete: 1/3 of Compressive strength. **(AREMA 8.20.5.7)**

   Anchor Rods: 1/2 of yield strength for steel. **(AREMA 8.20.5.7)**

3. AISC allowances for increasing allowable stress due to temporary loading conditions are not acceptable.

4. Gravity type temporary shoring systems must also be analyzed for overturning, sliding and global stability.

5. The contractor is responsible for providing an approved test method to verify the capacity of anchored or tieback systems. The manufacturers recommendations for testing must be satisfied. Systems which support the Railroad embankment will be considered high risk in determining the percentage of elements to be proof tested.

6. Calculated deflections of temporary shoring system and top of rail elevation shall not exceed the criteria outlined in **Table 1 Deflection Criteria**.

Table 1 Deflection Criteria

Horizontal distance from shoring to track C/L measured at a right angle from track	Maximum horizontal movement of shoring system	Maximum acceptable horizontal or vertical movement of rail
12' < S < 18'	3/8"	1/4"
18' < S < 24'	1/2"	1/4"

9. SOIL CHARACTERISTICS

1. Subsurface Exploration. **(AREMA 8.5.2.2)**

   a. Sufficient borings shall be made along the length of the structure to determine, with a reasonable degree of certainty, the subsurface conditions. Irregularities found during the initial soil boring program may dictate that additional borings be taken.

   b. The subsurface investigation shall be made in accordance with the provisions of **AREMA Chapter 8 Part 22, Geotechnical Subsurface Investigation**.

2. Type of backfill.

   a. Backfill is defined as material behind the wall, whether undisturbed ground or fill, that contributes to the pressure against the wall.

b. The backfill shall be investigated and classified with reference to the soil types described in **AREMA Table 8-5-1**.

c. Types 4 and 5 backfill shall be used only with the permission of the Engineer. In all cases the wall design shall be based on the type of backfill used.

Table 8-5-1 (AREMA) Types of Backfill for Retaining Walls

Backfill Type	Backfill Description
1	Coarse-grained soil without admixture of fine soil particles, very free-draining (clean sand, gravel or broken stone).
2	Coarse-grained soil of low permeability due to admixture of particles of silt size.
3	Fine silty sand; granular materials with conspicuous clay content; or residual soil with stones.
4	Soft or very soft clay, organic silt; or soft silty clay.
5	Medium or stiff clay that may be placed in such a way that a negligible amount of water will enter the spaces between the chunks during floods or heavy rains.

3. Computation of backfill pressure. **(AREMA 8.5.3.2a)**

a. Values of the unit weight, cohesion, and angle of internal friction of the backfill material shall be determined directly by means of soil tests or, if the expense of such tests is not justifiable, by means of **AREMA Table 8-5-2** referring to the soil types defined in **AREMA Table 8-5-1**. Unless the minimum cohesive strength of the backfill material can be evaluated reliably, the cohesion shall be neglected and only the internal friction considered. See Appendix page A-6 for AREMA generic soil properties.

Table 8-5-2 (AREMA) Properties of Backfill Materials

Type of Backfill	Unit Weight Lb. Per Cu. Ft.	Cohesion "c"	Angle of Internal Friction
1	105	0	33°-42°(38°for broken stone)
2	110	0	30°
3	125	0	28°
4	100	0	0°
5	120	240	0°

4. Compaction.

a. The backfill shall preferably be placed in loose layers not to exceed 8 inches in thickness. Each layer shall be compacted before placing the next, but over compaction shall be avoided.

b. It is required that backfill be compacted to no less than 95% of maximum dry density at a moisture content within 2% of optimum and tested using Modified Proctor ASTM D1557.

c. Fill within 100 feet of bridge ends or 20 feet outside culverts shall be placed and compacted to not less than 100% of maximum.

d. No dumping of backfill material shall be permitted in such a way that the successive layers slope downward toward the wall. The layers shall be horizontal or shall slope downward away from the wall.

10. PLANS

The shoring plans must completely identify the site constraints and the shoring system. Use the design templates provided in the appendix as an example to show the required information, specifications and drawings. The specific requirements of the plan submittals are as follows:

1. General plan view should show:
   a. Railroad right-of-way and North arrow.
   b. Position of all Railroad tracks and identify each track as mainline, siding, spur, etc.
   c. Spacing between all existing tracks.
   d. Location of all access roadways, drainage ditches and direction of flow.
   e. Footprint of proposed structure, proposed shoring system and any existing structures if applicable.
   f. Proposed horizontal construction clearances. The minimum allowable is 12 feet measured at a right angle from centerline of track.
   g. Location of existing and proposed utilities.
   h. Drawings must be signed and stamped by a Licensed Professional Engineer, registered in the state where the work will be performed.
   i. Railroad and other "CALL BEFORE YOU DIG" numbers.
   j. Detailed view of shoring along with controlling elevations and dimensions.
2. Typical section and elevation should show:
   a. Top of rail elevations for all tracks.
   b. Offset from the face of shoring system to the centerline of all tracks at all changes in horizontal alignment.
   c. All structural components, controlling elevations and dimensions of shoring system.
   d. All drainage ditches and controlling dimensions.
   e. All slopes, existing structures and other facilities which may surcharge the shoring system.
   f. Location of all existing and proposed utilities.
   g. Total depth of shoring system.
3. General criteria
   a. Design loads to be based on the AREMA manual and Cooper E80 loading.
   b. Pressure due to embankment surcharges.
   c. ASTM designation and yield strength for each material.
   d. Maximum allowable bending stress for structural steel is 0.55Fy.
   e. Temporary overstress allowances are not acceptable.
   f. All timber members shall be Douglas Fir grade 2 or better.
   g. Insitu soil classification.
   h. Backfill soil classification.
   i. Internal angle of friction and unit weight of the soil.
   j. Active and passive soil coefficients.
   k. Fill within 100 feet of bridge ends or 20 feet outside culverts shall be placed and compacted to a minimum of 100% of maximum dry density tested per Modified Proctor ASTM D1557.
   l. Slopes without shoring shall not be steeper than 2 horizontal to 1 vertical

m. Dredge line elevation.

n. Shoring deflection to be calculated and meet Railroad requirements.

4. Miscellaneous:

a. Project name, location, GPS coordinates, track owner, Railroad line segment, milepost and subdivision in the title block.

b. Procedure outlining the installation and removal of the temporary shoring system.

c. General notes specifying material requirements, design data, details, dimensions, cross-sections, sequence of construction etc.

d. A description of the tieback installation including drilling, grouting, stressing information and testing procedures, anchor capacity, type of tendon, anchorage hardware, minimum unbonded lengths, minimum anchor lengths, angle of installation, tieback locations and spacing.

e. All details for construction of drainage facilities associated with the shoring system shall be clearly indicated.

f. Details and descriptions of all shoring system members and connection details.

g. Settlement and displacement calculations.

h. Handrail and protective fence details along the excavation.

i. Drawings must be signed and stamped by a Licensed Professional Engineer, registered in the state where the work will be performed.

j. Call before you dig number.

k. Construction clearance diagram.

11. SUBMITTALS

The Contractor will be responsible for any and all cost associated with the review of plans by the Railroad. Review of design submittals by the Railroad will require a minimum of four (4) weeks. To avoid impacting the construction schedule, the Contractor must schedule submittals well in advance. Partial, incomplete or inadequate designs will be rejected, thus delaying the approval. Revised submittals will follow the same procedure as the initial submittal until all issues are resolved. Submit a minimum of three sets of shoring plans and two sets of calculations with manufacturers' specifications. Drawings and calculations must be signed and stamped by a Registered Professional Engineer familiar with Railway loadings and who is licensed in the state where the shoring system is intended for use. Drawings accompanying the shoring plans shall be submitted on 11" x 17" or 8½" x 11" sized paper.

1. Contractor review.

   The Contractor must review the temporary shoring plans to ensure that the proposed method of construction is compatible with the existing site and soil conditions. The Contractor's work plan must be developed to allow train traffic to remain in service. Removal of the shoring system must also be addressed.

2. Applicant and or Engineer of Record review.

   The applicant and or Engineer of Record must review and approve the submittal for compliance with the project specifications, AREMA Manual, these guidelines and structural capacity before forwarding the submittal to the Railroad.

3. Review process.

   All design submittals shall be forwarded to the Railroad Representative who will send them to the Structures Design Department. The Structures Design Department shall review or have an outside consultant review said submittals. If a Railroad consultant performs said review, the consultant may reply directly to the applicant or their representative after consultation with the Structures Design Department. A copy of the reply will be mailed to the Railroad Representative. During the review process the Railroad Representative is the point of contact to resolve outstanding issues.

12. APPENDIX

ITEM PAGE

1. SAMPLE PROBLEM . . . . . A-1 & A-2

2. CHART A . . . . . A-3 & A-4

3. GUIDELINE & WEBSITE DIRECTORY A-5

4. TABLES A-6
   - AREMA Table 8-20-1. Granular Soils
   - AREMA Table 8-20-2. Silt and Clay Soils
   - AREMA Table 8-20-3. Unit Weights of Soils, and Coefficients of Earth Pressure

5. TEMPLATES
   - GENERAL CRITERIA AND MISCELLANEOUS A-7
   - GENERAL PLAN VIEW A-8
   - TYPICAL SECTION & ELEVATION VIEW A-9

13. BIBLIOGRAPHY

The following list of references used in these guidelines are placed here in alphabetical order for your convenience.

1. *Manual for Railway Engineering*, 2002 American Railway Engineering and Maintenance-of-Way Association.

2. *TRENCHING AND SHORING MANUAL,* January 1990, Revision 11/12/96. State of California Department of Transportation, Office of Structures Construction.

SAMPLE PROBLEM

Point in question: S = 12 ft H = 6 ft

$q = \frac{80{,}000 \text{ lbs}}{(5 \text{ ft})(9 \text{ ft})} = 1778 \text{ psf}$ for E80 loading, axle spacing = 5 ft, tie length b = 9 ft

Solve for $X_1 = S - b/2 = 7.5$ ft

Solve for $X_2 = S + b/2 = 16.5$ ft

Solve for $\theta_1 = \arctan\left(\frac{X_1}{H}\right) = 0.896$ radians

Solve for $\theta_2 = \arctan\left(\frac{X2}{H}\right) = 1.222$ radians

Solve for $\beta = \theta_2 - \theta_1 = 0.326$ radians

Solve for $\alpha = \frac{\theta_1 + \theta_2}{2} = 1.059$ radians

Note: $\tan\alpha \neq \frac{S}{H}$

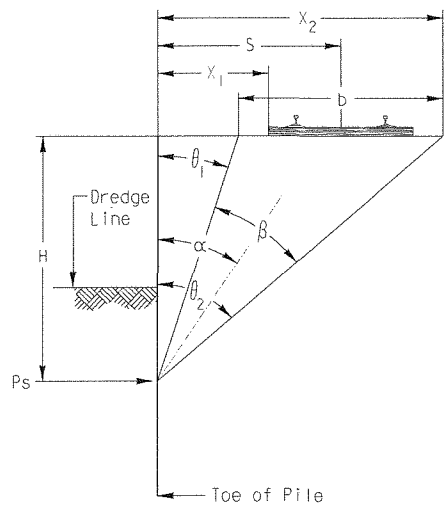

PRESSURE DISTRIBUTION FOR STRIP LOAD

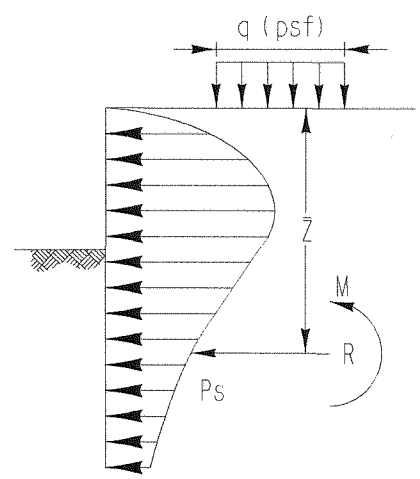

EQUIVALENT LOADING

- Pressure, Ps due to E80 liveload at the above-identified point:

$$Ps = \frac{2q}{\pi}(\beta - \sin\beta\cos 2\alpha) = \frac{2*1778}{\pi}(0.326 - \sin(0.326)\cos(2*1.059)) = 558.\text{psf}$$

- Shear due to E80 liveload at the above-identified point:

$$R_x = \frac{2qH\beta}{\pi} = \frac{2*1778*6*0.326}{\pi} = 2214.lbs/\text{ft}$$

- Depth $\bar{z}$ from base of tie:

$$\bar{z} = \frac{H^2\beta - bH + x_2^2\left(\frac{\pi}{2} - \theta_2\right) - x_1^2\left(\frac{\pi}{2} - \theta_1\right)}{2H\beta} = \frac{6^2*0.326 - 9*6 + 16.5^2\left(\frac{\pi}{2} - 1.222\right) - 7.5^2\left(\frac{\pi}{2} - 0.896\right)}{2*6*0.326} = 3.77\text{ft}$$

- Moment due to E80 liveload at the above identified point:

$$M = R_x\left(H - \bar{z}\right) = 2214 * \left(6 - 3.77\right) = 4940 \text{ ft-lbs/ft}$$

Use the above equations to determine Ps, M, R_x & $\bar{z}$ due to the E80 liveload along the **entire** depth of the shoring system. Typically the equations are evaluated on 6" increments to determine the maximum values along the depth of the shoring system. The resultants must be combined with other applicable pressures and loads to evaluate the total loading on the shoring system for the entire depth of the system. Determine the minimum embedment depth required and the minimum cross sectional properties of the shoring system based on the allowable stresses and the required factors of safety.

CHART A

This chart identifies the active pressure and resulting forces due to E80 liveload.
See "SAMPLE PROBLEM" sheet for definitions of variables and equations.

1. Select distance S from track centerline to face of shoring.
2. Select depth H_2 below base of tie.
3. Read Ps, M, R and $\bar{z}$ from the table.
4. Use the procedure outlined in the sample problem to determine values at non-tabulated points.

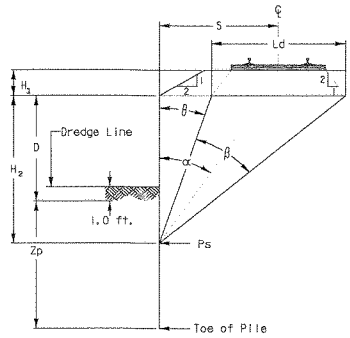

$$Ps = \frac{2q}{\pi}\left[\beta - \sin\beta\cos(2\alpha)\right]$$

where q = 1778 psf

Boussinesq surcharge pressure E80 live load for H_1=0

Depth below top of shoring H_2 (ft)	Variables		Horizontal distance (S) from shoring to track CL measured at a right angle									
			12	14	16	18	20	22	24	26	28	30
2	**Ps**	(psf)	**305**	**220**	**166**	**130**	**105**	**86**	**72**	**61**	**53**	**46**
	α	(radians)	1.38	1.41	1.44	1.45	1.47	1.48	1.48	1.49	1.50	1.50
	β	(radians)	0.14	0.10	0.07	0.06	0.05	0.04	0.03	0.03	0.02	0.02
	$\bar{z}$	(ft)	1.32	1.33	1.33	1.33	1.33	1.33	1.33	1.33	1.33	1.33
	M	(ft-lbs/ft)	215	152	114	89	71	58	49	41	36	31
	R	(lbs/ft)	317	226	170	132	106	87	73	62	53	46
4	**Ps**	(psf)	**496**	**381**	**299**	**240**	**197**	**164**	**138**	**118**	**102**	**89**
	α	(radians)	1.21	1.27	1.31	1.34	1.36	1.38	1.40	1.41	1.43	1.44
	β	(radians)	0.25	0.19	0.14	0.11	0.09	0.07	0.06	0.05	0.05	0.04
	$\bar{z}$	(ft)	2.59	2.61	2.63	2.64	2.64	2.65	2.65	2.65	2.65	2.66
	M	(ft-lbs/ft)	1,609	1,165	882	692	557	459	384	327	281	244
	R	(lbs/ft)	1,141	840	643	508	411	339	285	242	209	182
6	**Ps**	(psf)	**558**	**461**	**381**	**317**	**266**	**225**	**193**	**167**	**146**	**128**
	α	(radians)	1.06	1.13	1.19	1.23	1.27	1.29	1.32	1.34	1.35	1.37
	β	(radians)	0.33	0.25	0.20	0.16	0.13	0.11	0.09	0.08	0.07	0.06
	$\bar{z}$	(ft)	3.77	3.83	3.88	3.90	3.92	3.94	3.95	3.96	3.96	3.97
	M	(ft-lbs/ft)	4,944	3,674	2,830	2,244	1,822	1,508	1,269	1,082	933	813
	R	(lbs/ft)	2,214	1,696	1,332	1,070	877	731	618	529	458	400
8	**Ps**	(psf)	**535**	**476**	**414**	**358**	**309**	**268**	**234**	**205**	**181**	**160**
	α	(radians)	0.94	1.02	1.08	1.13	1.17	1.21	1.24	1.26	1.29	1.30
	β	(radians)	0.37	0.29	0.24	0.19	0.16	0.14	0.12	0.10	0.09	0.08
	$\bar{z}$	(ft)	4.84	4.97	5.06	5.11	5.16	5.19	5.21	5.23	5.24	5.26
	M	(ft-lbs/ft)	10,481	8,006	6,286	5,051	4,141	3,452	2,920	2,501	2,165	1,892
	R	(lbs/ft)	3,316	2,641	2,134	1,751	1,456	1,228	1,047	903	786	689
10	**Ps**	(psf)	**474**	**449**	**411**	**370**	**329**	**293**	**260**	**232**	**207**	**186**
	α	(radians)	0.83	0.92	0.99	1.04	1.09	1.13	1.17	1.19	1.22	1.24
	β	(radians)	0.38	0.32	0.26	0.22	0.19	0.16	0.14	0.12	0.10	0.09
	$\bar{z}$	(ft)	5.81	6.02	6.16	6.26	6.34	6.39	6.44	6.47	6.50	6.52
	M	(ft-lbs/ft)	18,145	14,227	11,385	9,280	7,689	6,463	5,502	4,736	4,117	3,610
	R	(lbs/ft)	4,328	3,571	2,964	2,482	2,099	1,792	1,544	1,341	1,175	1,037
12	**Ps**	(psf)	**404**	**403**	**386**	**360**	**331**	**302**	**274**	**248**	**225**	**204**
	α	(radians)	0.75	0.83	0.90	0.96	1.01	1.06	1.10	1.13	1.16	1.18
	β	(radians)	0.38	0.33	0.28	0.24	0.20	0.18	0.15	0.13	0.12	0.11
	$\bar{z}$	(ft)	6.68	6.97	7.18	7.34	7.46	7.55	7.61	7.67	7.71	7.75
	M	(ft-lbs/ft)	27,703	22,237	18,121	14,980	12,550	10,641	9,121	7,895	6,894	6,068
	R	(lbs/ft)	5,207	4,424	3,763	3,214	2,762	2,389	2,080	1,823	1,608	1,427
14	**Ps**	(psf)	**338**	**351**	**349**	**337**	**319**	**298**	**276**	**255**	**234**	**215**
	α	(radians)	0.68	0.76	0.83	0.89	0.94	0.99	1.03	1.07	1.10	1.13
	β	(radians)	0.38	0.33	0.28	0.25	0.22	0.19	0.17	0.15	0.13	0.12
	$\bar{z}$	(ft)	7.46	7.85	8.13	8.35	8.51	8.64	8.74	8.82	8.89	8.94
	M	(ft-lbs/ft)	38,880	31,856	26,395	22,116	18,729	16,021	13,831	12,043	10,568	9,339
	R	(lbs/ft)	5,948	5,178	4,499	3,913	3,414	2,990	2,631	2,327	2,068	1,847
16	**Ps**	(psf)	**280**	**301**	**310**	**308**	**300**	**286**	**271**	**254**	**237**	**220**
	α	(radians)	0.62	0.70	0.77	0.83	0.88	0.93	0.97	1.01	1.04	1.07
	β	(radians)	0.36	0.32	0.28	0.25	0.22	0.20	0.18	0.16	0.14	0.13
	$\bar{z}$	(ft)	8.17	8.64	9.01	9.29	9.51	9.68	9.82	9.93	10.03	10.10
	M	(ft-lbs/ft)	51,411	42,880	36,066	30,598	26,183	22,590	19,644	17,207	15,175	13,468
	R	(lbs/ft)	6,563	5,829	5,158	4,560	4,034	3,576	3,179	2,837	2,540	2,284

This chart identifies the active pressure and resulting forces due to E80 liveload.
See "SAMPLE PROBLEM" sheet for definitions of variables and equations.

1. Select distance S from track centerline to face of shoring.
2. Select depth H_2 below base of tie.
3. Read Ps, M, R and $\bar{z}$ from the table.
4. Use the procedure outlined in the sample problem to determine values at non-tabulated points.

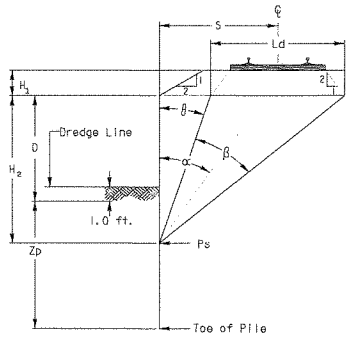

$$Ps = \frac{2q}{\pi}\left[\beta - \sin\beta\cos(2\alpha)\right]$$

where q = 1778 psf

Boussinesq surcharge pressure E80 live load for H_1=0

Depth below top of shoring H_2 (ft)	Variables		Horizontal distance (S) from shoring to track CL measured at a right angle									
			12	14	16	18	20	22	24	26	28	30
18	**Ps**	(psf)	**231**	**256**	**271**	**277**	**276**	**269**	**259**	**247**	**234**	**220**
	α	(radians)	0.57	0.64	0.71	0.77	0.82	0.87	0.92	0.96	0.99	1.02
	β	(radians)	0.35	0.31	0.28	0.25	0.23	0.20	0.18	0.16	0.15	0.13
	$\bar{z}$	(ft)	8.80	9.37	9.81	10.16	10.44	10.67	10.85	11.00	11.12	11.22
	M	(ft-lbs/ft)	65,062	55,110	46,976	40,313	34,834	30,304	26,536	23,384	20,728	18,477
	R	(lbs/ft)	7,072	6,386	5,739	5,145	4,609	4,132	3,710	3,338	3,012	2,725
20	**Ps**	(psf)	**191**	**217**	**236**	**246**	**250**	**249**	**244**	**237**	**227**	**217**
	α	(radians)	0.52	0.59	0.66	0.72	0.77	0.82	0.87	0.91	0.94	0.98
	β	(radians)	0.33	0.30	0.28	0.25	0.23	0.21	0.19	0.17	0.15	0.14
	$\bar{z}$	(ft)	9.37	10.03	10.56	10.98	11.32	11.59	11.82	12.01	12.16	12.30
	M	(ft-lbs/ft)	79,641	68,368	58,973	51,137	44,586	39,093	34,465	30,548	27,216	24,367
	R	(lbs/ft)	7,493	6,859	6,245	5,668	5,135	4,651	4,214	3,822	3,474	3,163
22	**Ps**	(psf)	**159**	**184**	**204**	**217**	**225**	**228**	**227**	**223**	**217**	**210**
	α	(radians)	0.49	0.55	0.62	0.67	0.73	0.77	0.82	0.86	0.90	0.93
	β	(radians)	0.31	0.29	0.27	0.25	0.23	0.21	0.19	0.17	0.16	0.14
	$\bar{z}$	(ft)	9.89	10.64	11.24	11.73	12.14	12.47	12.74	12.97	13.17	13.33
	M	(ft-lbs/ft)	94,986	82,497	71,913	62,945	55,341	48,878	43,370	38,658	34,611	31,122
	R	(lbs/ft)	7,842	7,260	6,684	6,131	5,611	5,128	4,685	4,283	3,918	3,590
24	**Ps**	(psf)	**133**	**157**	**176**	**191**	**202**	**207**	**210**	**209**	**206**	**201**
	α	(radians)	0.45	0.52	0.58	0.63	0.68	0.73	0.78	0.82	0.85	0.89
	β	(radians)	0.30	0.28	0.26	0.24	0.22	0.20	0.19	0.17	0.16	0.15
	$\bar{z}$	(ft)	10.35	11.19	11.87	12.44	12.90	13.29	13.62	13.89	14.13	14.32
	M	(ft-lbs/ft)	110,969	97,366	85,670	75,625	66,997	59,577	53,183	47,661	42,875	38,716
	R	(lbs/ft)	8,132	7,600	7,064	6,540	6,037	5,564	5,122	4,715	4,342	4,001
26	**Ps**	(psf)	**112**	**134**	**153**	**168**	**180**	**188**	**192**	**194**	**193**	**191**
	α	(radians)	0.42	0.48	0.54	0.60	0.65	0.69	0.74	0.78	0.82	0.85
	β	(radians)	0.28	0.27	0.25	0.23	0.22	0.20	0.19	0.17	0.16	0.15
	$\bar{z}$	(ft)	10.78	11.69	12.45	13.09	13.62	14.07	14.44	14.77	15.04	15.28
	M	(ft-lbs/ft)	127,485	112,863	100,135	89,071	79,460	71,105	63,836	57,499	51,963	47,113
	R	(lbs/ft)	8,376	7,890	7,393	6,899	6,418	5,959	5,524	5,118	4,741	4,393
28	**Ps**	(psf)	**94**	**114**	**132**	**148**	**160**	**169**	**175**	**179**	**180**	**180**
	α	(radians)	0.40	0.46	0.51	0.56	0.61	0.66	0.70	0.74	0.78	0.81
	β	(radians)	0.27	0.26	0.24	0.23	0.21	0.20	0.19	0.17	0.16	0.15
	$\bar{z}$	(ft)	11.17	12.16	12.99	13.70	14.29	14.80	15.23	15.60	15.91	16.19
	M	(ft-lbs/ft)	144,448	128,896	115,211	103,191	92,642	83,385	75,258	68,113	61,823	56,274
	R	(lbs/ft)	8,581	8,137	7,677	7,214	6,758	6,315	5,892	5,491	5,115	4,764
30	**Ps**	(psf)	**80**	**98**	**115**	**130**	**142**	**152**	**160**	**165**	**167**	**168**
	α	(radians)	0.37	0.43	0.48	0.53	0.58	0.63	0.67	0.71	0.74	0.78
	β	(radians)	0.26	0.25	0.23	0.22	0.21	0.20	0.18	0.17	0.16	0.15
	$\bar{z}$	(ft)	11.52	12.59	13.49	14.26	14.92	15.48	15.97	16.38	16.75	17.06
	M	(ft-lbs/ft)	161,789	145,388	130,819	117,903	106,466	96,343	87,381	79,443	72,404	66,153
	R	(lbs/ft)	8,755	8,349	7,925	7,492	7,060	6,636	6,227	5,834	5,462	5,112
32	**Ps**	(psf)	**69**	**85**	**101**	**115**	**127**	**137**	**145**	**151**	**155**	**157**
	α	(radians)	0.35	0.41	0.46	0.51	0.55	0.60	0.64	0.68	0.71	0.75
	β	(radians)	0.25	0.24	0.22	0.21	0.20	0.19	0.18	0.17	0.16	0.15
	$\bar{z}$	(ft)	11.85	12.98	13.95	14.79	15.51	16.13	16.67	17.13	17.54	17.89
	M	(ft-lbs/ft)	179,452	162,274	146,888	133,136	120,859	109,909	100,144	91,432	83,655	76,706
	R	(lbs/ft)	8,904	8,532	8,140	7,736	7,329	6,925	6,531	6,150	5,785	5,438

BNSF guidelines are as follows:

a. Guidelines for Design and Construction of Grade Separation Structures.

UPRR guidelines are as follows:

a. **Underpass Structures** – "Guidelines for Design and Construction of Grade Separation Underpass Structures."
b. **Overhead Grade Separation** – "Guidelines for Design of Highway Separation Structures Over Railroad (Overhead Grade Separation)."
c. **Demolition** – "Guidelines for Preparation of a Bridge Demolition and Removal Plan for Structures Over Railroad."
d. **Shoofly** – "Guidelines for Design and Construction of Shoofly (Detour) Tracks."
e. **Fiber Optic** – "UPRR Fiber Optic Engineering, Construction And Maintenance Standards." 1/1/2002
f. **Pipeline** – "Pipeline Installation" available at www.uprr.com.
g. **Industry Track** – "Technical Specification for Construction of Industrial Tracks"

WEBSITE DIRECTORY:

1. www.astm.org
2. www.arema.org
3. www.bnsf.com
4. www.pilespecs.com
5. www.uprr.com

AREMA Table 8-20-1. Granular Soils

Descriptive Term for Relative Density	Standard Penetration Test Blows per Foot "N"
Very Loose	0 - 4
Loose	4 - 10
Medium	10 - 30
Dense	30 - 50
Very Dense	Over 50

AREMA Table 8-20-2. Silt and Clay Soils

Descriptive Term for Consistency	Unconfined Compressive Strength Tons per Square Foot
Very Soft	Less than 0.25
Soft	0.25 - 0.50
Medium	0.50 - 1.00
Stiff	1.00 - 2.00
Very Stiff	2.00 - 4.00
Hard	Over 4.00

AREMA Table 8-20-3. Unit Weights of Soils, and Coefficients of Earth Pressure

Type of Soil	Unit Weight of Moist Soil, γ (Note 1)		Unit Weight of Submerged Soil, γ' (Note 1)		Coefficient of Active Earth Pressure, K_A				Coefficient of Passive Earth Pressure, Kp		
					For Backfill	For Soils in Place	Friction Angles (Note 2)		For Soils in Place	Friction Angles (Note 2)	
	Minimum	Maximum	Minimum	Maximum			ϕ	δ		ϕ	δ
(1)	(2)	(3)	(4)	(5)	(6)	(7)	(8)	(9)	(10)	(11)	(12)
Clean Sand:											
Dense	110	140	65	78		0.20	38	20	9.0	38	25
Medium	110	130	60	68		0.25	34	17	7.0	34	23
Loose	90	125	56	63	0.35	0.30	30	15	5.0	30	20
Silty Sand:											
Dense	110	150	70	88		0.25			7.0		
Medium	95	130	60	68		0.30			5.0		
Loose	80	125	50	63	0.50	0.35			3.0		
Silt and Clay (Note 3)	$\frac{165(1+w)}{1+2.65w}$		$\frac{103}{1+2.65w}$		1.00	$1-\frac{q_u}{p+\gamma z}$			$1+\frac{q_u}{p+\gamma z}$		

Note 1: In pounds per cubic foot.
Note 2: These angles, expressed in degrees, are ϕ, the angle of internal friction, and δ, the angle of wall friction, and are used in estimating the coefficients under which they are listed.
Note 3: The symbol γ represents γ or γ', whichever is applicable; p is the effective unit pressure on the top surface of the stratum; q_u is the unconfined compressive strength; w is the natural water content, in percentage of dry weight; and z is the depth below the top surface of the stratum.

General criteria:

a. Design loads to be based on the AREMA manual and Cooper E80 loading.
b. Pressure due to embankment surcharges.
c. ASTM designation and yield strength for each material.
d. Maximum allowable bending stress for steel is 0.55Fy.
e. Temporary overstress allowances are not acceptable.
f. All timber members shall be Douglas Fir Grade 2 or better.
g. Insitu soil classification.
h. Backfill soil classification.
i. Internal angle of friction and unit weight of soil.
j. Active and passive soil coefficients.
k. Backfill compacted to a minimum of 95% Proctor density per ASTM D-1557.
l. Slopes without shoring shall not be steeper than 2 horizontal to 1 vertical.
m. Dredge line elevation.
n. Shoring deflection to be calculated and meet Railroad requirements.

Miscellaneous:

a. Project name, location, GPS coordinates, track owner, Railroad line segment, milepost and subdivision in the title block.
b. Procedure outlining the installation and removal of the temporary shoring system.
c. General notes specifying material requirements, design data, details, dimensions and cross-sections, sequence of construction etc.
d. A description of tieback installation including drilling, grouting, stressing information and testing procedures, anchor capacity, type of tendon, anchorage hardware, minimum unbonded lengths, minimum anchor lengths, angle of installation, tieback locations and spacing.
e. All details for construction of drainage facilities associated with the shoring system shall be clearly indicated.
f. Details and descriptions of all shoring system members and connection details.
g. Settlement and displacement calculations.
h. Handrail and protective fence details along the excavations.
i. Drawings must be signed and stamped by a Licensed Professional Engineer, registered in the state where the work will be performed.
j. Call before you dig number.
k. Construction clearances diagram as shown below.

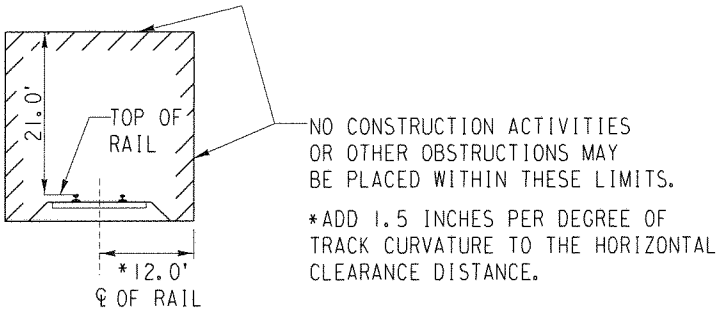

MINIMUM CONSTRUCTION CLEARANCES
(NORMAL TO RAILROAD)
Not to scale

DESIGN BY:	NAME & LOGO OF ENGINEERING FIRM OR PROJECT OWNER
DRAWN BY:	
SCALE:	GENERAL CRITERIA AND MISCELLANEOUS
DRAWING NO:	
SHEET: 1 of 3	RR M.P. SUBDIVISION
DOT#:	CITY COUNTY STATE
DATE:	PROJECT NAME & LOCATION

General plan view should show:

a. Railroad right-of-way and North arrow.
b. Position of all Railroad tracks and identify each track as mainline, siding, spur, etc.
c. Spacing between all existing tracks.
d. Location of all access roadways, drainage ditches and direction of flow.
e. Footprint of proposed structure, proposed shoring system and any existing structures if applicable.
f. Proposed horizontal construction clearances. The minimum allowable is 12 feet measured at a right angle from centerline of track.
g. Location of existing and proposed utilities.
h. Drawings must be signed and stamped by a Licensed Professional Engineer, registered in the state where the work will be performed.
i. Railroad and other "CALL BEFORE YOU DIG" numbers.
j. Detailed view of shoring along with controlling elevations and dimensions.

DESIGN BY:	NAME & LOGO OF ENGINEERING FIRM OR PROJECT OWNER		
DRAWN BY:			
SCALE:	GENERAL PLAN VIEW		
DRAWING NO:			
SHEET: 2 OF 3	RR M.P.		SUBDIVISION
DOT#:	city	COUNTY	STATE
DATE:	PROJECT NAME & LOCATION		

Typical section and elevation should show:

a. Top of rail elevations for all tracks.
b. Offset from the face of shoring system to the centerline of all tracks at all changes in horizontal alignment.
c. All structural components, controlling elevations and dimensions of shoring system.
d. All drainage ditches and controlling dimensions.
e. All slopes, existing structures and other facilities which may surcharge the shoring system.
f. Location of all existing and proposed utilities.
g. Total depth of shoring system.

DESIGN BY:	NAME & LOGO OF ENGINEERING FIRM OR PROJECT OWNER		
DRAWN BY:			
SCALE:	TYPICAL SECTION & ELEVATION VIEW		
DRAWING NO:			
SHEET: 3 of 3	RR M.P.		SUBDIVISION
DOT#:	CITY	COUNTY	STATE
DATE:	PROJECT NAME & LOCATION		

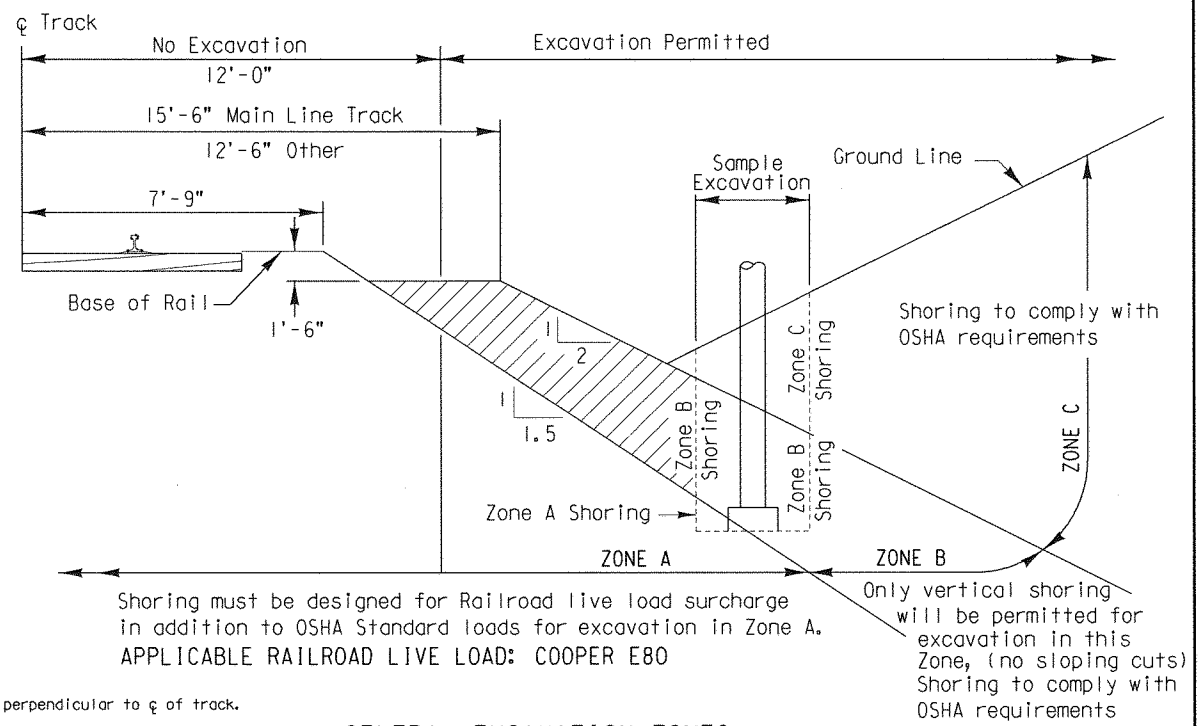

GENERAL NOTES:

All dimensions are measured perpendicular to ℄ of track.

Prior to commencing any work, the contractor shall submit for approval by the Railroad detailed plans indicating the nature and extent of the track protection shoring proposed. The contractor shall install the temporary shoring system per the approved plans. Design of the temporary shoring system to comply with **GUIDELINES FOR TEMPORARY SHORING.**

For excavations which encroach into zone A or B, shoring plans shall be accompanied by design calculations. Plans and calculations must be signed and stamped by a Professional Engineer registered in the state where the work will be performed.

GENERAL EXCAVATION ZONES

SCALE: (NOT TO SCALE)

REVISIONS		
DATE	LTR.	DESCRIPTION
5/03	1	FORMERLY UPRR C.E. 106613
/		
/		
/		
/		
/		

DESIGN BY: PGP | DRAWN BY: JFS | CHECKED BY: AA

APPROVED:

K.H. Jennison

BNSF - ASSISTANT DIRECTOR STRUCTURES DESIGN

George J. Mayer 9-1-04

UPRR - MGR SPECIAL PROJECTS STRUCTURES DESIGN

BRIDGE STANDARDS

GENERAL SHORING REQUIREMENTS

FILE OWNER: UPRR | DATE: 5-6-03

PLAN NO.: 710000 | SHEET: 1 OF 1

PLOTTED: $$$$DATE$$$ $TIME

Exhibit A

Attachment #2

Bid Proposal Sheet

Line No	Standard Item No	Section Headers	Item Description	Quantity	Unit	Group	Unit Price	Lumpsum	AltCode	Code
1	01.00001	GENERAL	Mobilization	1.0000	LS	Default	$0.0000	Y	Base Bid	N
2	01.01001	GENERAL	Const Staking	1.0000	LS	Default	$0.0000	Y	Base Bid	N
3	32.12001	EROSION CTRL	Coir Fiber Log	1,000.0000	LF	Default	$0.0000	N	Base Bid	N
4	32.12002	EROSION CTRL	Coir Fiber Log Maint	1,000.0000	LF	Default	$0.0000	N	Base Bid	N
5	32.03001	EROSION CTRL	Construction Entrance Surfacing	100.0000	TON	Default	$0.0000	N	Base Bid	N
6	50.00005	GENERAL	Temporary Shoring Zone A	600.0000	LF	Default	$0.0000	N	Base Bid	N
7	50.00005	GENERAL	Temporary Shoring Zone B	600.0000	LF	Default	$0.0000	N	Base Bid	N
8	50.00005	GENERAL	Chain Link Fence, 96" (In Place)	550.0000	LF	Default	$0.0000	N	Base Bid	N
9	50.00010	EARTHWORK	Soil Excavation	3,700.0000	CY	Default	$0.0000	N	Base Bid	N
10	50.00010	EARTHWORK	Soil Haul and Disposal PCB < 50 ppm	4,480.0000	TON	Default	$0.0000	N	Base Bid	N
11	50.00010	EARTHWORK	Soil Replacement and Compaction	3,700.0000	CY	Default	$0.0000	N	Base Bid	N
12	50.00015	GENERAL	2nd Mobilization	1.0000	LS	Default	$0.0000	Y	Base Bid	N
13	50.00015	GENERAL	Remove Fence	1.0000	LS	Default	$0.0000	Y	Base Bid	N

Exhibit A

Attachment #3

BNSF Geotechnical Requirements

for Embankment and Subgrade Construction

PREPARATION OF AREAS TO RECEIVE EMBANKMENT

A. In all areas to receive embankment all vegetation and other unsuitable materials shall be removed in accordance with the requirements stated above and as recommended in the project Geotechnical Engineering report. The resultant subgrade (outside of areas requiring subgrade stabilization prior to placement of compacted fill) shall be proof rolled with a loaded dump truck or similar piece of construction equipment having a maximum load of approximately 20 Kips per axel (1 Kip=1,000lbs) to locate any unsuitable materials. All unsuitable materials shall be either removed and replaced with controlled earth fill, or reworked to meet the requirements of compacted fill presented below ~~and as recommended in the project Geotechnical Engineering report.~~

B. Following the construction of a stable subgrade embankment areas can be filled to finished subgrade level with compacted fill materials.

PREPARATION OF AREAS TO RECEIVE EMBANKMENT

A. In all areas to receive embankment all vegetation and other unsuitable materials shall be removed in accordance with the requirements stated above ~~and as recommended in the project Geotechnical Engineering report~~. The resultant subgrade (outside of areas requiring subgrade stabilization prior to placement of compacted fill) shall be proof rolled with a loaded dump truck or similar piece of construction equipment having a maximum load of approximately 20 Kips per axel (1 Kip=1,000lbs) to locate any unsuitable materials. All unsuitable materials shall be either removed and replaced with controlled earth fill, or reworked to meet the requirements of compacted fill presented below and as ~~recommended in the project Geotechnical Engineering report.~~

B. Following the construction of a stable subgrade embankment areas can be filled to finished subgrade level with compacted fill materials.

PREPARATION OF AREAS TO RECEIVE EMBANKMENT

A. Rolling operations shall be continued until the embankment is compacted in accordance with the specified degree of compaction.

B. Compaction areas shall be kept separate, and no layer shall be covered by another until the specified degree of compaction and moisture requirements have been obtained. The moisture content and specified degree of compaction of a layer of compacted fill shall be maintained until the next lift is placed.

C. During construction of the embankment, the CONTRACTOR shall route his equipment at all times, both when loaded and when empty, over the layers as they are placed and shall distribute the travel evenly over the entire width of the embankment. The equipment shall be operated in such a manner that hardpan, cemented gravel, clay, or other chunky soil materials will be broken up into small particles and become incorporated with the other material in the layer.

D. In the construction of embankments, layer placement shall begin in the deepest portion of the fill; as placement progresses, layers shall be constructed approximately parallel to the finished track subgrade line.

E. Frozen material shall not be placed in the embankment nor shall embankment be placed upon frozen material.

F. There will be no separate measurement or payment for compacted embankment, and all costs incidental to placing in layers, compacting disking, watering, mixing, sloping, and other necessary operations for construction of embankments will be included in the contract price for unclassified excavation or borrow.

FINISHING AND PROTECTION OF SUBGRADE

A. After the subgrade has been substantially constructed to finished grade, the full width and length of the grade shall be conditioned by removing any soft or other unstable material which is unstable or not adequately compacted. The resulting areas and all other low areas, holes or depressions shall be brought to grade with acceptable compacted fill material. Scarifying, blading, rolling and other approved methods shall be performed to provide a thoroughly compacted subgrade ~~shaped to the lines and grades shown on the Contract Drawings.~~

B. Grading of the finished subgrade surface shall be performed to provide drainage off the track and service road subgrade in accordance with the lines and grade presented in the project plans. The CONTRACTOR shall take all precautions necessary to protect the subgrade from damage. The CONTRACTOR shall limit hauling over the finished subgrade to that which is essential for construction purposes.

C. All ruts or rough places that develop in a completed subgrade shall be smoothed, recompacted, if necessary, and finished graded to meet the project lines and grades specified in the project plans.

D. The moisture content and density shall be maintained within the specified limits until the subballast, pavement base materials or service road gravel materials have been placed.

~~B. No subballast, pavement, gravel surfacing, or topsoil shall be placed on the subgrade before obtaining approval of the BNSF or project Geotechnical Engineer for its placment.~~

COMPACTION REQUIREMENTS

EMBANKMENT FILL MOISTURE CONTENT & COMPACTION REQUIRMEMENTS

Location	*Soil* Type	Moisture Content	Minimum Compaction*
All areas except ditches	CL,ML,SM,SC	-1% TO +3% Of the Soils Optimum Moisture Content*	100%
Topsoil Material in Revegetated areas	Organic Soils	-	90%

* Maximum Dry Density and Optimum Moisture Content (ASTM D 698-00a, Procedure A)

A. Clean free-draining sand used as backfill should be consolidated by means of a vibratory compactor to at least 60% "relative density", as determined in accordance with ASTM D 4253-00 (Standard Test Methods for Maximum Index Density and Unit Weight of Soils Using a Vibratory Table) and D 4254 (Standard Test Methods for Minimum Index Density and Unit Weight of Soils and Calculations of Relative Density).

B. On all areas outside of the track bed, service road or paved road areas, no compaction will be required on the top 4 inches (100 mm).

C. The in-place field density shall be determined in accordance with ASTM D 1556, ASTM D 2167, or ASTM D 2922. Nuclear density equipment shall be calibrated according to ASTM D 2922.

D. The onsite borrow materials will be variable. Compaction and moisture content tests shall be conducted a minimum of one for every hour of fill placement or for each 2,000 S.Y. of each layer of compacted subgrade constructed, which ever is a greater number of tests.

Addendum #3
Alter Sliver Remediation for
West Haymarket JPA
Bid No. 11-268

Addenda are instruments issued by the City prior to the date for receipt of offers which will modify or interpret the specification document by addition, deletion, clarification or correction.

Please acknowledge receipt of this addendum in the space provided in the Attribute Section.

Be advised of the following changes and clarifications to the City's specification and bidding documents:

1. **Will soil disposal be subject to the City Occupational tax for garbage if it is hauled outside city limits?**

Ans. Based on the information provided by the Health Department, my understanding is the soil is considered a special waste. Therefore, the contractor will have to obtain a special waste permit and pay the occupation tax.

All other terms and conditions shall remain unchanged.

Dated this 20th day of December, 2011.

Vince M. Mejer
Purchasing Agent

Exhibit A

Addendum #4
Alter Sliver Remediation for
West Haymarket JPA
Bid No. 11-268

Addenda are instruments issued by the City prior to the date for receipt of offers which will modify or interpret the specification document by addition, deletion, clarification or correction.

Please acknowledge receipt of this addendum in the space provided in the Attribute Section.

Be advised of the following changes and clarifications to the City's specification and bidding documents:

1. **One of the bid items on this project list is coir fiber log, what size is the coir fiber log?**

Ans: Refer to City Standard Specifications, Chapter 32, Article 32.12 - Coir Fiber Log Revetments.

2. **Can I have a copy of the Pre-Bid Attendees List?**

Ans: The Pre-Bid Attendees List is attached to this Addendum.

All other terms and conditions shall remain unchanged.

Dated this 23rd day of December, 2011.

Vince M. Mejer
Purchasing Agent

Exhibit A

Pre-Bid Meeting - December 14, 2011
Alter Sliver Remediation
Spec No 11-268

1. Ron Imig General Excavating 402.467.1627
kimig@generalexcavating.com
2. Jeff McPeak Olsson Assoc 402-458-5909 jmcpeak@oaconsulting.com
3. Bill Imig Olsson Assoc 402-458-5903 bimig@oaconsulting.com
4. Ben Woods Land Construction 402-610-0412 ben@landconstruction.com
5. Gary Varley Land Const 402-610-0515 garyelandconstruction.com
6. Kirk Kraus Kingston Environmental 816-724-7963 Kirk.kraus@kingstonenv.com
7. RON BRUCK ESA, INC 402-708-7633 RBRUCK@ESASITE.COM
8. DAVE HRON EW WELLS GROUP LLC 214-397-8208 DAVE.HRON@wellsgroup.us
9. Tony A. Pinkey JCW Contracting, Inc 402-475-5030 tpinkey@jcwconstruction.com
10. Joseph M. Delgado JCW Contracting, Inc. 402-475-5030 jdelgado@jcw
11. Gerald Maczuya BNSF 402-458-7537 gerald.maczuya@bnsf.com
12. Brant Wells Beresh 402.360-6237 bwells@Beresh.com

EW WELLS GROUP
CONSTRUCTION DEMOLITION ENVIRONMENTAL

Dave Hron
Omaha District Manager
dhron@wellsgroup.us

11117 Mockingbird Drive
Omaha, NE, 68137
Office: 214.421.2700
Fax: 402.682.7499
Cell: 214-397-8208 wellsgroup.us

A Native American Indian Owned Company
8(a) CERTIFIED COMPANY HUBzone certified

Exhibit A

Advertise 3 time
Tuesday, December 6, 2011
Tuesday, December 13, 2011
Tuesday, December 20, 2011

NOTICE TO BIDDERS
SPECIFICATION NO. 11-268

Sealed bids will be received by the Purchasing Agent of the City of Lincoln/Lancaster County, Nebraska for the West Haymarket Joint Public Agency **BY ELECTRONIC BID PROCESS** until: **12:00 p.m, Tuesday, December 27, 2011** for the following project:

ALTER SLIVER REMEDIATION
FOR THE WEST HAYMARKET JPA

Bidders must be registered on the City/County's E-Bid site in order to respond to the above Bid. To Register go to: lincoln.ne.gov (type: e-bid - in search box, then click "Supplier Registration")

Once registered, vendors will receive e-mail bid notification, first acknowledging registration, then approval of registration. Upon e-mail notification of registration approval, you may go to the E-Bid site to respond to this bid. Questions concerning this bid process may be directed to City/County Purchasing at (402) 441-8309 or 441-7410 or vmejer@lincoln.ne.gov.

Exhibit A

EXHIBIT B

Temporary Construction and Access License,
First Amendment to Temporary Construction and Access License
and
Second Amendment to Temporary Construction and Access License

TEMPORARY CONSTRUCTION AND ACCESS LICENSE

THIS TEMPORARY CONSTRUCTION AND ACCESS LICENSE ("**License**") is made to be effective as of the ____ day of _____, 2011 ("**Effective Date**") by and between **BNSF RAILWAY COMPANY**, a Delaware corporation ("**Licensor**") and the **WEST HAYMARKET JOINT PUBLIC AGENCY**, a political subdivision of the State of Nebraska created by the Nebraska Joint Public Agency Act, Neb. Rev. Stat. § 13-2501 *et seq.* ("**Licensee**").

NOW THEREFORE, in consideration of the mutual covenants contained herein, the parties agree to the following:

1. GENERAL.

1.1 Licensor hereby grants Licensee a temporary non-exclusive license, subject to all rights, interests, and estates of third parties, including, without limitation, any leases, licenses, easements, liens or other encumbrances, and upon the terms and conditions set forth below, to use those three (3) areas of Licensor's property each labeled as "Temporary Access Road", generally located at Q, R, and T streets and shown as blue on **Exhibit M-1** attached hereto and incorporated herein by reference, situated at or near Lincoln, County of Lancaster, State of Nebraska, Line Segment 2, Mile Post 59.17 to 60.0 (collectively, the "**Premises**") for the purposes specified in **Section 1.3** below (the "**Permitted Uses**").

1.2 In the event the Permitted Uses will affect any improvements or facilities of Licensor or Licensor's existing lessees, licensees, easement beneficiaries, or lien holders (collectively "**Other Improvements**"), if any, or interfere with the use of the Other Improvements, Licensee will be responsible at Licensee's sole risk to locate and make any adjustments necessary to such Other Improvements. Licensee must contact the owner(s) of the Other Improvements notifying them of any work that may damage and/or interfere with the Other Improvements and obtain the owner's written approval prior to initiating any of the Permitted Uses.

1.3 Licensee shall use the Premises exclusively as a site for ingress and egress, site preparation approved by Licensor in writing in advance, and initial construction approved by Licensor in writing in advance (collectively, the "**Advance Construction**"). Licensee shall not use the Premises for any other purpose whatsoever. Licensee shall not use or store hazardous substances, as defined by the Comprehensive Environmental Response, Compensation, and Liability Act, as amended ("**CERCLA**") or petroleum or oil as defined by applicable Environmental Laws on the Premises.

1.4 Licensor and Licensee mutually agree that no construction activities for the Permitted Uses, nor future maintenance of any improvements which have a reasonable likelihood to delay train traffic on Licensor's main lines, will be permitted during the fourth quarter of each calendar year. Emergency work will be permitted only upon prior notification to Licensor's Network Operations Center (telephone number: 800 832-5452). Licensor and Licensee mutually understand and agree that trains cannot be subjected to delay during this time period.

1.5 In case of the eviction of Licensee by anyone owning or claiming title to or any interest in the Premises, Licensor shall not be liable to refund Licensee any compensation paid hereunder or for any damage Licensee sustains in connection therewith.

1.6 Any contractors or subcontractors performing work on the Premises, or entering the Premises on behalf of Licensee shall be deemed servants and agents of Licensee for purposes of this License.

2. **TERM**. This License shall commence on the Effective Date and, subject to prior termination as hereinafter described, shall continue until completion of the Permitted Uses, but in no event later than the date that is the earliest to occur of: (i) the end of the Development Period (as defined in the Master Agreement [defined below]), or (ii) December 31, 2014.

3. **COMPENSATION**.

3.1 Licensee shall pay Licensor, prior to the Effective Date, the sum of No Dollars ($0) as compensation for the use of the Premises.

3.2 Subject to the provisions of the C&M Agreement (as defined below) concerning Licensee's reimbursement of costs and expenses, including without limitation flagging costs, incurred by Licensor in connection with Licensee's use of the Premises, Licensee agrees to reimburse Licensor (within thirty (30) days after receipt of bills therefor) for all other costs and expenses incurred by Licensor in connection with Licensee's use of the Premises. All invoices are due thirty (30) days after the date of invoice. In the event that Licensee shall fail to pay any monies due to Licensor within thirty (30) days after the invoice date, then Licensee shall pay interest on such unpaid sum from thirty (30) days after its invoice date to the date of payment by Licensee at an annual rate equal to (i) the greater of (a) for the period January 1 through June 30, the prime rate last published in *The Wall Street Journal* in the preceding December plus two and one-half percent (2 1/2%), and for the period July 1 through December 31, the prime rate last published in *The Wall Street Journal* in the preceding June plus two and one-half percent (2 1/2%), or (b) twelve percent (12%), or (ii) the maximum rate permitted by law, whichever is less.

4. **COMPLIANCE WITH LEGAL REQUIREMENTS AND LICENSOR REQUIREMENTS.**

4.1 Licensee shall observe and comply with any and all laws, statutes, regulations, ordinances, orders, covenants, restrictions, or decisions of any court of competent jurisdiction (**"Legal Requirements"**) relating to the use of the Premises.

4.2 Prior to entering the Premises, Licensee shall and shall cause its contractor to comply with all of Licensor's applicable safety rules and regulations. Prior to commencing any work on the Premises, Licensee shall complete and shall require its contractor to complete the safety training program at the Website "http://contractororientation.com". This program must be completed no more than one year in advance of Licensee's entry on the Premises.

4.3 Licensee shall, at all times, comply with all provisions contained in that certain Construction and Maintenance Agreement between Licensor and Licensee dated February 1, 2011 (the "**C&M Agreement**"). In the event of conflicts between the terms of this License and the C&M Agreement, the most restrictive provisions shall apply to Licensee.

5. **DEFINITION OF COST AND EXPENSE**. For the purpose of this License, "cost" or "costs", "expense" or "expenses" includes, but is not limited to, actual labor and material costs including all assignable additives, and material and supply costs at current value where used.

6. **RIGHT OF LICENSOR TO USE**. Licensor excepts and reserves the right, to be exercised by Licensor and any other parties who may obtain written permission or authority from Licensor:

6.1 to maintain, renew, use, operate, change, modify and relocate any existing pipe, power, communication lines and appurtenances and other facilities or structures of like character upon, over, under or across the Premises;

6.2 to construct, maintain, renew, use, operate, change, modify and relocate any tracks or additional facilities or structures upon, over, under or across the Premises; or

6.3 to use the Premises in any manner as Licensor in its sole discretion deems appropriate, provided Licensor uses all commercially reasonable efforts to avoid material interference with the use of the Premises by Licensee for the Permitted Uses.

7. LICENSEE'S OPERATIONS.

7.1 Licensee shall notify Licensor's Project Engineer, Gerald Maczuga, at 201 N. 7th Street, Lincoln, NE 68508, telephone (402) 458-7537, at least ten (10) business days prior to initially entering the Premises and prior to entering the Premises for any subsequent maintenance thereon (if applicable). After completion of use of the Premises for the Permitted Uses, Licensee shall notify Licensor in writing that such use has been completed.

7.2 In performing the Permitted Uses, Licensee shall use only public roadways to cross from one side of Licensor's tracks to the other. In the event Licensee must cross from one side of Licensor's tracks to the other at a location or locations other than a public roadway, and such location or locations are approved by Licensor in advance, then Licensee shall enter into Licensor's Agreement for Private Crossing for each such private crossing location, each such Agreement for Private Crossing to be in the form attached to that certain Master Development Agreement between Licensor and Licensee dated February 1, 2011 (the "**Master Agreement**") as Exhibit UU.

7.3 Under no conditions shall Licensee be permitted to conduct any tests, investigations or any other activity using mechanized equipment and/or machinery, or place or store any mechanized equipment, tools or other materials, within twenty-five (25) feet of the centerline of any railroad track on the Premises unless Licensee has obtained prior written approval from Licensor. Licensee shall, at its sole cost and expense, perform all activities on and about the Premises in such a manner as not at any time to be a source of danger to or interference with the existence or use of present or future tracks, roadbed or property of Licensor, or the safe operation and activities of Licensor. If ordered to stop using the Premises at any time by Licensor's personnel due to any hazardous condition, Licensee shall immediately do so. Notwithstanding the foregoing right of Licensor, the parties agree that Licensor has no duty or obligation to monitor Licensee's use of the Premises to determine the safe nature thereof, it being solely Licensee's responsibility to ensure that Licensee's use of the Premises is safe. Neither the exercise nor the failure by Licensor to exercise any rights granted in this Section will alter the liability allocation provided by this License.

7.4 Licensee shall, at its sole cost and expense and subject to the supervision of Licensor's Roadmaster, complete the Advance Construction in such a manner that it will not at any time be a source of danger to or interference with the present or future tracks, roadbed and property of Licensor, or the safe operation of Licensor's railroad. If at any time Licensee shall, in the judgment of Licensor, fail to perform properly its obligations under this **Section 7.4**, Licensor may, at its option, itself perform such work as it deems necessary for the safe operation of its railroad, and in such event Licensee agrees to pay, within fifteen (15) days after bill shall have been rendered therefor, the cost so incurred by Licensor, but failure on the part of Licensor to perform the obligations of Licensee shall not release Licensee from liability hereunder for loss or damage occasioned thereby.

7.5 During the completion of the Advance Construction, Licensee shall perform such work in a manner to preclude damage to the property of Licensor, and preclude interference with

the operation of its railroad. The Advance Construction shall be completed within one (1) year of the Effective Date.

7.6 If at any time during the term of this License, Licensor shall desire the use of its rail corridor in such a manner as would, in Licensor's reasonable opinion, be interfered with by the Advance Construction, Licensee shall, at its sole expense, within thirty (30) days after receiving written notice from Licensor to such effect, make such changes in the Advance Construction as in the sole discretion of Licensor may be necessary to avoid interference with the proposed use of Licensor's rail corridor.

7.7 Prior to Licensee conducting any excavating or boring work on or about any portion of the Premises, Licensee shall explore the proposed location for such work with hand tools to a depth of at least three (3) feet below the surface of the ground to determine whether pipelines or other structures exist below the surface, provided, however, that in lieu of the foregoing, Licensee shall have the right to use suitable detection equipment or other generally accepted industry practice (*e.g.*, consulting with the Underground Services Association) to determine the existence or location of pipelines and other subsurface structures prior to drilling or excavating with mechanized equipment. Upon Licensee's written request, which shall be made thirty (30) business days in advance of Licensee's requested entry on the Premises, Licensor will provide Licensee any information that Licensor's Engineering Department has in its possession concerning the existence and approximate location of Licensor's underground utilities and pipelines on the Premises. Prior to conducting any such boring work, Licensee will review all such material. Licensor does not warrant the accuracy or completeness of information relating to subsurface conditions and Licensee's operations will be subject at all times to the liability provisions herein.

7.8 For all bores greater than 26-inch diameter and at a depth less than 10.0 feet below bottom of rail, a soil investigation will need to be performed by Licensee and reviewed by Licensor prior to construction. This study is to determine if granular material is present, and to prevent subsidence during the installation process. If the investigation determines in Licensor's reasonable opinion that granular material is present, Licensor may select a new location for Licensee's use, or may require Licensee to furnish for Licensor's review and approval, in its sole discretion a remedial plan to deal with the granular material. Once Licensor has approved any such remedial plan in writing, Licensee shall, at its sole cost and expense, carry out the approved plan in accordance with all terms thereof and hereof.

7.9 Any open hole, boring or well constructed upon Premises by Licensee shall be safely covered and secured at all times when Licensee is not working in the actual vicinity thereof. Following completion of that portion of the work, all holes or borings constructed on the Premises by Licensee shall be:

7.9.1 filled in to surrounding ground level with compacted bentonite grout; or

7.9.2 otherwise secured or retired in accordance with any applicable Legal Requirement. No excavated materials may remain on the Premises for more than ten (10) days, but must be properly disposed of by Licensee in accordance with applicable Legal Requirements.

7.10 Upon completion of Licensee's work on the Premises or upon termination of this License, whichever shall occur first, Licensee shall, at its sole cost and expense:

7.10.1 remove all of its equipment from the Premises;

7.10.2 report and restore any damage to the Premises arising from, growing out of, or connected with Licensee's use of the Premises;

7.10.3 remedy any unsafe conditions on the Premises created or aggravated by Licensee; and

7.10.4 leave the Premises in the condition which existed as of the Effective Date.

7.11 Licensee's on-site supervisors shall retain/maintain a fully-executed copy of this License at all times while on the Premises.

8. LIABILITY. During the term of this License, Licensee shall comply with all provisions contained in Sections 3.6 and 3.7 of the C&M Agreement, and all such provisions contained in Sections 3.6 and 3.7 of the C&M Agreement are hereby incorporated herein by reference.

9. PERSONAL PROPERTY WAIVER. ALL PERSONAL PROPERTY, INCLUDING, BUT NOT LIMITED TO, FIXTURES, EQUIPMENT, OR RELATED MATERIALS UPON THE PREMISES WILL BE AT THE RISK OF LICENSEE ONLY, AND LICENSOR WILL NOT BE LIABLE FOR ANY DAMAGE THERETO OR THEFT THEREOF, WHETHER OR NOT DUE IN WHOLE OR IN PART TO THE NEGLIGENCE OF LICENSOR.

10. INSURANCE. During the term of this License, Licensee shall comply with all provisions contained in Section 3.8 of the C&M Agreement, and all such provisions contained in Section 3.8 of the C&M Agreement are hereby incorporated herein by reference; provided, however, if any portion of the operation is to be subcontracted by Licensee, Licensee must require that Licensee's contractors provide and maintain the insurance coverages set forth in the C&M Agreement, naming Licensor as an additional insured; provided further, however, that policy limits for Commercial General Liability Insurance may be reduced to $2,000,000 per occurrence and an aggregate limit of $4,000,000, but in no event less than the amount otherwise carried by Licensee's contractors. In addition, Licensee must require that Licensee's contractors release, defend and indemnify Licensor to the same extent and under the same terms and conditions as Licensee is required to release, defend and indemnify Licensor in the C&M Agreement.

11. ENVIRONMENTAL.

11.1 Licensee shall strictly comply with all federal, state and local environmental laws and regulations in its use of the Premises, including, but not limited to, the Resource Conservation and Recovery Act, as amended (RCRA), the Clean Water Act, the Oil Pollution Act, the Hazardous Materials Transportation Act, CERCLA (collectively, the "**Environmental Laws**"). Licensee shall not maintain a treatment, storage, transfer or disposal facility, or underground storage tank, as defined by Environmental Laws on the Premises. Licensee shall not release or suffer the release of oil or hazardous substances, as defined by Environmental Laws on or about the Premises.

11.2 Licensee shall give Licensor immediate notice to Licensor's Resource Operations Center at (800) 832-5452 of any release of hazardous substances on or from the Premises, violation of Environmental Laws, or inspection or inquiry by governmental authorities charged with enforcing Environmental Laws with respect to Licensee's use of the Premises. Licensee shall use the best efforts to promptly respond to any release on or from the Premises. Licensee also shall give Licensor immediate notice of all measures undertaken on behalf of Licensee to investigate, remediate, respond to or otherwise cure such release or violation.

11.3 In the event that Licensor has notice from Licensee or otherwise of a release or violation of Environmental Laws arising in any way with respect to the Advance Construction which occurred or may occur during the term of this License, Licensor may require Licensee, at Licensee's sole risk and expense, to take timely measures to investigate, remediate, respond to or otherwise cure such release or violation affecting the Premises or Licensor's right-of-way.

11.4 Licensee shall promptly report to Licensor in writing any conditions or activities upon the Premises known to Licensee which create a risk of harm to persons, property or the environment and shall take whatever action is necessary to prevent injury to persons or property arising out of such conditions or activities; provided, however, that Licensee's reporting to Licensor shall not relieve Licensee of any obligation whatsoever imposed on it by this License. Licensee shall promptly respond to Licensor's request for information regarding said conditions or activities.

12. ALTERATIONS. Licensee may not make any alterations of the Premises or permanently affix anything to the Premises or any buildings or other structures adjacent to the Premises without Licensor's prior written consent.

13. NO WARRANTIES. LICENSOR'S DUTIES AND WARRANTIES ARE LIMITED TO THOSE EXPRESSLY STATED IN THIS LICENSE AND SHALL NOT INCLUDE ANY IMPLIED DUTIES OR IMPLIED WARRANTIES, NOW OR IN THE FUTURE. NO REPRESENTATIONS OR WARRANTIES HAVE BEEN MADE BY LICENSOR OTHER THAN THOSE CONTAINED IN THIS LICENSE. LICENSEE HEREBY WAIVES ANY AND ALL WARRANTIES, EXPRESS OR IMPLIED, WITH RESPECT TO THE PREMISES OR WHICH MAY EXIST BY OPERATION OF LAW OR IN EQUITY, INCLUDING, WITHOUT LIMITATION, ANY WARRANTY OF MERCHANTABILITY, HABITABILITY OR FITNESS FOR A PARTICULAR PURPOSE.

14. QUIET ENJOYMENT. LICENSOR DOES NOT WARRANT ITS TITLE TO THE PROPERTY NOR UNDERTAKE TO DEFEND LICENSEE IN THE PEACEABLE POSSESSION OR USE THEREOF. NO COVENANT OF QUIET ENJOYMENT IS MADE.

15. DEFAULT. If default shall be made in any of the covenants or agreements of Licensee contained in this License, Licensor may pursue any and all remedies set forth in Section 24 of the Master Agreement. The remedy set forth in this **Section 15** shall be in addition to, and not in limitation of, any other remedies that Licensor may have at law or in equity.

16. LIENS. Licensee shall promptly pay and discharge any and all liens arising out of any construction, alterations or repairs done, suffered or permitted to be done by Licensee on the Premises. Licensor is hereby authorized to post any notices or take any other action upon or with respect to the Premises that is or may be permitted by law to prevent the attachment of any such liens to the Premises; provided, however, that failure of Licensor to take any such action shall not relieve Licensee of any obligation or liability under this **Section 16** or any other Section of this License.

17. TERMINATION. If Licensee fails to surrender to Licensor the Premises, upon any termination of this License, all liabilities and obligations of Licensee hereunder shall continue in effect until the Premises are surrendered. Termination shall not release Licensee from any liability or obligation, whether of indemnity or otherwise, resulting from any events happening prior to the date of termination.

18. ASSIGNMENT. Neither Licensee, nor the heirs, legal representatives, successors or assigns of Licensee, nor any subsequent assignee, shall assign, transfer, sell, or hypothecate this

License or any interest herein (either voluntarily or by operation of law), without the prior written consent and approval of Licensor, which may be withheld in Licensor's sole discretion.

19. NOTICES. Any notice required or permitted to be given hereunder by one party to the other shall be in writing and the same shall be given and shall be deemed to have been served and given if (i) placed in the United States mail, certified, return receipt requested, or (ii) deposited into the custody of a nationally recognized overnight delivery service, addressed to the party to be notified at the address for such party specified below, or to such other address as the party to be notified may designate by giving the other party no less than thirty (30) days' advance written notice of such change in address.

If to Licensor: Jones Lang LaSalle Global Services - RR, Inc.
3017 Lou Menk Drive, Suite 100
Fort Worth, TX 76131
Attn: Licenses/Permits

with a copy to: BNSF Railway Company
2500 Lou Menk Dr. – AOB3
Fort Worth, TX 76131
Attn: Senior Manager Real Estate

If to Licensee: West Haymarket Joint Public Agency
c/o City of Lincoln, Nebraska
555 South 10th Street
Lincoln, NE 68508
Attn: City Attorney

20. SURVIVAL. Neither termination nor expiration will release either party from any liability or obligation under this License, whether of indemnity or otherwise, resulting from any acts, omissions or events happening prior to the date of termination or expiration, or, if later, the date when the Premises are restored to its condition as of the Effective Date.

21. RECORDATION. It is understood and agreed that this License shall not be filed of record with the Lancaster County, Nebraska Register of Deeds Office or otherwise recorded in the official records of Lancaster County, Nebraska.

22. APPLICABLE LAW. All questions concerning the interpretation or application of provisions of this License shall be decided according to the substantive laws of the State of Nebraska without regard to conflicts of law provisions.

23. VENUE. To the fullest extent permitted by law any dispute arising under or in connection with this License or related to any subject matter which is the subject of this License shall be subject to the sole and exclusive jurisdiction of the United States District Court for the District of Nebraska. The aforementioned choice of venue is intended by Licensor and Licensee to be mandatory and not permissive. Licensor and Licensee each hereby irrevocably consents to the jurisdiction of the United States District Court for the District of Nebraska in any such dispute and irrevocably waives, to the fullest extent permitted by law, any objection that it may now have or hereafter have to the laying of venue in such court and that any such dispute which is brought in such court has been brought in an inconvenient forum.

24. SEVERABILITY. To the maximum extent possible, each provision of this License shall be interpreted in such manner as to be effective and valid under applicable law, but if any provision of

this License shall be prohibited by, or held to be invalid under, applicable law, such provision shall be ineffective solely to the extent of such prohibition or invalidity, and this shall not invalidate the remainder of such provision or any other provision of this License.

25. INTEGRATION. This License is the full and complete agreement between Licensor and Licensee with respect to all matters relating to Licensee's use of the Premises, and supersedes any and all other agreements between the parties hereto relating to Licensee's use of the Premises as described herein. However, nothing herein is intended to terminate any surviving obligation of Licensee or Licensee's obligation to defend and hold Licensor harmless in any prior written agreement between the parties.

26. MISCELLANEOUS.

26.1 In the event that Licensee consists of two or more parties, all the covenants and agreements of Licensee herein contained shall be the joint and several covenants and agreements of such parties.

26.2 The waiver by Licensor of the breach of any provision herein by Licensee shall in no way impair the right of Licensor to enforce that provision for any subsequent breach thereof.

26.3 All provisions contained in this License shall be binding upon, inure to the benefit of, and be enforceable by the respective successors and assigns of Licensor and Licensee to the same extent as if each such successor and assign was named a party to this License.

[*Signature page follows*]

IN WITNESS WHEREOF, this License has been duly executed by the parties as of the date below each party's signature; to be effective, however, as of the Effective Date above.

LICENSOR:

BNSF Railway Company, a Delaware corporation

By: David P. Schneider

Name: David P. Schneider

Title: General Director – Land Revenue Management

Date: 4/15/2011

LICENSEE:

West Haymarket Joint Public Agency, a political subdivision of the State of Nebraska

By: _____

Dan Marvin, Project Manager/Secretary
West Haymarket Joint Public Agency

Date: 4/18/2011

Exhibit B

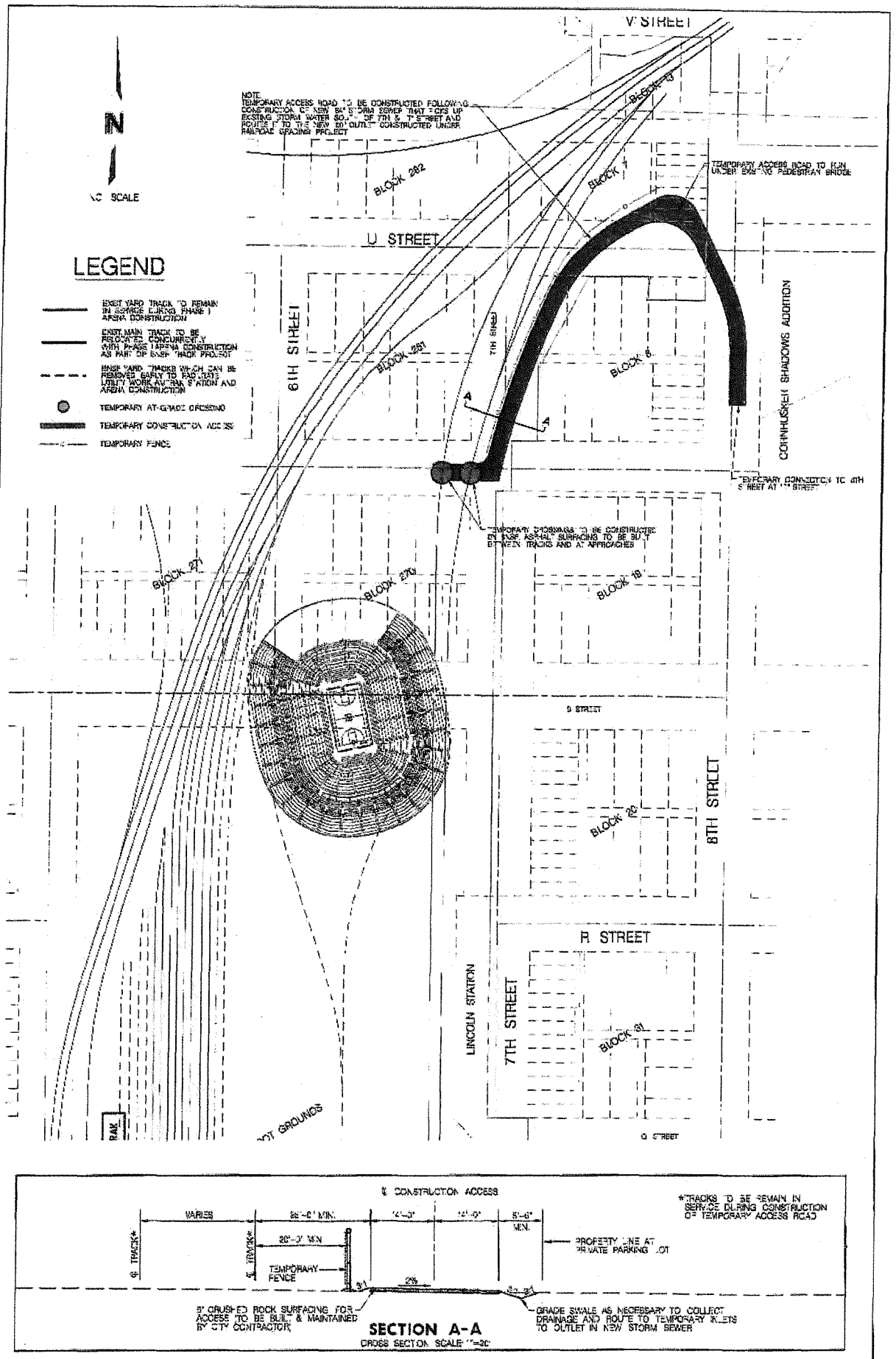

PROJECT NO: 008-0846 DRAWN BY: JGO DATE: 8/23/2010	TEMPORARY CONSTRUCTION ACCESS AT NORTH SIDE OF ARENA	OLSSON ASSOCIATES 1111 Lincoln Mall, Suite 111 P.O. Box 84608 Lincoln NE 68501-4608 TEL 402.474.6311 FAX 402.474.5160	EXHIBIT M-1

Exhibit B

FIRST AMENDMENT TO TEMPORARY CONSTRUCTION AND ACCESS LICENSE

THIS FIRST AMENDMENT TO TEMPORARY CONSTRUCTION AND ACCESS LICENSE ("**First Amendment**") is dated to be effective May ___, 2011 (the "**Effective Date**"), by and between **BNSF RAILWAY COMPANY**, a Delaware corporation, ("**Licensor**" or "**BNSF**"), and the **WEST HAYMARKET JOINT PUBLIC AGENCY**, a political subdivision of the State of Nebraska created by the Nebraska Joint Public Agency Act, Neb. Rev. Stat. § 13-2501 *et seq.* ("**Licensee**" or "**JPA**").

RECITALS

A. In an effort to strengthen the long-term economic and physical viability of the West Haymarket District and Downtown Lincoln, and in support of the plans of the City (defined below) and JPA to construct entertainment, recreation, lodging, offices, retail and/or other complementary and/or supporting facilities (collectively, the "**West Haymarket Project**"), BNSF and the City of Lincoln, Nebraska, a Nebraska municipal corporation ("**City**") entered into, among other agreements, that certain Exchange Agreement dated October 18, 2010 (as amended from time to time, the "**Exchange Agreement**").

B. Pursuant to the provisions of that certain Consent to Assignment and Assumption Agreement dated October 19, 2010, BNSF consented to City's assignment and transfer of its right, title and interest in and to the Exchange Agreement to JPA.

C. Pursuant to Section 11.1.1.2 and Exhibit F-2 of the Exchange Agreement, JPA is obligated to complete certain obligations as described in Section 11.1.1.2 and Exhibit F-2 of the Exchange Agreement. Pursuant to that certain Second Amendment to Exchange Agreement between BNSF and JPA of even date herewith, JPA will not complete its obligations described in Section 11.1.1.2(b) and Exhibit F-2 of the Exchange Agreement before the Second BNSF Closing (as defined in the Exchange Agreement). As a result, BNSF and JPA are entering into this First Amendment to ensure JPA has access to BNSF's property in order to complete such JPA obligations.

D. BNSF and JPA entered into that certain Temporary Construction and Access License dated April 18, 2011 (the "**Original Access License**"). The Original Access License as modified by the provisions of this First Amendment hereof shall be referred to herein as the "**Access License**".

E. BNSF and JPA desire to amend the Original Access License as set forth below.

AGREEMENTS

NOW, THEREFORE, in consideration of the mutual covenants contained herein, and for other good and valuable consideration, the receipt and sufficiency of which are hereby acknowledged, the parties agree as follows:

Section 1. Premises.

A. Section 1.1 of the Original Access License is hereby deleted and replaced with the following:

" 1.1 Licensor hereby grants Licensee a temporary non-exclusive license, subject to all rights, interests, and estates of third parties, including, without limitation, any leases, licenses, easements, liens or other encumbrances, and upon the terms and conditions set forth below, to use (i) that real property shown on **Exhibit "A"** attached hereto and incorporated herein by reference, and (ii) those three (3) areas of Licensor's property each labeled as "Temporary Access Road", generally located at Q, R, and T streets and shown as blue on **Exhibit J-2** attached hereto and incorporated herein by

reference, situated at or near Lincoln, County of Lancaster, State of Nebraska, Line Segment 2, Mile Post 59.17 to 60.0 (collectively, items (i) and (ii) shall be referred to as the "**Premises**") for the purposes specified in **Section 1.3** below (the "**Permitted Uses**")."

B. Effective immediately, **Exhibit "A"** attached hereto and incorporated herein by reference is attached to the Original Access License as Exhibit "A".

Section 2. **Permitted Uses.** Effective immediately, Section 1.3 of the Original Access License is hereby deleted and replaced with the following:

" 1.3 Licensee shall use that portion of the Premises shown on **Exhibit "A"** attached hereto exclusively as a site for ingress and egress, and testing and remediation approved by Licensor in writing in advance to fulfill Licensee's obligations under Section 11.1.1.2 and Exhibit F-2 of the Exchange Agreement, and shall use that portion of the Premises shown on **Exhibit J-2** attached hereto exclusively as a site for ingress and egress, site preparation approved by Licensor in writing in advance, and initial construction approved by Licensor in writing in advance (collectively, the "**Advance Construction**"). Licensee shall not use the Premises for any other purpose whatsoever. Licensee shall not use or store hazardous substances, as defined by the Comprehensive Environmental Response, Compensation, and Liability Act, as amended ("**CERCLA**") or petroleum or oil as defined by applicable Environmental Laws on the Premises."

Section 3. **Ratification.** Unless otherwise provided herein, all capitalized and/or defined terms herein shall have the same meaning given to such capitalized and/or defined terms in the Original Access License. Except as amended hereby, all of the terms and provisions of the Original Access License are hereby reaffirmed and remain in full force and effect. In the event there is a conflict between the terms and provisions of the Original Access License and the terms and provisions of this First Amendment, the terms and provisions of this First Amendment shall control.

Section 4. **No Licensor Default.** Licensee agrees that Licensor is not currently in default under the Access License, nor does any condition exist which, with the passage of time alone, could constitute a default under the Access License. Licensee agrees to fully and forever release and discharge Licensor from any claim whatsoever relating to any period covered by the Access License prior to the Effective Date above.

Section 5. **Miscellaneous.** This First Amendment (i) shall be binding upon and inure to the benefit of Licensee and Licensor and their respective legal representatives, successors and assigns; (ii) may be modified or amended only by a writing signed by each party hereto; and (iii) may be executed in multiple counterparts, each of which shall, for all purposes, be deemed an original but which together shall constitute one and the same instrument, and the signature pages from any counterpart may be appended to any other counterpart to assemble fully executed documents, and counterparts of this First Amendment may also be exchanged via electronic facsimile machines and any electronic facsimile of any party's signature shall be deemed to be an original signature for all purposes.

[Signature page follows]

IN WITNESS WHEREOF, Licensor and Licensee have executed this First Amendment as of the date below each party's signature; to be effective, however, as of the Effective Date above.

LICENSOR:

BNSF Railway Company, a Delaware corporation

By: _____

Name: _____

Title: _____

Date: _____

LICENSEE:

West Haymarket Joint Public Agency, a Nebraska joint public agency

By: _____

Name: JAYNE SNYDER

Title: Chair

Date: 5-10-2011

counterpart may be appended to any other counterpart to assemble fully executed documents, and counterparts of this First Amendment may also be exchanged via electronic facsimile machines and any electronic facsimile of any party's signature shall be deemed to be an original signature for all purposes.

IN WITNESS WHEREOF, Licensor and Licensee have executed this First Amendment as of the date below each party's signature; to be effective, however, as of the Effective Date above.

LICENSOR:

BNSF Railway Company, a Delaware corporation

By: _____

Name: Mark D. Ude

Title: Assistant Vice President Corporate Real Estate Development

Date: _____

LICENSEE:

West Haymarket Joint Public Agency, a Nebraska joint public agency

By: _____

Name: _____

Title: _____

Date: _____

EXHIBIT "A"

Additional Property

Tract 5

Parcel 1:

That portion of the parcel of land described in Inst. No. 99-018153 composed of a portion of Lots 10 through 12, Block 81, Original Town, Lincoln, Lancaster County, Nebraska, and more particularly described as follows:

Commencing from the Northeast corner of said Lot 12, said point being the true point of beginning; thence on an assumed bearing of South 00 degrees 15 minutes 32 seconds West, along the East line of said Lot 12, said line also being the West right-of-way line of 5th Street, a distance of 63.84 feet to a point; thence South 27 degrees 25 minutes 15 seconds West, a distance of 88.00 feet to a point on the South line of said Lot 12; thence North 89 degrees 43 minutes 34 seconds West, along the South line of said Lots 12, 11 and 10, said line also being the North right-of-way line of "L" Street, a distance of 69.83 feet to a point on the West line of the parcel of land described in Inst. No. 99-018153; thence North 34 degrees 44 minutes 50 seconds East, along the West line of said parcel of land described in Inst. No. 99-018153, a distance of 172.43 feet to a point on the North line of said Lot 12; thence South 89 degrees 43 minutes 50 seconds East, along the North line of said Lot 12, a distance of 12.37 feet to the point of beginning.

Parcel 2:

That portion of the parcel of land described in Inst. No. 99-018153 composed of a portion of Lots 2 through 4, Block 106, Original Town, Lincoln, Lancaster County, Nebraska, and more particularly described as follows:

Commencing from the Northwest corner of Block 106, Original Town; thence on an assumed bearing of South 89 degrees 43 minutes 34 seconds East, along the North line of said Block 106, said line also being the South right-of-way line of "L" Street, a distance of 132.01 feet to a point on the West line of the parcel of land described in Inst. No. 99-018153, said point also being the true point of beginning; thence continuing South 89 degrees 43 minutes 34 seconds East, along the North line of said Block 106, said line also being the South right-of-way line of "L" Street, a distance of 76.54 feet to a point; thence South 27 degrees 25 minutes 15 seconds West, a distance of 40.49 feet to a point on the Southeasterly line of the parcel of land described in Inst. No. 99-018153; thence South 49 degrees 58 minutes 21 seconds West, along the Southeasterly line of said parcel of land described in Inst. No. 99-018153, a distance of 52.53 feet to the Southeast corner of said parcel of land described in Inst. No. 99-018153; thence North 89 degrees 43 minutes 34 seconds West, along the South line of said parcel of land described in Inst. No. 99-018153, a distance of 50.02 feet to the Southwest corner of said parcel of land described in Inst. No. 99-018153; thence North 24 degrees 50 minutes 45 seconds East, along the Westerly line of said parcel of land described in Inst. No. 99-018153, a distance of 76.97 feet to the point of beginning.

Tract 6

Parcel G:

A tract of land composed of a portion of "M" Street right-of-way, a portion of 5th Street right-of-way, and a portion of the East/West Alley in Block 81, Original Town, all located in the Northwest Quarter of Section 26, Township 10 North, Range 6 East of the 6th P.M., Lancaster County, City of Lincoln, Nebraska, and is more particularly described as follows:

Commencing from the Southwest corner of Block 74, Original Town, thence on an assumed bearing of South 89 degrees 44 minutes 06 seconds east, along the South line of said Block 74, a distance of 182.39 feet to the true point of beginning; thence continuing South 89 degrees 44 minutes 06 seconds East, along the South line of said Block 74 and along the South line of Block 73, Original Town, said line also being the North right-of-way line of said "M" Street, a distance of 274.69 feet to a point; thence South 11 degrees 36 minutes 56 seconds West, a distance of 27.08 feet to a point; thence South 27 degrees 25 minutes 15 seconds West, a distance of 82.55 feet to a point on the North line of Block 82, Original Town; thence North 89 degrees 44 minutes 06 seconds West, along the North line of said Block 82, said line also being the South right-of-way line of said "M" Street, a distance of 13.89 feet to the Northwest corner of said Block 82; thence South 00 degrees 15 minutes 32 seconds West, along the West line of said Block 82, said line also being the East right-of-way line of 5th street, a distance of 27.08 feet to a point; thence South 27 degrees 25 minutes 15 seconds West, a distance of 219.06 feet to a point on the East line of Block 81, Original Town; thence North 00 degrees 15 minutes 32 seconds East, along the East line of said Block 81, said line also being the West right-of-way line of said 5th Street, a distance of 63.84 feet to the Northeast corner of Lot 12, of said Block 81; thence North 89 degrees 43 minutes 50 seconds West, along the South right-of-way line of the East/West Alley in said Block 81, a distance of 208.37 feet to a point of curvature; thence Northeasterly a distance of 17.35 feet along a non-tangent curve to the left having a radius of 2,170.35 Feet, a central angle of 00 degrees 27 minutes 28 seconds, with a chord bearing of North 22 degrees 58 minutes 55 seconds East, and a chord distance of 17.35 feet to a point on the North right-of-way line of said East/West alley in said Block 81; thence South 89 degrees 43 minutes 50 seconds East, along the North right-of-way line of said East/West alley in said Block 81, a distance of 201.67 feet to the Southeast corner of Lot 1, in said Block 81; thence North 00 degrees 15 minutes 32 seconds East, along the East line of said Block 81, said line also being the West right-of-way line of said 5th Street, a distance of 142.15 feet to the Northeast corner of said Lot 1; thence North 89 degrees 44 minutes 06 seconds West, along the North line of said Block 81, said line also being the South right-of-way line of said "M" Street, a distance of 148.56 feet to a point of curvature; thence Northeasterly a distance of 104.64 feet along a non-tangent curve to the left having a radius of 2,170.35 feet, a central angle of 02 degrees 45 minutes 44 seconds, with a chord bearing of North 17 degrees 21 minutes 56 seconds East, and a chord distance of 104.63 feet to the point of beginning.

Parcel H:

A tract of land composed of a portion of "L" Street right-of-way, located in the Northwest Quarter of Section 26, Township 10 North, Range 6 East of the 6th P.M., Lancaster County, City of Lincoln, Nebraska, and is more particularly described as follows:

Commencing from the Northwest corner of Block 106, Original Town, said point being the true point of beginning; thence North 00 degrees 14 minutes 46 seconds East, along the East right-of-way line of 4th Street, a distance of 51.97 feet to a point of curvature; thence Northeasterly a distance of

54.30 feet along a non-tangent curve to the left having a radius of 2,170.34 feet, a central angle of 1 degrees 26 minutes 00 seconds, with a chord bearing of North 28 degrees 04 minutes 07 seconds East, and a chord distance of 54.30 feet to a point on the South Line of Block 81, Original Town; thence South 89 degrees 43 minutes 34 seconds East, along the South line of said Block 81, said line also being the North right-of-way line of said "L" Street, a distance of 234.53 feet to a point; thence South 27 degrees 25 minutes 15 seconds West, a distance of 112.38 feet to a point on the North line of said Block 106; thence North 89 degrees 43 minutes 34 seconds West, along the North line of said Block 106, said line also being the South right-of-way line of "L" Street, a distance of 208.55 feet to the point of beginning.

Parcel I:

A tract of land composed of a portion of the East/West alley in Block 106, Original Town, located in the Northwest Quarter of Section 26, Township 10 North, Range 6 East of the 6th P.M., Lancaster County, City of Lincoln, Nebraska, and is more particularly described as follows:

Commencing from the Southwest corner of Lot 6, Block 106, Original Town, said point being the true point of beginning; thence South 89 degrees 43 minutes 25 seconds East, along the North right-of-way line of the East/West alley in said Block 106, a distance of 135.82 feet to a point; thence South 27 degrees 25 minutes 15 seconds West, a distance of 17.98 feet to a point on the south right-of-way line of said East/West alley in said Block 106; thence North 89 degrees 43 minutes 25 seconds West, along the South right-of-way line of said East/West alley in said Block 106, a distance of 127.63 feet to the Northwest corner of Lot 7, in said Block 106; thence North 00 degrees 18 minutes 04 seconds East, along the East right-of-way line of 4th Street, a distance of 16.00 feet to the point of beginning.

SECOND AMENDMENT TO TEMPORARY CONSTRUCTION AND ACCESS LICENSE

THIS SECOND AMENDMENT TO TEMPORARY CONSTRUCTION AND ACCESS LICENSE ("**Second Amendment**") is dated to be effective December ___, 2011 (the "**Effective Date**"), by and between **BNSF RAILWAY COMPANY**, a Delaware corporation, ("**Licensor**" or "**BNSF**"), and the **WEST HAYMARKET JOINT PUBLIC AGENCY**, a political subdivision of the State of Nebraska created by the Nebraska Joint Public Agency Act, Neb. Rev. Stat. § 13-2501 *et seq.* ("**Licensee**" or "**JPA**").

RECITALS

A. In an effort to strengthen the long-term economic and physical viability of the West Haymarket District and Downtown Lincoln, and in support of the plans of the City (defined below) and JPA to construct entertainment, recreation, lodging, offices, retail and/or other complementary and/or supporting facilities (collectively, the "**West Haymarket Project**"), BNSF and the City of Lincoln, Nebraska, a Nebraska municipal corporation ("**City**") entered into, among other agreements, that certain Exchange Agreement dated October 18, 2010 (as amended from time to time, the "**Exchange Agreement**").

B. Pursuant to the provisions of that certain Consent to Assignment and Assumption Agreement dated October 19, 2010, BNSF consented to City's assignment and transfer of its right, title and interest in and to the Exchange Agreement to JPA.

C. BNSF and JPA entered into that certain Temporary Construction and Access License dated April 18, 2011 (the "**Original Access License**"). BNSF and JPA also entered into that certain First Amendment to Temporary Construction and Access License dated May 12, 2011. The Original Access License as modified by the provisions of the First Amendment and this Second Amendment hereof shall be referred to herein as the "**Access License**".

D. BNSF and JPA desire to amend the Original Access License as set forth below.

AGREEMENTS

NOW, THEREFORE, in consideration of the mutual covenants contained herein, and for other good and valuable consideration, the receipt and sufficiency of which are hereby acknowledged, the parties agree as follows:

Section 1. **Premises.** Section 1.1 of the Original Access License is hereby deleted and replaced with the following:

> " 1.1 Licensor hereby grants Licensee a temporary non-exclusive license, subject to all rights, interests, and estates of third parties, including, without limitation, any leases, licenses, easements, liens or other encumbrances, and upon the terms and conditions set forth below, to use (i) that real property shown on **Figure 1** attached hereto and incorporated herein by reference, and (ii) those four (4) areas of property owned or controlled by Licensor each labeled as "Temporary Access Road", generally located at N, Q, R, and T streets and shown as blue on **Exhibit J-2** dated September 28, 2010, attached hereto and incorporated herein by reference, situated at or near Lincoln, County of Lancaster, State of Nebraska, Line Segment 2, Mile Post 59.17 to 60.0 (collectively, items (i) and (ii) shall be referred to as the "**Premises**") for the purposes specified in **Section 1.3** below (the "**Permitted Uses**")."

Section 2. **Permitted Uses.**

2.1 In addition to the permitted uses described in Section 1.3 of the Original Access License, Licensor and Licensee hereby acknowledge and agree that the Advance Construction shall also include (i) soil excavation, as determined to be necessary or desirable by Licensor and/or Licensee's remediation work and

testing, and (ii) Licensee's use of trucks in the route depicted on **Figure 1** attached hereto and incorporated herein by reference, such route to be no closer than fifteen (15) feet to the nearest rail. Such trucks shall be used solely to remove debris and contaminated soil in support of the West Haymarket Project and to bring in construction material and replacement fill soil.

2.2 In addition to and not in limitation of Licensee's other safety requirements contained in the C&M Agreement and the Access License, Licensee shall use proper shoring requirements for all excavations on and adjacent to the Premises, including all of Licensor's shoring requirements.

2.3 Licensor acknowledges and agrees that flagging will be required for the excavation and truck movement described herein, and Licensee shall reimburse Licensor for all such flagging, pursuant to the provisions of Section 3.2 of the Original Access License.

Section 3. Ratification. Unless otherwise provided herein, all capitalized and/or defined terms herein shall have the same meaning given to such capitalized and/or defined terms in the Original Access License. Except as amended hereby, all of the terms and provisions of the Original Access License are hereby reaffirmed and remain in full force and effect. In the event there is a conflict between the terms and provisions of the Original Access License and the terms and provisions of this Second Amendment, the terms and provisions of this Second Amendment shall control.

Section 4. No Licensor Default. Licensee agrees that Licensor is not currently in default under the Access License, nor does any condition exist which, with the passage of time alone, could constitute a default under the Access License. Licensee agrees to fully and forever release and discharge Licensor from any claim whatsoever relating to any period covered by the Access License prior to the Effective Date above.

Section 5. Miscellaneous. This Second Amendment (i) shall be binding upon and inure to the benefit of Licensee and Licensor and their respective legal representatives, successors and assigns; (ii) may be modified or amended only by a writing signed by each party hereto; and (iii) may be executed in multiple counterparts, each of which shall, for all purposes, be deemed an original but which together shall constitute one and the same instrument, and the signature pages from any counterpart may be appended to any other counterpart to assemble fully executed documents, and counterparts of this Second Amendment may also be exchanged via electronic facsimile machines and any electronic facsimile of any party's signature shall be deemed to be an original signature for all purposes.

[Signature page follows]

IN WITNESS WHEREOF, Licensor and Licensee have executed this Second Amendment as of the date below each party's signature; to be effective, however, as of the Effective Date above.

LICENSOR:

BNSF Railway Company, a Delaware corporation

By: _____

Name: _____

Title: _____

Date: _____

LICENSEE:

West Haymarket Joint Public Agency, a Nebraska joint public agency

By: _____

Name: _____

Title: _____

Date: _____

F:\Projects\010-1633_GOHYgis\Final Alter Maps.mxd

PROJECT: 010-1633	BNSF TRANSFER PROPERTY LINCOLN, NEBRASKA	OLSSON ASSOCIATES	FIGURE
DRAWN BY: RD			1
DATE: NDecember 3, 2011			

Exhibit B

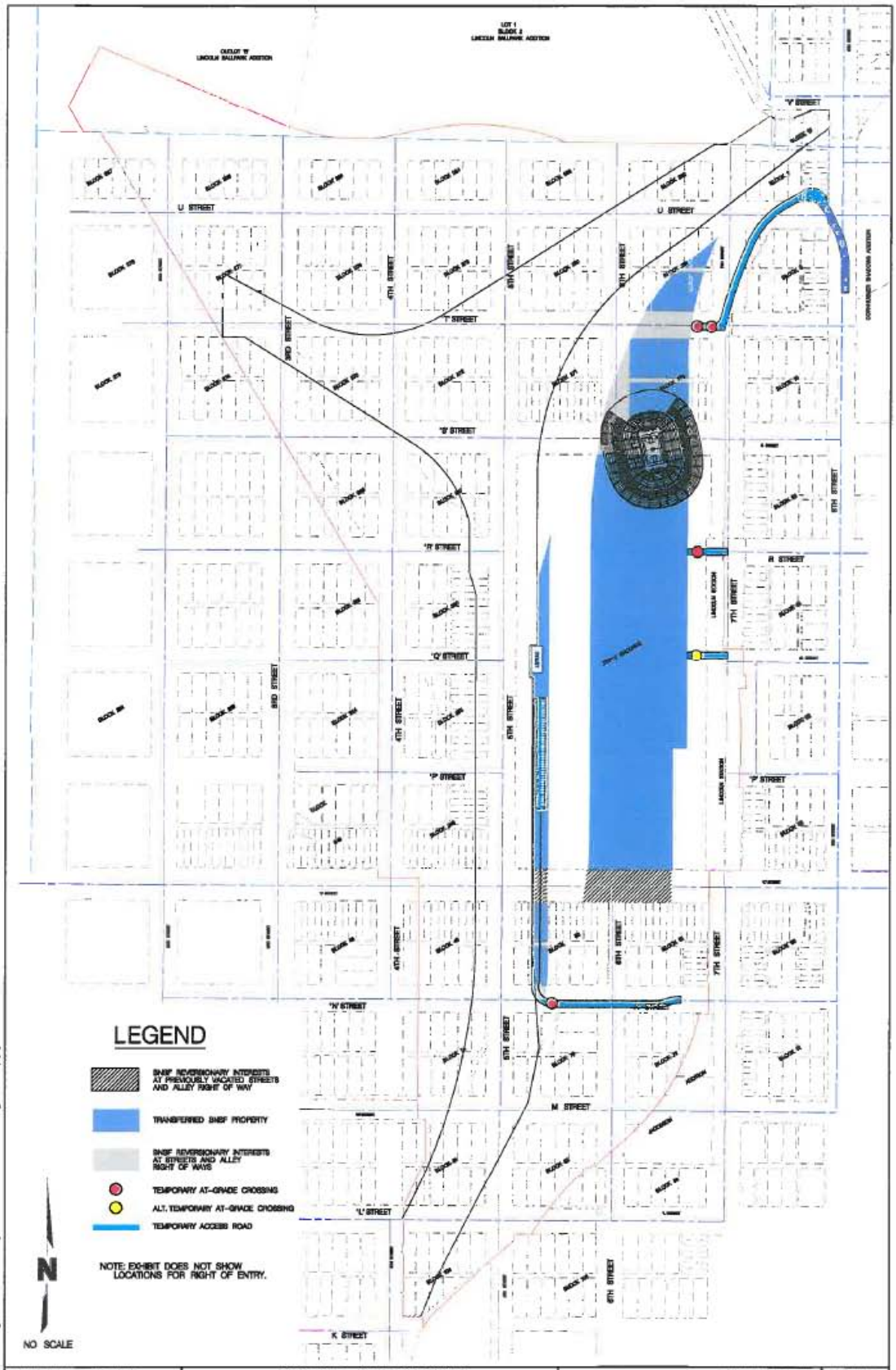
LEGEND
BNSF REVERSIONARY INTERESTS AT PREVIOUSLY VACATED STREETS AND ALLEY RIGHT OF WAY
TRANSFERRED BNSF PROPERTY
BNSF REVERSIONARY INTERESTS AT STREETS AND ALLEY RIGHT OF WAYS
TEMPORARY AT-GRADE CROSSING
ALT. TEMPORARY AT-GRADE CROSSING
TEMPORARY ACCESS ROAD
NOTE: EXHIBIT DOES NOT SHOW LOCATIONS FOR RIGHT OF ENTRY.
N
NO SCALE
U STREET
T STREET
S STREET
R STREET
Q STREET
P STREET
N STREET
M STREET
L STREET
K STREET
3RD STREET
4TH STREET
5TH STREET
6TH STREET
7TH STREET
8TH STREET
LINCOLN BOULEVARD
PROJECT NO: 008-0645
DRAWN BY: JGO
DATE: 9/28/2010
SECOND CITY CLOSING FOR INITIAL ARENA AND AMTRAK CONSTRUCTION
OLSSON ASSOCIATES
EXHIBIT
J-2

Exhibit B

EXHIBIT C

Construction and Maintenance Agreement
Between BNSF and the City of Lincoln

A- 86070

CONSTRUCTION AND MAINTENANCE AGREEMENT

THIS CONSTRUCTION AND MAINTENANCE AGREEMENT ("**C&M Agreement**") is made to be *effective the 18th day of October, 2010* ("***Effective Date***"), *by and between* **BNSF RAILWAY COMPANY**, a Delaware corporation ("**BNSF**"), and the **CITY OF LINCOLN, NEBRASKA**, a Nebraska municipal corporation ("**City**"). City and BNSF, respectively, are sometimes referred to in this C&M Agreement each as a "**Party**" and collectively, as the "**Parties**".

RECITALS

A. BNSF owns and operates a line of railroad in and through the City of Lincoln, State of Nebraska

B In an effort to strengthen the long-term economic and physical viability of the West Haymarket District and Downtown Lincoln, City plans to construct entertainment, recreation, lodging, offices, retail and/or other complementary and/or supporting facilities (collectively, the "**West Haymarket Project**") in the area shown on the map attached hereto as **Exhibit A** and incorporated herein by reference ("**Project Area**") The West Haymarket Project will include, among other things, an approximately 16,000-seat arena (the "**Arena**"), an ice center facility (the "**Ice Center**"), a district energy facility, and upgrades to parking, utilities, and surface transportation access to the area.

C. City and BNSF have entered into that certain Master Development Agreement of even date *herewith (the "**Master Agreement**"). In connection with certain economic development objectives of City* as set forth in the Master Agreement, City desires that BNSF grant certain permanent or temporary license and/or easement rights to City and certain third parties (each a "**Right of Entry**" and, in multiples, "**Rights of Entry**") for certain activities on BNSF's Property (defined below) (each a "**Right of Entry Work**" and collectively, "**Rights of Entry Work**"). For the purposes of this C&M Agreement, the term "BNSF's Property" shall mean the applicable Existing BNSF Property, Retained BNSF Property, and/or Replacement BNSF Property which is under BNSF ownership at the time work is done under the Right of Entry. All capitalized terms not defined herein shall have the same meaning as in the Master Agreement.

AGREEMENTS

NOW, THEREFORE, in consideration of the mutual covenants and agreements of the Parties contained herein, the receipt and sufficiency of which are hereby acknowledged, the Parties agree as follows.

ARTICLE I – CITY C&M WORK. The provisions of this C&M Agreement, in addition to and not in limitation of the provisions contained in the applicable Rights of Entry, shall apply with respect to the Rights of Entry Work and any other construction, maintenance, Operation (as defined in the Master Agreement), or other work being performed on or adjacent to BNSF property by or for City (collectively, the "**City C&M Work**"). In the event of conflicts between the terms of this C&M Agreement and any applicable Right of Entry agreement, the most restrictive provisions shall apply to City.

ARTICLE II – BNSF OBLIGATIONS. In consideration of the covenants of City set forth herein and the faithful performance thereof, BNSF agrees to do the following:

2.1 Grant to City the following temporary Rights of Entry in accordance with and as described in Section 3.2 of the Master Agreement:

2.1.1 The Temporary Access License for Initial Construction as defined and described in Section 3.2.1 of the Master Agreement and attached thereto as Exhibit EE;

2.1.2 The Temporary Grading License for Storm Water Mitigation as defined and described in Section 3.2.2(a) of the Master Agreement and attached thereto as Exhibit FF-1;

2.1.3 The Temporary Access License for Soil Staging as defined and described in Section 3.2.3 of the Master Agreement and attached thereto as Exhibit GG;

2.1.4 The Temporary Access License for Construction Staging - Pedestrian Bridge as defined and described in Section 3.2.4(a) of the Master Agreement and attached thereto as Exhibit HH-1;

2.1.5 The Temporary Access License for Amtrak Work as defined and described in Section 3.2.5 of the Master Agreement and attached thereto as Exhibit II;

2.1.6 The Temporary Grading License for Arena Drive and Parking Lot Construction as defined and described in Section 3.2.9 of the Master Agreement and attached thereto as Exhibit KK;

2.1.7 The Temporary Access License for Survey / Geotech / Environmental Activities as defined and described in Section 3.2.11(a) of the Master Agreement and attached thereto as Exhibit BB;

2.1.8 The Crossing Agreements as defined and described in Section 3.2.12 of the Master Agreement and attached thereto as Exhibit UU.

2.1.9 The Temporary Construction and Access License for Sanitary Sewer Work as defined and described in Section 3.2.11(b) of the Master Agreement and attached thereto as Exhibit BB-1.

2.2 Grant to City the following permanent Rights of Entry in accordance with and as described in Section 3.2 of the Master Agreement:

2.2.1 The Storm Water Mitigation Easement as defined and described in Section 3.2.2(b) of the Master Agreement and attached thereto as Exhibit FF;

2.2.2 The Pedestrian Bridge Easement as defined and described in Section 3.2.4(b) of the Master Agreement and attached thereto as Exhibit HH; and

2.2.3 The City Utility Easements as defined and described in Section 3.2.7 of the Master Agreement and attached thereto as Exhibit TT and Exhibit TT-1.

2.2.4 The 2nd & J Utility Easement as defined and described in Section 3.2.10 of the Master Agreement and attached thereto as Exhibit TT.

2.3 Grant to City the Security Fencing License in accordance with and as defined and described in Section 3.2.8 of the Master Agreement and attached thereto as Exhibit JJ.

ARTICLE III – CITY OBLIGATIONS

3.1 Plans.

3.1.1 If any City C&M Work is not included in the City Work Final Design (as defined in the Master Agreement), City must furnish to BNSF four sets of plans and specifications for such City C&M Work (reduced size 11" x 17"), together with two copies of calculations, and two copies of specifications in **English Units**, for approval prior to commencement of any construction. For each set of such plans and specifications submitted by City to BNSF, BNSF shall approve or reject such plans and specifications within thirty (30) days after BNSF's receipt thereof and, if rejected, the reasons for such rejection shall be set forth in reasonable detail. Corrected plans and specifications shall be approved or rejected in the manner hereinbefore provided. BNSF will give City final written approval of the plans and specifications substantially in the form of **Exhibit B**, attached hereto and incorporated herein by reference. Upon BNSF's final written approval of the plans and specifications (the "**Approved Plans**"), the Approved Plans will

become part of this C&M Agreement and incorporated herein. Any approval of the Approved Plans by BNSF shall in no way obligate BNSF in any manner with respect to the finished product design and/or construction. Any approval by BNSF shall mean only that the Approved Plans meet the subjective standards of BNSF, and such approval by BNSF shall not be deemed to mean that the Approved Plans or construction is structurally sound and appropriate or that the Approved Plans meet applicable regulations, laws, statutes or local ordinances and/or building codes.

3.1.2 City must provide for and maintain minimum vertical and horizontal clearances, as required in the Contractor Requirements in **Exhibit C**, attached hereto and incorporated herein by reference, and as approved by BNSF as part of the City Work Final Design or any other Approved Plans.

3.1.3 Prior to the start of any segment of City C&M Work on or affecting BNSF's property, City must provide to BNSF, and BNSF must approve, exact minimum vertical and horizontal clearances for such segment of City C&M Work being constructed pursuant to the City Work Final Design. Upon BNSF's approval of each segment of City C&M Work, BNSF and City agree to execute an amendment to this C&M Agreement incorporating the approved clearances into this C&M Agreement as **Exhibit D** ("**Final Clearances**"). City shall not deviate from the Final Clearances for the applicable segment of City C&M Work without the prior written approval of BNSF.

3.1.4 City or its contractor(s) must submit four (4) copies of any plans (including two sets of calculations in **English Units**) for proposed shoring, falsework or cribbing to be used over, under, or adjacent to BNSF's tracks to BNSF's Project Engineer (defined below) for approval. The shoring, falsework or cribbing used by City Contractors (defined below) shall comply with all applicable requirements *promulgated by state and federal agencies, departments, commissions and other legislative bodies.*

3.1.5 (a) For purposes of notices required under this C&M to be made to BNSF's Project Engineer, Division Engineer, Manager Signal, and Director Engineering Services, the following contact information is in effect at the Effective Date:

(i) BNSF's "**Project Engineer**" is:

Gerald Maczuga
Gerald.Maczuga@BNSF.com
402-458-7537 (office)
206-265-2427 (cell)
402-458-4376 (fax)

(ii) BNSF's "**Division Engineer**" is:

Andrew Shearer
Andrew.Shearer@BNSF.com
402-458-7724 (office)

(iii) BNSF's "**Manager Signal**" is:

Mike Koetter
Michael.Koetter@BNSF.com
402-458-7504 (office)
402-458-7590 (fax)

(iv) BNSF's "***Director Engineering Services***" is:

Tom Schmidt
Thomas.Schmidt@BNSF.com
913-551-4330 (office)

(b) The contact information in **Section 3.1.5(a)** may be changed from time to time in accordance with the notice provisions of **Section 4.6** below.

3.2 Additional City Requirements.

3.2.1 City must supervise and inspect the operations of all City Contractors to assure compliance with the City Work Final Design and all other Approved Plans, the terms of this C&M Agreement and all communicated and applicable safety requirements of BNSF.

3.2.2 City must make any required applications and obtain all required permits and approvals for the City C&M Work.

3.2.3 City must acquire all rights of way necessary for the City C&M Work.

3.2.4 City must furnish all labor, materials, tools and equipment for the performance of the City C&M Work.

3.2.5 City must advise BNSF's Project Engineer in writing of: (i) the completion date of each Right of Entry Work within thirty (30) days after each such completion date and (ii) the date on which City and/or City Contractor will meet with BNSF for the purpose of making final inspection of each Right of Entry Work.

3.2.6 City must notify and obtain prior authorization from BNSF's Project Engineer before entering BNSF's right-of-way for inspection, construction, maintenance, or any other purposes. Prior to performing any inspection, construction or maintenance with its own personnel, City shall: comply with all of BNSF's communicated and applicable safety rules and regulations; require any City employee performing maintenance to complete the safety training program at the Website "contractororientation.com"; notify BNSF when, pursuant to the requirements of **Exhibit C** or **Section 3.3.6** below, flaggers are required to be present; and procure, and have approved by BNSF's Risk Management Department, Railroad Protective Liability insurance.

3.2.7 City agrees to reimburse BNSF for work of an emergency nature caused by City or City Contractors in connection with the City C&M Work which BNSF deems is reasonably necessary for the immediate restoration of railroad operations, or for the protection of persons or BNSF property. Such emergency work may be performed by BNSF without prior approval of City and City agrees to fully reimburse BNSF for all such work.

3.2.8 The City C&M Work must be performed by City or City Contractors in a manner that will not endanger or interfere with the safe and timely operations of BNSF and its facilities.

3.2.9 City must include the following provisions in any contract with City Contractors:

3.2.9.1 City Contractor is placed on notice that fiber optic, communication and other cable lines and systems (collectively, the "**Lines**") owned by various telecommunications companies may be buried on BNSF's property or right-of-way. The locations of these Lines have been included on the plans based on information from the telecommunications companies. City Contractor will be responsible for contacting BNSF's Project Engineer, BNSF's Manager Signal, and the telecommunications companies and notifying them of any work that may damage these Lines or facilities and/or interfere with their service. City Contractor must also mark all Lines shown on the plans or marked in the field in order to verify their locations. City Contractor must also use all reasonable methods when working in the BNSF right-of-way or on BNSF property to determine if any other Lines (fiber optic, cable, communication or otherwise) may exist.

3.2.9.2 City Contractor will be responsible for the rearrangement of any facilities or Lines determined to interfere with the City C&M Work. City Contractor must cooperate fully with any telecommunications company(ies) in performing such rearrangements.

3.2.9.3 Failure to mark or identify these Lines will be sufficient cause for BNSF's Project Engineer to stop all or any part of the City C&M Work at no cost to City or BNSF until these items are completed.

3.2.9.4 All City C&M Work performed within the limits of BNSF's right-of-way must be performed in a good and workmanlike manner in accordance with plans and specifications approved by BNSF.

3.2.9.5 Changes or modifications during the City C&M Work that affect safety or BNSF operations must be subject to BNSF's approval.

3.2.9.6 No work will be commenced within BNSF's right-of-way until each of the prime contractors employed in connection with the City C&M Work have (i) executed and delivered to BNSF a letter agreement in the form of **Exhibit C-1(A)** attached hereto and incorporated herein by reference, and (ii) delivered to and secured BNSF's approval of the required insurance.

3.2.9.7 Notwithstanding the provisions of **Section 3.2.9.6** above, solely for the temporary Rights of Entry described in **Sections 2.1.1**, **2.1.3**, **2.1.4**, and **2.1.5** above, no work will be commenced within BNSF's right-of-way until each of the prime contractors employed in connection with the City C&M Work under the referenced temporary Rights of Entry have (i) executed and delivered to BNSF a letter agreement in the form of **Exhibit C-1(B)** attached hereto and incorporated herein by reference, and (ii) delivered to and secured BNSF's approval of the required insurance.

3.2.9.8 To facilitate scheduling for the City C&M Work, City Contractors shall give BNSF's Project Engineer eight (8) weeks' advance notice of the proposed times and dates for work windows, except in case of emergency, in which event City Contractors must notify BNSF's Project Engineer by telephone at (402) 458-7537 as soon as practicable and shall promptly thereafter follow up with written notice to BNSF's Project Engineer at City Contractor's earliest opportunity. Notwithstanding the foregoing, in no event shall City or any City Contractors enter onto BNSF's property prior to receiving written approval for such entry from BNSF's Project Engineer. BNSF and the City Contractors will establish mutually agreeable work windows for the City C&M Work. BNSF has the right at any time to revise or change the work windows, due to train operations or service obligations. BNSF will not be responsible for any additional costs and expenses resulting from a change in work windows. Additional costs and expenses resulting from a change in work windows shall be accounted for in the contractor's expenses for the City C&M Work.

3.3 Construction and Contractor Requirements.

3.3.1 Contractor Requirements. For the City C&M Work, City must comply, and cause all of its contractors (each a "**City Contractor**", and collectively the "**City Contractors**") to comply, with the obligations set forth in **Exhibit C** attached hereto and incorporated herein by reference, and cause all City Contractor(s) for such work to execute and deliver a Contractor Right of Entry ("**CROE**") in the form of **Exhibit C-1(A)** or **Exhibit C-1(B)**, as applicable. In addition, all City C&M Work must comply with all of the following requirements:

3.3.2 Standards. All City C&M Work must performed (i) in a good and workmanlike manner, (ii) in accordance with the applicable City Work Final Design or other Approved Plans, (iii) in conformance with applicable building codes and all applicable engineering, safety and any and all laws, statutes, regulations, ordinances, orders, covenants, restrictions, or decisions of any court of competent jurisdiction ("**Legal Requirements**"), (iv) in accordance with the accepted industry standards of care, skill and diligence, and (v) in such a manner as shall not adversely affect the structural integrity or maintenance of any BNSF improvements or other improvements on or near BNSF property, or any lateral support of any structures adjacent to or in the proximity of any BNSF improvements or BNSF property. In addition, each

portion of the City C&M Work must be promptly commenced by the Party obligated hereunder to perform the same and thereafter diligently prosecuted to conclusion in its logical order and sequence. Furthermore, any changes or modifications of the City C&M Work which affect BNSF will be subject to BNSF's written approval prior to the commencement of any such changes or modifications from BNSF's Project Engineer.

3.3.3 Site Cleanup and Restoration. City shall be responsible for all job site cleanup and restoration, including removal of all construction materials, concrete debris, surplus soil, refuse, *contaminated soils, asphalt debris, litter and other waste materials resulting from the City C&M Work to the* reasonable satisfaction of BNSF's Division Engineer.

3.3.4 Safety/Security.

3.3.4.1 During the City C&M Work, City, at City's sole cost, shall perform all activities and work in such a manner as to preclude personal injury or property damage to BNSF or any other party, and shall ensure that there is no interference with the railroad operations or other activities of BNSF, or anyone present on BNSF's property with the authority or permission of BNSF. City shall not disturb any improvements of BNSF or BNSF's existing lessees, licensees, license beneficiaries or lien holders, if any, or interfere with the use of such improvements, except as permitted by **Section 3.3.5** below.

3.3.4.2 Prior to entering BNSF's property to perform the City C&M Work, City shall *cause all City Contractor(s) to comply with all of BNSF's communicated and applicable safety and security* rules and regulations and complete the safety training program at the Website "www.contractororientation.com" or then-current program designated by BNSF (the "**Safety Orientation**") and eRAILSAFE or then-current security program designated by BNSF (the "**Security Orientation**") within one year prior to entering upon BNSF's property. Additionally, City must ensure that each and every employee of all City Contractors possess a card certifying completion of the Safety Orientation and the Security Orientation prior to entering upon BNSF's property. City must renew the Safety Orientation and Security Orientation annually.

3.3.4.3 City must supervise and inspect the activities of all City Contractors entering onto BNSF's property to perform the City C&M Work, and assure compliance with the applicable Approved Plans, the terms of this C&M Agreement, and all communicated and applicable safety requirements of BNSF. BNSF will have the right to stop work if any of the following events take place: (i) If BNSF determines that proper supervision and inspection are not being performed by City at any time during the City C&M Work, (ii) any City Contractor performs any work in a manner contrary to the applicable Approved Plans; (iii) any City Contractor, in BNSF's opinion, prosecutes its work in a manner which is hazardous to BNSF property, facilities, personnel, or the safe and expeditious movement of railroad traffic; or (iv) the insurance described herein or in **Exhibit C-1(A)** or **Exhibit C-1(B)**, as applicable, is canceled or expires. The work stoppage will continue until all necessary actions are taken by City to rectify the situation to the satisfaction of BNSF's Division Engineer or until additional insurance has been delivered to and accepted by BNSF. Any such work stoppage under this provision will not give rise to any liability on the part of BNSF. BNSF's right to stop the work is in addition to any other rights BNSF may have under this C&M Agreement or an applicable Right of Entry. In the event that BNSF desires to stop work, BNSF agrees to immediately notify City. Notwithstanding the foregoing, BNSF has no duty or obligation to observe or inspect, or to halt work by any City Contractor on BNSF's property, it being solely City's responsibility to ensure that work performed by any City Contractor is conducted in compliance with *the terms of this C&M Agreement, all Legal Requirements and the applicable Approved Plans.*

3.3.5 Disturbance of Improvements. City will be responsible at no cost to BNSF to locate and make any adjustments necessary to any wire lines, pipe lines, or other utilities, fences, buildings, improvements or other facilities located within BNSF's property (collectively, "**Other Improvements**"). City must contact the owner(s) of the Other Improvements notifying them of any work that may damage these Other Improvements and/or interfere with their service and, if required, obtain the owner's written approval prior to so affecting the Other Improvements. City must mark all BNSF improvements and Other Improvements on the applicable Approved Plans and mark all BNSF improvements and Other Improvements in the field in order to verify their locations. City must also use all reasonable methods when working on or near BNSF's property to determine if any BNSF improvements or

Other Improvements (fiber optic, cable, communication or otherwise) may exist. Failure to mark or identify any BNSF improvements or Other Improvements will be sufficient cause for BNSF to stop construction at no cost to BNSF until such items are completed. City must make all adjustments and other work described in this **Section 3.3.5**, including without limitation adjustments to Other Improvements and work on and affecting BNSF property, in a manner that does not adversely impact utility service to BNSF. City shall use commercially reasonable efforts to cause, at its expense, any utilities for its operations to be separately metered from utilities serving BNSF's operations by the date set forth on the Timeline (as defined in the Master Agreement).

3.3.6 Flagging. Subject to modification in writing by BNSF's Division Engineer, no City Contractor shall conduct any activities on, or be present on, any portion of BNSF's property that is within twenty-five (25) feet of any active railroad track or where any such activities have the potential to foul any active railroad track, except in the presence of a flagger. In addition to and not in limitation of the foregoing, City shall, and shall cause its City Contractors to, comply with all BNSF requirements concerning flagging, including without limitation the provisions of Section 1.05 of **Exhibit C**. BNSF shall arrange for the presence of flaggers as soon as practicable after receipt of notice from City in accordance with Section 1.05.01 of **Exhibit C**; provided, however, BNSF shall not be held responsible for City delays when flaggers are not available.

3.3.7 Flagging Costs. Flagging costs of the Included BNSF Work (as defined in the Master Agreement) are the responsibility of BNSF to the extent described in Section 2.2(i) of the Master Agreement. All other flagging costs, including without limitation flagging costs for City C&M Work, BNSF Additional Cost Work and any other work that is or becomes a part of the West Haymarket Project, shall be at City's cost and expense; provided, however, to the extent BNSF is performing work requiring flagging that is the responsibility of BNSF (under the first sentence of this **Section 3.3.7**) at the same time and in the same location as the City C&M Work, BNSF Additional Cost Work and/or any other work that is or becomes a part of the West Haymarket Project, such flagging costs and expenses shall be deemed to be part of the Included BNSF Work. Notwithstanding the foregoing, however, if the City C&M Work, BNSF Additional Cost Work or any other work that is or becomes part of the West Haymarket Project is of such magnitude that additional flaggers or additional flagging time is required, then City shall be responsible for all flagging costs and expenses for such incremental flaggers and additional flagging time as BNSF Additional City Cost Work. As further described in Section 1.05.03c of **Exhibit C**, the governmental flagging rate in effect at the time of performance by the flaggers will be used to calculate flagging costs. As more particularly described in Section 2.7.2 of the Master Agreement and also in the Escrow Agreement (as defined in the Master Agreement), City shall deposit additional amounts, including amounts for estimated flagging costs, into escrow for BNSF Additional City Cost Work.

3.3.8 No Unauthorized Tests or Digging. No City Contractor shall conduct any tests, investigations or any other activity using mechanized equipment and/or machinery, or place or store any mechanized equipment, tools or other materials, within twenty-five (25) feet of the centerline of any railroad track on BNSF's property, except after City has obtained written approval from BNSF Director Engineering Services, and then only in strict accordance with the terms and any conditions of such approval.

3.3.9 Drainage. Any and all cuts and fills, excavations or embankments as part of the City C&M Work shall be deemed to be a part of the City C&M Work and shall be made by City in such manner, form and to the extent as will provide adequate drainage of and from BNSF's property and any adjoining BNSF right of way. Wherever any such fill or embankment shall or may obstruct the natural and pre-existing drainage from either or both BNSF's property and BNSF's adjoining right of way, City shall construct such culverts or drains to preserve such natural and pre-existing drainage, and such culverts or drains shall also be deemed to be a part of the City C&M Work. City shall wherever necessary with respect to the City C&M Work, construct extensions of existing drains, culverts or ditches through or along BNSF's property (which extensions will also be deemed to be a part of the City C&M Work), such extensions to be of adequate sectional dimensions to preserve flowage of drainage or other waters, and/or material and workmanship equally as good as those now existing.

3.3.10 Liens. City shall promptly pay and discharge any and all liens arising out of any construction done, suffered or permitted to be done by City. BNSF is hereby authorized to post any notices

or take any other action upon or with respect to BNSF's property that is or may be permitted by Legal Requirements to prevent the attachment of any such liens to any portion of BNSF's property; provided, however, that failure of BNSF to take any such action shall not relieve City of any obligation or liability under this Section or any other section of this C&M Agreement. City shall include in its contracts with all City Contractors, and require all contractors performing any work on BNSF's property or providing materials to include in their contracts with their subcontractors, a notice and acknowledgement by the party providing work or materials that BNSF is not liable for any amounts due such contractor or contractors and waiving any right to place a lien on BNSF's property.

3.4 Environmental Compliance and Notification.

3.4.1 Compliance with Environmental Laws. City shall cause its contractors and employees to strictly comply with all federal, state and local environmental laws and regulations in its use of BNSF's property, including, but not limited to, the Resource Conservation and Recovery Act, as amended (RCRA), the Clean Water Act, the Oil Pollution Act, the Hazardous Materials Transportation Act, CERCLA (collectively, the "**Environmental Laws**") with respect to the BNSF property. City and its contractors, if any, shall not maintain a "treatment," "storage," "transfer" or "disposal" facility, or "underground storage tank," as those terms are defined by Environmental Laws, on BNSF's property. City and its contractors, if any, shall not handle, transport, release or suffer the release of "hazardous waste" or "hazardous substances", as "hazardous waste" and "hazardous substances" may now or in the future be defined by any Environmental Laws, except as may be pre-existing in BNSF's property and as encountered in the City C&M Work and then only in compliance with Environmental Laws and the SMP (defined below), and shall not use any soils or other materials containing hazardous waste or hazardous substances in connection with the City C&M Work, or otherwise bring any hazardous waste or hazardous substances onto any BNSF property.

3.4.2 Notice of Release. City shall give BNSF immediate notice to BNSF's Resource Operations Center at (800) 832-5452 in the event of any release of hazardous substances on or from BNSF's property, violation of Environmental Laws, or inspection or inquiry by governmental authorities charged with enforcing Environmental Laws with respect to City's use of BNSF's property. City shall use best efforts to promptly respond to any release arising from or related to its activities contemplated in this C&M Agreement only in compliance with Environmental Laws and the SMP. City shall also give BNSF notice of all measures undertaken on City's behalf to investigate, remediate, respond to or otherwise cure such release or violation.

3.4.3 Remediation of Release. In the event City has notice of a release or violation of Environmental Laws which occurred or may occur as a result of City's activities contemplated in this C&M Agreement, City shall take timely measures to investigate, remediate, respond to or otherwise cure as required by applicable law such release or violation affecting BNSF's property or improvements. If during the City C&M Work, soils or other materials considered to be environmentally contaminated are exposed, City will remove and safely dispose of said contaminated soils only in compliance with Environmental Laws and the SMP. Determination of soils contamination and applicable disposal procedures thereof will be made only by an agency having the capacity and authority to make such a determination.

3.4.4 Evidence of Compliance. City agrees to periodically to furnish BNSF upon written request with reasonable proof that it is in compliance with this **Article III, Section 3.4**.

3.4.5 Soil Management Plan. In addition to the other obligations of City and City Contractors as set forth herein, including but not limited to the provisions of **Exhibit C** and, as applicable, **Exhibit C-1(A)** or **Exhibit C-1(B)**, the Soil Management Plan attached hereto as **Exhibit E** ("**SMP**") sets forth additional obligations of City and BNSF with respect to the proper management of impacted environmental media during the Development Period (as defined in the Master Agreement).

3.5 Timing.

3.5.1 City will use commercially reasonable efforts to perform all City C&M Work in accordance with the Timeline.

3.5.2 BNSF and City mutually agree that no construction activities for the City C&M Work, nor future maintenance of any improvements which have a reasonable likelihood to delay train traffic on BNSF's main lines, will be permitted during the fourth quarter of each calendar year. Emergency work will be permitted only upon prior notification to BNSF's Network Operations Center (telephone number: 800 832-5452). BNSF and City mutually understand and agree that trains cannot be subjected to delay during this time period.

3.6 Indemnifications.

3.6.1 **TO THE FULLEST EXTENT PERMITTED BY LAW, CITY SHALL, AND SHALL CAUSE CITY'S CONTRACTORS TO, RELEASE, INDEMNIFY, DEFEND AND HOLD HARMLESS BNSF *AND BNSF'S AFFILIATED COMPANIES, PARTNERS, SUCCESSORS, ASSIGNS, LEGAL* REPRESENTATIVES, OFFICERS, DIRECTORS, SHAREHOLDERS, EMPLOYEES AND AGENTS FOR, FROM AND AGAINST ANY AND ALL CLAIMS, LIABILITIES, FINES, PENALTIES, COSTS, DAMAGES, LOSSES, LIENS, CAUSES OF ACTION, SUITS, DEMANDS, JUDGMENTS AND EXPENSES (INCLUDING, WITHOUT LIMITATION, COURT COSTS AND ATTORNEYS' FEES) OF ANY NATURE, KIND OR DESCRIPTION OF ANY PERSON (INCLUDING, WITHOUT LIMITATION, THE EMPLOYEES OF THE PARTIES HERETO) OR ENTITY DIRECTLY OR INDIRECTLY (COLLECTIVELY, "LIABILITIES") ARISING OUT OF, RESULTING FROM OR CAUSALLY RELATED TO (IN WHOLE OR IN PART):**

(i) **ANY RIGHTS OR INTERESTS GRANTED TO CITY OR ANY CITY PARTY (DEFINED BELOW) PURSUANT TO THIS C&M AGREEMENT, THE RIGHTS OF ENTRY, OR THE LICENSES AND/OR EASEMENTS GRANTED TO CITY PURSUANT TO THIS C&M AGREEMENT;**

(ii) **THE USE, OCCUPANCY OR PRESENCE OF CITY AND/OR CITY CONTRACTORS AND THEIR RESPECTIVE SUBCONTRACTORS, EMPLOYEES OR AGENTS (SUCH CITY CONTRACTORS, SUBCONTRACTORS, EMPLOYEES AND AGENTS BEING REFERRED TO INDIVIDUALLY AS A "CITY PARTY" AND COLLECTIVELY, THE "CITY PARTIES") AND/OR ANY *WORK PERFORMED BY CITY OR ANY CITY PARTY IN, ON, OR ABOUT BNSF'S PROPERTY OR* RIGHT-OF-WAY AND/OR THE WEST HAYMARKET PROJECT, INCLUDING, WITHOUT LIMITATION, OPERATION OF THE PEDESTRIAN BRIDGE, SECURITY FENCING (AS DEFINED IN THE MASTER AGREEMENT), OR STORM WATER MITIGATION (AS DEFINED IN THE MASTER AGREEMENT) BY CITY;**

(iii) **ANY ENVIRONMENTAL MATTERS ARISING FROM THE WEST HAYMARKET PROJECT AND/OR AFFECTING THE PROJECT AREA OR ANY PROPERTY ADJACENT THERETO;**

(iv) **ANY AND ALL CLAIMS BROUGHT BY ANY PARTY RELATED TO OR ARISING FROM THE ACQUISITION AND/OR DEVELOPMENT OF ANY AND ALL PROPERTY AS PART OF THE WEST HAYMARKET PROJECT, INCLUDING WITHOUT LIMITATION PROPERTY DESCRIBED IN THIS C&M AGREEMENT, THE MASTER AGREEMENT, THE EXCHANGE AGREEMENT, AND/OR THE RIGHTS OF ENTRY AGREEMENTS;**

(v) **THE CONDITION OF THE REPLACEMENT BNSF PROPERTY, INCLUDING WITHOUT LIMITATION ANY AND ALL CLAIMS RELATED TO OR ARISING FROM THE EXISTENCE OF ANY THIRD PARTY RESERVED RIGHTS AND/OR ANY THIRD PARTY'S EXERCISE OF ITS RESERVED RIGHTS;**

(vi) **ANY DAMAGE TO OR DESTRUCTION OF ANY TELECOMMUNICATION LINES IN CONNECTION WITH THE WEST HAYMARKET PROJECT BY CITY OR ANY CITY PARTY, INCLUDING BUT NOT LIMITED TO (A) ANY INJURY TO OR DEATH OF ANY PERSON EMPLOYED BY OR ON BEHALF OF ANY TELECOMMUNICATIONS COMPANY, AND/OR ITS CONTRACTORS, AGENTS AND/OR EMPLOYEES AS A RESULT OF SUCH DAMAGE OR DESTRUCTION, AND/OR (B) ANY CLAIM OR CAUSE OF ACTION FOR ALLEGED LOSS OF PROFITS**

OR REVENUE BY, OR LOSS OF SERVICE BY A CUSTOMER OR USER OF SUCH TELECOMMUNICATION COMPANY(IES) AS A RESULT OF SUCH DAMAGE OR DESTRUCTION;

(vii) **CITY'S OR ANY CITY PARTY'S BREACH OF THE TERMS AND CONDITIONS OF THIS C&M AGREEMENT, THE RIGHTS OF ENTRY, OR THE LICENSES AND/OR EASEMENTS GRANTED TO CITY PURSUANT TO THE MASTER AGREEMENT;**

(viii) **ANY ACT OR OMISSION OF CITY OR ITS OFFICERS, AGENTS, INVITEES, EMPLOYEES OR CONTRACTORS, OR A CITY PARTY, OR ANYONE DIRECTLY OR INDIRECTLY EMPLOYED BY ANY OF THEM, OR ANYONE THEY CONTROL OR EXERCISE CONTROL OVER.**

THE LIABILITY ASSUMED BY CITY AND THE CITY CONTRACTORS WILL NOT BE AFFECTED BY THE FACT, IF IT IS A FACT, THAT ANY DAMAGE, DESTRUCTION, INJURY OR DEATH WAS OCCASIONED BY OR CONTRIBUTED TO BY THE NEGLIGENCE OF BNSF, ITS AGENTS, SERVANTS, EMPLOYEES OR OTHERWISE, BUT EXCLUDING CLAIMS WHOLLY CAUSED BY BNSF'S SOLE NEGLIGENCE AND EXCLUDING CLAIMS TO THE EXTENT THAT SUCH CLAIMS ARE CAUSED BY THE WILLFUL MISCONDUCT OR GROSS NEGLIGENCE OF BNSF.

3.6.2 **FURTHER, TO THE FULLEST EXTENT PERMITTED BY LAW, CITY SHALL, AND SHALL CAUSE CITY'S CONTRACTORS TO, NOW AND FOREVER WAIVE ANY AND ALL CLAIMS, REGARDLESS OF WHETHER SUCH CLAIMS ARE BASED ON STRICT LIABILITY, NEGLIGENCE OR OTHERWISE, THAT BNSF IS AN "OWNER", "OPERATOR", "ARRANGER", OR "TRANSPORTER" WITH RESPECT TO THE EXCHANGE PROPERTIES (AS DEFINED IN THE EXCHANGE AGREEMENT), OR THE WEST HAYMARKET PROJECT AND/OR THE PROJECT AREA OR ANY PROPERTY ADJACENT THERETO, FOR THE PURPOSES OF CERCLA OR OTHER ENVIRONMENTAL LAWS. CITY WILL, AND WILL CAUSE CITY'S CONTRACTORS TO, INDEMNIFY, DEFEND AND HOLD BNSF HARMLESS FROM ANY AND ALL SUCH CLAIMS REGARDLESS OF THE NEGLIGENCE OF BNSF. CITY FURTHER AGREES THAT THE USE OF THE EXCHANGE PROPERTIES, OR THE WEST HAYMARKET PROJECT AND/OR THE PROJECT AREA OR ANY PROPERTY ADJACENT THERETO, AS CONTEMPLATED BY THIS C&M AGREEMENT SHALL NOT IN ANY WAY SUBJECT BNSF TO CLAIMS THAT BNSF IS OTHER THAN A COMMON CARRIER FOR PURPOSES OF ENVIRONMENTAL LAWS AND EXPRESSLY AGREES TO INDEMNIFY, DEFEND, AND HOLD BNSF HARMLESS FOR ANY AND ALL SUCH CLAIMS. IN NO EVENT SHALL BNSF BE RESPONSIBLE FOR THE ENVIRONMENTAL CONDITION OF THE EXCHANGE PROPERTIES, OR THE WEST HAYMARKET PROJECT AND/OR THE PROJECT AREA, OR ANY PROPERTY ADJACENT THERETO.**

3.6.3 **FURTHER, TO THE FULLEST EXTENT PERMITTED BY LAW, CITY AGREES, AND SHALL CAUSE CITY'S CONTRACTORS TO AGREE, REGARDLESS OF ANY NEGLIGENCE OR ALLEGED NEGLIGENCE OF BNSF, TO INDEMNIFY, DEFEND AND HOLD HARMLESS BNSF AGAINST AND ASSUME THE DEFENSE OF ANY LIABILITIES ASSERTED AGAINST OR SUFFERED BY BNSF UNDER OR RELATED TO THE FEDERAL EMPLOYERS' LIABILITY ACT ("FELA") WHENEVER EMPLOYEES OF CITY OR ANY OF ITS AGENTS, INVITEES, OR CONTRACTORS CLAIM OR ALLEGE THAT THEY ARE EMPLOYEES OF BNSF OR OTHERWISE. THIS INDEMNITY SHALL ALSO EXTEND, ON THE SAME BASIS, TO FELA CLAIMS BASED ON ACTUAL OR ALLEGED VIOLATIONS OF ANY FEDERAL, STATE OR LOCAL LAWS OR REGULATIONS, INCLUDING BUT NOT LIMITED TO THE SAFETY APPLIANCE ACT, THE LOCOMOTIVE INSPECTION ACT, THE OCCUPATIONAL SAFETY AND HEALTH ACT, THE RESOURCE CONSERVATION AND RECOVERY ACT, AND ANY SIMILAR STATE OR FEDERAL STATUTE.**

3.6.4 City agrees that its obligations under the provisions of this **Section 3.6** expressly includes claims related to property related to the West Haymarket Project that was formerly, but not currently, owned by BNSF and BNSF's predecessors-in-interest. City's indemnification obligations herein shall be in addition to, and not in limitation of, City's indemnification obligations pursuant to the terms and provisions of the Master Agreement, the Exchange Agreement and the Rights of Entry agreements.

3.7 Waiver of Municipal and Sovereign Immunity. To the fullest extent permitted by law, City waives its municipal immunity and its sovereign immunity with respect to BNSF for matters arising out of the West Haymarket Project, the Master Agreement, the Exchange Agreement, the Rights of Entry agreements, and this C&M Agreement, including, without limitation, (i) for environmental and other conditions of the Replacement BNSF Property that City is conveying to BNSF pursuant to the Master Agreement and the Exchange Agreement; (ii) for environmental and other conditions of the real property that BNSF is quitclaiming to City pursuant to the Master Agreement and the Exchange Agreement and of property related to the West Haymarket Project that was formerly, but not currently, owned by BNSF and BNSF's predecessors-in-interest, including remediation costs beyond Nebraska Department of Environmental Quality Title 200 funds ("**Title 200 Funding**"); (iii) for claims arising out of work performed by City or its contractors pursuant to the provisions of this C&M Agreement, the Master Agreement, the Exchange Agreement, the Rights of Entry agreements, and the Exchange Agreement; and (iv) for claims arising out of continuing rights of City to enter onto property of BNSF, including work performed by City and City Contractors on such property of BNSF. Any lawful waiver of City's sovereign immunity herein shall be in addition to, and not in limitation of, any lawful waiver of City's sovereign immunity pursuant to the terms and provisions of the Master Agreement, the Exchange Agreement, and the Rights of Entry agreements.

3.8 Insurance Obligations.

3.8.1 During the Development Period, City shall, at its sole cost and expense, procure and maintain the following insurance:

3.8.1.1 Commercial General Liability Insurance. This insurance shall contain broad form contractual liability in an amount of at least $25,000,000 per occurrence and an aggregate limit of $50,000,000, but in no event less than the amount otherwise carried by City. Coverage must be purchased on a post 1998 ISO occurrence form or equivalent and include coverage for, but not limited to, the following:

- Bodily Injury and Property Damage
- Personal Injury and Advertising Injury
- Fire legal liability
- Products and completed operations

This policy shall also contain the following endorsements, which shall be indicated on the certificate of insurance:

- The definition of insured contract shall be amended to remove any exclusion or other limitation for any work being done within 50 feet of railroad property.
- Waiver of subrogation in favor of and acceptable to Railroad.
- Additional insured endorsement in favor of and acceptable to Railroad
- Separation of insureds.
- The policy shall be primary and non-contributing with respect to any insurance carried by Railroad.

It is agreed that the workers' compensation and employers' liability related exclusions in the Commercial General Liability insurance policy(s) required herein are intended to apply to employees of the policy holder and shall not apply to Railroad employees.

3.8.1.2 Business Automobile Insurance. This insurance shall contain a combined single limit of at least $1,000,000 per occurrence, and include coverage for, but not limited to the following:

- Bodily injury and property damage
- Any and all vehicles owned, used or hired

This policy shall also contain the following endorsements or language, which shall be indicated on the certificate of insurance:

- Waiver of subrogation in favor of and acceptable to Railroad.
- Additional insured endorsement in favor or and acceptable to Railroad.
- Separation of insureds.
- The policy shall be primary and non-contributing with respect to any insurance carried by Railroad.

3.8.1.3 Workers' Compensation and Employers' Liability Insurance. This insurance shall include coverage for, but not limited to:

- City's statutory liability under the workers' compensation laws of the *state(s) in which the work is to be performed. If optional under State law,* the insurance must cover all employees anyway.
- Employers' Liability (Part B) with limits of at least $500,000 each accident, $500,000 by disease policy limit, $500,000 by disease each employee.

This policy shall also contain the following endorsements or language, which shall be indicated on the certificate of insurance:

- Waiver of subrogation in favor of and acceptable to Railroad.

3.8.1.4 Railroad Protective Liability Insurance. This insurance shall name only the Railroad as the Insured with coverage of at least $5,000,000.00 per occurrence and $10,000,000.00 in the aggregate. The policy shall be issued on a standard ISO form CG 00 35 10 93 and include the following:

- Endorsed to include the Pollution Exclusion Amendment (ISO form CG 28 31 10 93)
- Endorsed to include the Limited Seepage and Pollution Endorsement.
- *Endorsed to remove any exclusion for punitive damages.*
- No other endorsements restricting coverage may be added.
- The original policy must be provided to Railroad prior to performing any work or services under this C&M Agreement

In lieu of providing a Railroad Protective Liability Policy, City may participate in BNSF's Blanket Railroad Protective Liability Insurance Policy available to City and City Contractors.

3.8.1.5 Other Requirements:

All policies (applying to coverage listed above) must not contain an exclusion for punitive damages and certificates of insurance must reflect that no exclusion exists.

City agrees to waive its right of recovery against Railroad for all claims and suits against Railroad, except for claims and suits arising wholly out of the sole negligence, or to the extent caused by the gross negligence or willful misconduct, of Railroad. In addition, its insurers, through the terms of the policy or policy endorsement, waive their right of subrogation against Railroad for all claims and suits, except for claims and suits arising wholly out of the sole negligence, or to the extent caused by the gross negligence or willful misconduct, of Railroad. The certificate of insurance must reflect the waiver of subrogation endorsement. City further waives its right of recovery, and its insurers also waive their right of subrogation against Railroad for loss of its owned or leased property or property under City's care, custody or control, except for rights of recovery and rights of subrogation arising wholly out of the sole negligence, or to the extent caused by the gross negligence or willful misconduct, of Railroad.

City is allowed to self-insure up to $250,000 per occurrence and $250,000 aggregate on General Liability and Automotive Liability and up to $500,000 per occurrence and $500,000 aggregate on Worker's Compensation Liability without the prior written consent of Railroad. Any deductible, self-insured retention or other financial responsibility for claims must be covered directly by City in lieu of insurance. Any and all Railroad Liabilities that would otherwise, in accordance with the provisions

of this C&M Agreement, be covered by insurance will be covered as if City elected not to include a deductible, self-insured retention or other financial responsibility for claims.

Prior to commencing the City C&M Work, City must furnish to Railroad acceptable certificate(s) of insurance including an original signature of the authorized representative evidencing the required coverage, endorsements, and amendments. The policy(ies) must contain a provision that obligates the insurance company(ies) issuing such policy(ies) to notify Railroad in writing at least 30 days prior to any cancellation, non-renewal, substitution or material alteration. This cancellation provision must be indicated on the certificate of insurance. Upon request from Railroad, a certified duplicate original of any required policy must be furnished. Certificate(s) should be sent to the following address:

Ebix BPO
PO Box 12010-BN
Hemet, CA 92546-8010
Fax number: 951-652-2882
Email: bnsf@ebix.com

Upon notification to BNSF of cancellation, non-renewal, substitution or material alteration of any such policy(ies), BNSF shall have the option to (i) if feasible, pay, on behalf of the City, any and all such premiums, penalties, fees or expenses necessary to keep such policy(ies) in full force and effect; or (ii) in the event that such policy(ies) cannot be kept in full force and effect, enter into the open market and procure such policy(ies) of insurance on behalf of City as required by this C&M Agreement at the then-current market rate. Upon any of the above occurrences, BNSF shall invoice the City for reimbursement of all such premiums, penalties, fees or expenses advanced on City's behalf plus an additional fifteen (15%) of such advanced amounts as remuneration for BNSF's overhead. Such amounts advanced by BNSF shall be paid by City within thirty (30) days after delivery of a statement for such expense. Any insurance policy must be written by a reputable insurance company reasonably acceptable to Railroad or with a current Best's Guide Rating of A- and Class VII or better, and authorized to do business in the state(s) in which the service is to be provided.

City represents that this C&M Agreement has been thoroughly reviewed by its insurance agent(s)/broker(s), who have been instructed by City to procure the insurance coverage required by this C&M Agreement. Allocated Loss Expense must be in addition to all policy limits for coverages referenced above. City represents that it understands and its insurance agent(s)/broker(s) have been informed that the City's insurance coverage being procured by City herein is to protect, defend, indemnify and hold harmless BNSF from any and all Liabilities, as such term is defined herein, that may arise in connection with this C&M Agreement and City, to the fullest extent allowed by law, waives its sovereign and municipal immunity and any caps or limitations on legal liability that may result therefrom.

Not more frequently than once every five years, Railroad may reasonably modify the required insurance coverage to reflect then-current risk management practices in the railroad industry and underwriting practices in the insurance industry.

If any portion of the operation is to be subcontracted by City, City must require that City Contractors provide and maintain the insurance coverages set forth herein, naming Railroad as an additional insured; provided, however, that policy limits for Commercial General Liability Insurance may be reduced to $5,000,000 per occurrence and an aggregate limit of $10,000,000, but in no event less than the amount otherwise carried by the City Contractor. In addition, City must require that City Contractor release, defend and indemnify Railroad to the same extent and under the same terms and conditions as City is required to release, defend and indemnify Railroad herein.

Failure to provide evidence as required by this **Section 3.8** will entitle, but not require, Railroad to immediately suspend, until such default is cured, any and/or all work under this C&M Agreement, including without limitation: (i) BNSF Work, (ii) City C&M Work, and (iii) any other work on or affecting any BNSF property, subject to termination as provided in the Master Agreement. Acceptance of a certificate that does not comply with this section will not operate as a waiver of City's obligations hereunder.

The fact that insurance (including, without limitation, self-insurance) is obtained by City will not be deemed to release or diminish the liability of City including, without limitation, liability under the indemnity provisions of this C&M Agreement. Damages recoverable by Railroad will not be limited by the amount of the required insurance coverage.

For purposes of this **Section 3.8**, Railroad means "Burlington Northern Santa Fe, LLC", "BNSF Railway Company" and the subsidiaries, successors, assigns and affiliates of each.

3.8.2 During the Post-Development Period (as defined in the Master Agreement), City shall, and shall require City Contractors to, at City's sole cost and expense, procure and maintain the insurance coverages listed in the applicable Rights of Entry, continuing thereafter so long as the C&M Agreement and/or any Right of Entry agreement is in effect.

3.9 Adherence to Timeline. City must require City Contractors to reasonably adhere to the Timeline. The Parties mutually agree that BNSF's failure to complete the BNSF Work in accordance with *the Timeline due to inclement weather or unforeseen railroad emergencies will not constitute a breach of* this C&M Agreement by BNSF and will not subject BNSF to any liability. Regardless of the requirements of the Timeline, BNSF reserves the right to reallocate the labor forces assigned to complete the BNSF Work in the event of an emergency to provide for the immediate restoration of railroad operations (BNSF or its related railroads) or to protect persons or property on or near any BNSF owned property. BNSF will not be liable for any additional costs or expenses resulting from any such reallocation of its labor forces. The Parties mutually agree that any reallocation of labor forces by BNSF pursuant to this provision and any direct or indirect consequences or costs resulting from any such reallocation will not constitute a breach of this C&M Agreement by BNSF.

ARTICLE IV – MISCELLANEOUS

4.1 Any books, papers, receipts, and accounts of the Parties relating to the City C&M Work and the BNSF Additional City Cost Work will at all reasonable times and upon reasonable prior written notice be open to inspection and audit by the agents and authorized representatives of the Parties for a period of one (1) year after the date of the final disbursement from the Escrow Account.

4.2 The terms and conditions of indemnification and liability provisions of **Sections 3.6** and **3.7** shall survive expiration or termination of this C&M Agreement, the Master Agreement and the Exchange Agreement, and all Closings under the Exchange Agreement.

4.3 The covenants and provisions of this C&M Agreement are binding upon and inure to the benefit of the successors and assigns of the Parties. Notwithstanding the preceding sentence, neither Party may assign its rights and obligations hereunder without the prior written consent of the other Party. Any permitted assignment shall not terminate the liability of the assigning Party, unless a specific release of such liability in writing is given and signed by the other Party. Notwithstanding any contrary provision herein; City shall have the right to assign this C&M Agreement to the West Haymarket Joint Public Agency, a Nebraska joint public agency ("**JPA**") without further consent of BNSF provided (i) City delivers prior written notification to BNSF of the assignment, (ii) City and JPA enters into BNSF's then-standard Consent to Assignment form, pursuant to which City will remain jointly and severally liable for all of City's obligations hereunder, including without limitation City's liability and indemnification obligations; provided that BNSF agrees it will first send any claim or notice of default to JPA and will not pursue any action against City until thirty (30) days after the date of such claim or notice to JPA, unless failure to pursue action against City during such time would otherwise prejudice BNSF's rights, and (iii) City's entire interest under the Master Agreement, the Exchange Agreement, and all Rights of Entry agreements are assigned at the same time to JPA.

4.4 This C&M Agreement shall be in effect for so long as the Master Agreement and/or any Right of Entry is in effect; provided, however, that if the Master Agreement and all Rights of Entry have expired or been terminated, BNSF has the right to terminate this C&M Agreement upon written notice to City.

4.5 Neither termination nor expiration of this C&M Agreement will release either Party from any liability or obligation under this C&M Agreement, whether of indemnity or otherwise, resulting from any acts, omissions or events happening prior to the date of termination or expiration.

4.6 Any notice required or permitted to be given hereunder by one Party to the other shall be in writing and the same shall be given and shall be deemed to have been served and given if: (i) placed in the United States mail, certified, return receipt requested, or (ii) deposited into the custody of a nationally recognized overnight delivery service, addressed to the Party to be notified at the address for such Party specified below, or to such other address as the Party to be notified may designate by giving the other Party no less than thirty (30) days' advance written notice of such change in address.

If to BNSF: BNSF Railway Company
P.O. Box 961034
Fort Worth, TX 76161-0034.
Attn: Robert J. Boileau, P.E., Assistant Vice President, Engineering Services

If to City: City of Lincoln, Nebraska
555 South 10th Street
Lincoln, NE 68508
Attn: City Attorney

4.7 Time is of the essence of this C&M Agreement.

4.8 In any action (declaratory or otherwise) brought by either Party in connection with or arising out of the terms of this C&M Agreement, the prevailing Party in such action will be entitled to recover from the non-prevailing Party all actual costs, actual damages, and actual expenses, including, without limitation, reasonable attorneys' fees and charges to the fullest extent permitted by law.

4.9 Each Party and its counsel have reviewed and revised this C&M Agreement. The Parties agree that the rule of construction that any ambiguities are to be resolved against the drafting Party must not be employed to interpret this C&M Agreement or its amendments or exhibits.

4.10 If any clause or provision of this C&M Agreement is illegal, invalid or unenforceable under present or future laws effective during the term of this C&M Agreement, then and in that event, it is the intention of the Parties that the remainder of this C&M Agreement shall not be affected thereby, and it is also the intention of the Parties that in lieu of each clause or provision of this C&M Agreement that is illegal, invalid or unenforceable, there be added, as a part of this C&M Agreement, a clause or provision as similar in terms to such illegal, invalid or unenforceable clause or provision as may be possible and be legal, valid and enforceable.

4.11 This C&M Agreement, the Master Agreement, the Exchange Agreement, and, to the extent executed, the Right of Entry licenses and/or easements described herein, contain the entire agreement between BNSF and City with respect to the West Haymarket Project. Oral statements or prior written matters not specifically incorporated into this C&M Agreement are superseded hereby. No variation, modification, or change to this C&M Agreement, the Exchange Agreement or the Rights of Entry agreements shall bind either Party unless set forth in a document signed by both Parties. No failure or delay of either Party in exercising any right, power or privilege hereunder shall operate as a waiver of such Party's right to require strict compliance with any term of this C&M Agreement. The captions next to the section numbers of this C&M Agreement are for reference only and do not modify or affect this C&M Agreement.

4.12 No director, officer, elected or appointed official, or employee of either of the Parties shall be personally liable in the event of any default.

4.13 This C&M Agreement may be executed in more than one counterpart, including facsimile transmissions, each of which shall be deemed an original.

4.14 As of this same Effective Date, City and BNSF have also entered into the Master Agreement, the Exchange Agreement and to the extent executed, certain Right of Entry licenses and/or easements. After the Effective Date and upon completion of additional design work, City and BNSF expect to execute other Right of Entry licenses and/or easements. City and BNSF agree that, except as otherwise stated in **Article 1** of this C&M Agreement: (i) in the event the terms of the Master Agreement and the terms of the C&M Agreement, the Exchange Agreement and the various licenses and/or easements are inconsistent, then the Master Agreement shall prevail; (ii) in the event the terms of the Exchange Agreement and the terms of the C&M Agreement and the various licenses and/or easements are inconsistent, then the Exchange Agreement shall prevail, and (iii) in the event the terms of the C&M Agreement and the various licenses and/or easements are inconsistent, then the C&M Agreement shall prevail.

4.15 All aspects of this C&M Agreement shall be governed by the laws of the State of Nebraska.

4.16 To the fullest extent permitted by law any dispute arising under or in connection with this C&M Agreement or related to any subject matter which is the subject of this C&M Agreement shall be subject to the sole and exclusive jurisdiction of the United States District Court for the District of Nebraska. The aforementioned choice of venue is intended by the Parties to be mandatory and not permissive. Each Party hereby irrevocably consents to the jurisdiction of the United States District Court for the District of Nebraska in any such dispute and irrevocably waives, to the fullest extent permitted by law, any objection that it may now have or hereafter have to the laying of venue in such court and that any such dispute which is brought in such court has been brought in an inconvenient forum.

4.17 By signing below, the Parties affirm they have the legal authority to enter into this C&M Agreement.

4.18 Each Party will, whenever it shall be reasonably requested to do so by the other, promptly execute, acknowledge, and deliver, or cause to be executed, acknowledged, or delivered, any and all such reasonable further confirmations, instruments, or further assurances and consents as may be reasonably necessary or proper in order to effectuate the covenants and agreements herein provided. Each Party shall reasonably cooperate in good faith with the other and shall do any and all other acts and execute, acknowledge and deliver any and all documents so reasonably requested in order to satisfy the conditions set forth herein and carry out the intent and purposes of this C&M Agreement.

[*Signature page follows*]

Signature Page - C&M Agreement

IN WITNESS WHEREOF, the Parties have caused this C&M Agreement to be executed as of the date below each Party's signature; to be effective, however, as of the Effective Date above.

CITY OF LINCOLN, NEBRASKA, a Nebraska municipal corporation

By: _____
Chris Beutler, Mayor of Lincoln

Date: 10/19/2010

BNSF RAILWAY COMPANY, a Delaware corporation

By: _____
David L. Freeman, Vice President – Engineering

Date: _____

Signature Page - C&M Agreement

IN WITNESS WHEREOF, the Parties have caused this C&M Agreement to be executed as of the date below each Party's signature; to be effective, however, as of the Effective Date above.

CITY OF LINCOLN, NEBRASKA, a Nebraska municipal corporation

By: _____
Chris Beutler, Mayor of Lincoln

Date: _____

BNSF RAILWAY COMPANY, a Delaware corporation

By: _____
David L. Freeman, Vice President – Engineering

Date: _____

EXHIBIT A

Project Area

[See attached]

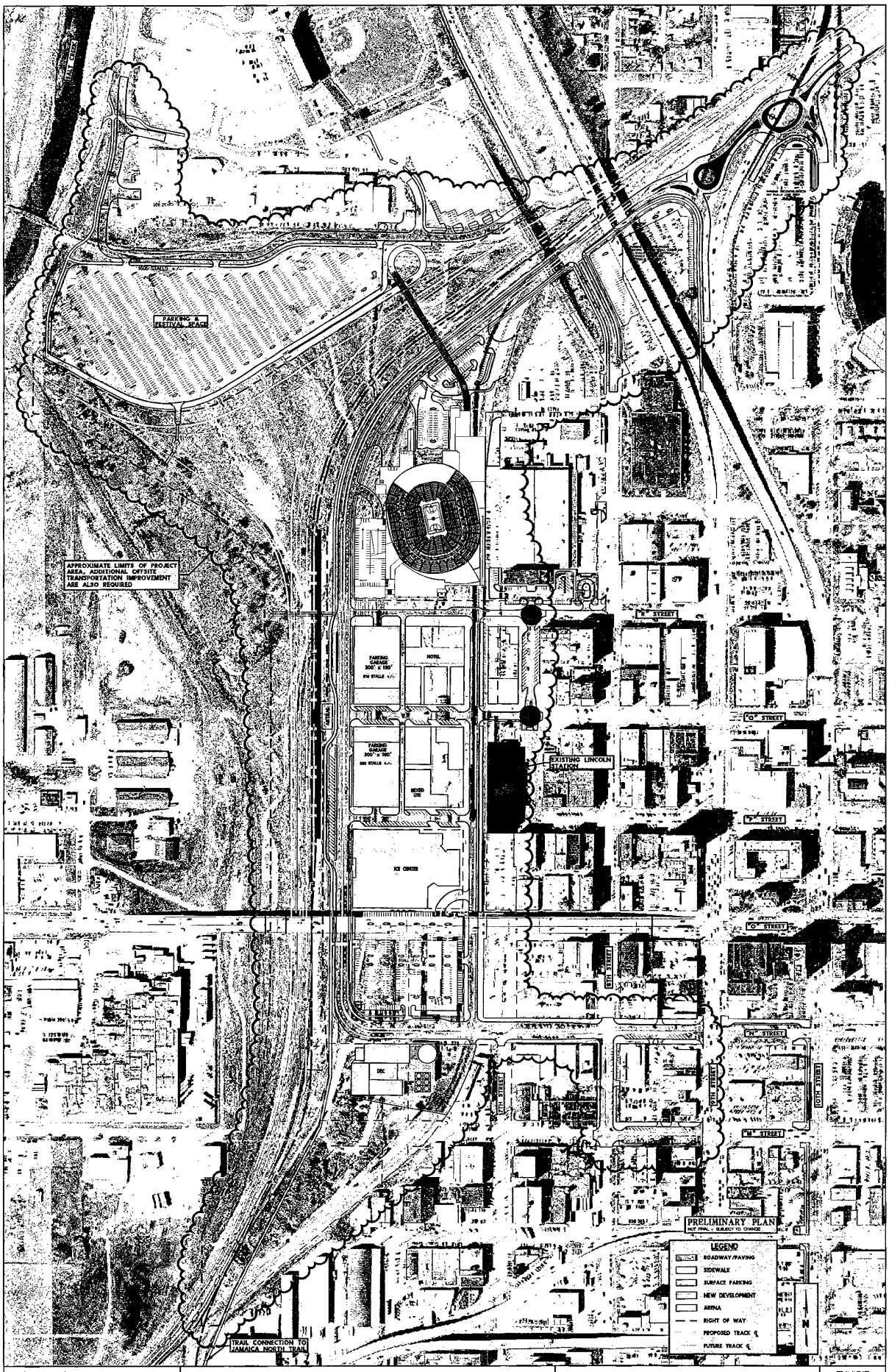

PROJECT NO: 008-0645 DRAWN BY: JGO DATE: 8/23/2010	WEST HAYMARKET REDEVELOPMENT AREA	OLSSON ASSOCIATES 1111 Lincoln Mall, Suite 111 P.O. Box 84608 Lincoln, NE 68501-4608 TEL 402.474.6311 FAX 402.474.5160	EXHIBIT A

DATE: 8/23/2010
DGN: f:\projects\008-0645_mw\base\sch\bls\railroad_agreement\exhibits\BNSF Exhibits\DISPLAYS\BNSF_Exhibit A Display.dgn

Exhibit C

EXHIBIT B

Form of BNSF Plan Approval

Gerald Maczuga
Project Engineer

BNSF Railway Company
201 N 7th St
Lincoln, NE 68508
402-458-7537 (office)
402-458-4376 (fax)
Gerald.Maczuga@BNSF.com

Date: _____

Ernest R. Peo, III
City of Lincoln, Nebraska
555 South 10th Street
Lincoln, NE 68508
Attn: Chief Assistant City Attorney

Re: Review of Plans and Specifications dated September 2, 2010, drafted by Olsson Associates (hereinafter called the "**Plans and Specifications**")

Dear Mr. Peo:

This letter serves as BNSF Railway Company's ("**BNSF**") response to its review of the Plans and Specifications covering the construction of the West Haymarket Utility Relocation - Project Number 870501. BNSF has reviewed these plans and no exceptions are taken. BNSF has not reviewed the design details or calculations for structural integrity or engineering accuracy. BNSF accepts no responsibility for errors or omissions in the design of the project. These comments are given to the City of Lincoln, Nebraska ("**City**") pursuant to Section 3.1.1 of that certain Construction and Maintenance Agreement between BNSF and City, dated _____, 2010. If the Plans and Specifications are revised by City subsequent to the date set forth above, this letter shall no longer serve as BNSF's written comments and City must resubmit said Plans and Specifications to BNSF for review.

Regards,

Gerald Maczuga
Project Engineer

EXHIBIT C

Contractor Requirements

1.01 General

- **1.01.01** The Contractor must cooperate with **BNSF RAILWAY COMPANY**, hereinafter referred to as "Railway" during the performance of the C&M Work (as defined in Exhibit C-1) and any other work over, under, on or adjacent to Railway Property.

- **1.01.02** The Contractor must execute and deliver to the Railway duplicate copies of the Exhibit C-1 Contractor Right of Entry for C&M Work, in the form attached hereto, obligating the Contractor to provide and maintain in full force and effect the insurance called for under Section 3 of said Exhibit C-1. Questions regarding procurement of the Railroad Protective Liability Insurance should be directed to Rosa Martinez at Marsh, USA, 214-303-8519.

- **1.01.03** The Contractor must plan, schedule and conduct all C&M Work activities so as not to interfere with the movement of any trains on Railway Property.

- **1.01.04** The Contractor's right to enter Railway Property is subject to the absolute right of Railway to cause the Contractor's work on Railway Property to cease if, in the opinion of Railway, Contractor's activities create a hazard to Railway Property, employees, and/or operations. Railway will have the right to stop construction work on the C&M Work if any of the following events take place: (i) Contractor (or any of its subcontractors) performs the C&M Work in a manner contrary to the plans and specifications approved by Railway; (ii) Contractor (or any of its subcontractors), in Railway's opinion, prosecutes the C&M Work in a manner which is hazardous to Railway Property, facilities or the safe and expeditious movement of railroad traffic; or (iii) the insurance described in the attached Exhibit C-1 is canceled during the course of the C&M Work. The work stoppage will continue until all necessary actions are taken by Contractor or its subcontractor to rectify the situation to the satisfaction of Railway's Division Engineer or until additional insurance has been delivered to and accepted by Railway. Any such work stoppage under this provision will not give rise to any liability on the part of Railway. Railway's right to stop the C&M Work is in addition to any other rights Railway may have including, but not limited to, actions or suits for damages or lost profits. In the event that Railway desires to stop the C&M Work, Railway agrees to immediately notify the following individual in writing:

  Roger Figard, City Engineer
  Department of Public Works and Utilities
  City of Lincoln, Nebraska
  555 South 10th Street
  Lincoln, NE 68508

- **1.01.05** Contractor shall, and shall cause all Contractor parties to, strictly comply with all federal, state and local environmental laws and regulations in its use of Railway's Property, including, but not limited to, the Resource Conservation and Recovery Act, as amended (RCRA), the Clean Water Act, the Oil Pollution Act, the Hazardous Materials Transportation Act, CERCLA (collectively, the "**Environmental Laws**") with respect to Railway's Property. Contractor shall not maintain a "treatment," "storage," "transfer" or "disposal" facility, or "underground storage tank," as those terms are defined by Environmental Laws, on Railway's Property. Contractor shall not handle, transport, release or suffer the release of "hazardous

waste" or "hazardous substances", as "hazardous waste" and "hazardous substances" may now or in the future be defined by any Environmental Laws, except as may be pre-existing in Railway Property and as encountered in the C&M Work and then only in compliance with Environmental Laws, and shall not use any soils or other materials containing hazardous waste or hazardous substances in connection with the C&M Work, or otherwise bring any hazardous waste or hazardous substances onto any Railway Property.

Contractor shall give Railway immediate notice to Railway's Resource Operations Center at (800) 832-5452 in the event of any release of hazardous substances on or from Railway Property, violation of Environmental Laws, or inspection or inquiry by governmental authorities charged with enforcing Environmental Laws with respect to Contractor's use of Railway Property. Contractor shall use best efforts to promptly respond to any release arising from or related to its activities contemplated in the C&M Work. Contractor shall also give Railway notice of all measures undertaken on Contractor's behalf to investigate, remediate, respond to or otherwise cure such release or violation.

In the event Contractor has notice of a release or violation of Environmental Laws which occurred or may occur as a result of Contractor's activities contemplated in the C&M Work, Contractor shall take timely measures to investigate, remediate, respond to or otherwise cure as required by applicable law such release or violation affecting Railway Property or improvements. If during the C&M Work, soils or other materials considered to be environmentally contaminated are exposed, Contractor will remove and safely dispose of said contaminated soils. Determination of soils contamination and applicable disposal procedures thereof will be made only by an agency having the capacity and authority to make such a determination.

Contractor agrees to periodically to furnish Railway upon written request with reasonable proof that it is in compliance with this **Section 1.01.05**.

- **1.01.06** All C&M Work must performed (i) in a good and workmanlike manner, (ii) in accordance with plans and specifications approved in advance by Railway (the "**Approved Plans**"), (iii) in conformance with applicable building codes and all applicable engineering, safety and any and all laws, statutes, regulations, ordinances, orders, covenants, restrictions, or decisions of any court of competent jurisdiction ("**Legal Requirements**"), (iv) in accordance with the accepted industry standards of care, skill and diligence, and (v) in such a manner as shall not adversely affect the structural integrity or maintenance of any Railway improvements or other improvements on or near Railway Property, or any lateral support of any structures adjacent to or in the proximity of any Railway improvements or Railway Property. In addition, the C&M Work must be promptly commenced by the Contractor and thereafter diligently prosecuted to conclusion in its logical order and sequence. Furthermore, any changes or modifications of the C&M Work which affect Railway will be subject to Railway's written approval prior to the commencement of any such changes or modifications from the Railway's Project Engineer.

- **1.01.07** Contractor shall be responsible for all job site cleanup and restoration, including removal of all construction materials, concrete debris, surplus soil, refuse, contaminated soils, asphalt debris, litter and other waste materials resulting from the C&M Work to the reasonable satisfaction of Railway's Division Engineer.

- **1.01.08** The Contractor must notify the City at City's City Engineer, telephone number (402) 441-7567 and Railway's Project Engineer, telephone number (402) 458-7537 at least ten (10) calendar days before commencing any C&M Work on Railway Property.

- **1.01.09** For any bridge demolition and/or falsework above any tracks or any excavations located with any part of the excavations located within, whichever is greater, twenty-five (25) feet of the nearest track or intersecting a slope from the plane of the top of rail on a 2 horizontal to 1 vertical slope beginning at eleven (11) feet from centerline of the nearest track, both measured perpendicular to center line of track, the Contractor must furnish the Railway five sets of working drawings showing details of construction affecting Railway Property and tracks. The working drawing must include the proposed method of installation and removal of falsework, shoring or cribbing, not included in the contract plans and two sets of structural calculations of any falsework, shoring or cribbing. For all excavation and shoring submittal plans, the current "BNSF-UPRR Guidelines for Temporary Shoring" must be used for determining the design loading conditions to be used in shoring design, and all calculations and submittals must be in accordance with the current "BNSF-UPRR Guidelines for Temporary Shoring". All submittal drawings and calculations must be stamped by a registered professional engineer licensed to practice in the state the project is located. All calculations must take into consideration railway surcharge loading and must be designed to meet American Railway Engineering and Maintenance-of-Way Association (previously known as American Railway Engineering Association) Coopers E-80 live loading standard. All drawings and calculations must be stamped by a registered professional engineer licensed to practice in the state the project is located. The Contractor must not begin C&M Work until notified by the Railway that plans have been approved, which approved plans shall become part of the Approved Plans. The Contractor will be required to use lifting devices such as, cranes and/or winches to place or to remove any falsework over Railway's tracks. In no case will the Contractor be relieved of responsibility for results obtained by the implementation of the Approved Plans.

- **1.01.10** Subject to the movement of Railway's trains, Railway will cooperate with the *Contractor such that the C&M Work may be handled and performed in an efficient manner.* The Contractor will have no claim whatsoever for any type of damages or for extra or additional compensation in the event his work is delayed by the Railway.

1.02 Contractor Safety Orientation

- **1.02.01 No employee of the Contractor, its subcontractors, agents or invitees may enter Railway Property without first having completed Railway's Engineering Contractor Safety Orientation, found on the web site www.contractororientation.com. The Contractor must ensure that each of its employees, subcontractors, agents or invitees completes Railway's Engineering Contractor Safety Orientation through internet sessions before any C&M Work is performed. Additionally, the Contractor must ensure that each and every one of its employees, subcontractors, agents or invitees possesses a card certifying completion of the Railway's Engineering Contractor Safety Orientation before entering Railway Property. The Contractor is responsible for the cost of the Railway's Engineering Contractor Safety Orientation. The Contractor must renew the Railway's Engineering Contractor Safety Orientation annually. Further clarification can be found on the web site or from the Railway's Project Engineer.**

1.03 Railway Requirements

- **1.03.01** The Contractor must take protective measures as are necessary to keep railway facilities, including track ballast, free of sand, debris, and other foreign objects and materials resulting from his operations. Any damage to railway facilities resulting from Contractor's

operations will be repaired or replaced by Railway and the cost of such repairs or replacement must be paid for by the Contractor.

- **1.03.02** The Contractor must notify Railway's Project Engineer, telephone number (402) 458-7537, and provide blasting plans to the Railway for review seven (7) calendar days prior to conducting any blasting operations adjacent to or on Railway Property.

- **1.03.03** The Contractor must abide by the following temporary clearances during construction:

  - 15' Horizontally from centerline of nearest track
  - 21'-6" Vertically above top of rail
  - 27'-0" Vertically above top of rail for electric wires carrying less than 750 volts
  - 28'-0" Vertically above top of rail for electric wires carrying 750 volts to 15,000 volts
  - 30'-0" Vertically above top of rail for electric wires carrying 15,000 volts to 20,000 volts
  - 34'-0" Vertically above top of rail for electric wires carrying more than 20,000 volts

- **1.03.04** Upon completion of construction, the following clearances shall be maintained:

  - 25' Horizontally from centerline of nearest existing or future track to the face of the pier or abutment structure
  - 31' Vertically above top of rail to the bottom of the Pedestrian Bridge

- **1.03.05** Any infringement within State statutory clearances due to the Contractor's operations must be submitted to the Railway and to the City and must not be undertaken until approved in writing by the Railway, and until the City has obtained any necessary authorization from the State Regulatory Authority for the infringement. No extra compensation will be allowed in the event the Contractor's C&M Work is delayed pending Railway approval, and/or the State Regulatory Authority's approval.

- **1.03.06** In the case of impaired vertical clearance above top of rail, Railway will have the option of installing tell-tales or other protective devices Railway deems necessary for protection of Railway operations. The cost of tell-tales or protective devices will be borne by the Contractor.

- **1.03.07** The details of construction affecting the Railway Property and tracks not included in the City Work Final Design or Approved Plans for the C&M Work must be submitted to the Railway by the City for approval before work is undertaken and this work must not be undertaken until approved by the Railway.

- **1.03.08** At other than public road crossings, the Contractor must not move any equipment or materials across Railway's tracks until permission has been obtained from the Railway. The Contractor must obtain a "Temporary Construction Crossing Agreement" from the Railway prior to moving his equipment or materials across Railway's tracks. The temporary crossing must be gated and locked at all times when not required for use by the Contractor. The temporary crossing for use of the Contractor will be constructed and, at the completion of the project, removed at the expense of the Contractor.

- **1.03.09** Discharge, release or spill on the Railway Property of any hazardous substances, oil, petroleum, constituents, pollutants, contaminants, or any hazardous waste is prohibited

and Contractor must immediately notify the Railway's Resource Operations Center at 1(800) 832-5452, of any discharge, release or spills in excess of a reportable quantity. Contractor must not allow Railway Property to become a treatment, storage or transfer facility as those terms are defined in the Resource Conservation and Recovery Act or any state analogue.

- **1.03.10** The Contractor, upon completion of the C&M Work, must promptly remove from the Railway Property all of Contractor's tools, equipment, implements and other materials, whether brought upon said Railway Property by Contractor or any subcontractor, employee or agent of Contractor or of any subcontractor, and must cause Railway Property to be left in a condition acceptable to Railway's Project Engineer.

1.04 Contractor Roadway Worker on Track Safety Program and Safety Action Plan

- **1.04.01** Each Contractor that will perform C&M Work within 25 feet of the centerline of a track must develop and implement a Roadway Worker Protection/On Track Safety Program and work with Railway's Project Engineer to develop an on track safety strategy as described in the guidelines listed in the on track safety portion of the Safety Orientation. This Program must provide Roadway Worker protection/on track training for all employees of the Contractor, its subcontractors, agents or invitees. This training is reinforced at the job site through job safety briefings. Additionally, each Contractor must develop and implement the Safety Action Plan, as provided for on the web site **www.contractororientation.com**, which will be made available to Railway prior to commencement of any work on Railway Property. During the performance of C&M Work, the Contractor must audit its C&M Work activities. The Contractor must designate an on-site Project Supervisor who will serve as the contact person for the Railway and who will maintain a copy of the Safety Action Plan, safety audits, and Material Safety Datasheets (MSDS), at the job site.

  Contractors shall ensure its employees, subcontractors and agents are United States citizens or legally working in this country under a work VISA.

1.05 Railway Flagger Services:

- **1.05.01** The Contractor must give Railway's Project Engineer, telephone number (402) 458-7537, a minimum of thirty (30) calendar days advance notice when flagging services will be required so that the Roadmaster can make appropriate arrangements (i.e., bulletin the flagger's position). If flagging services are scheduled in advance by the Contractor and it is subsequently determined by the parties hereto that such services are no longer necessary, the Contractor must give the Roadmaster five (5) working days advance notice so that appropriate arrangements can be made to abolish the position pursuant to union requirements.

- **1.05.02** Unless determined otherwise by Railway's Project Engineer, Railway flagger will be required and furnished when Contractor's C&M Work activities are located over, under and/or within twenty-five (25) feet measured horizontally from centerline of the nearest track and when cranes or similar equipment positioned beyond 25-feet from the track centerline could foul the track in the event of tip over or other catastrophic occurrence, but not limited thereto for the following conditions:

- **1.05.02a** When, upon inspection by Railway's Project Engineer, other conditions warrant.

- **1.05.02b** When any excavation is performed below the bottom of tie elevation, if, in the opinion of Railway's Project Engineer, track or other Railway facilities may be subject to movement or settlement.

- **1.05.02c** When C&M Work in any way interferes with the safe operation of trains at timetable speeds.

- **1.05.02d** When any hazard is presented to Railway track, communications, signal, electrical, or other facilities either due to persons, material, equipment or blasting in the vicinity.

- **1.05.02e** Special permission must be obtained from the Railway before moving heavy or cumbersome objects or equipment which might result in making the track impassable.

- **1.05.03** Flagging services will be performed by qualified Railway flaggers.

- **1.05.03a** Flagging crew generally consists of one employee. However, additional personnel may be required to protect Railway Property and operations, if deemed necessary by Railway's Project Engineer.

- **1.05.03b** Each time a flagger is called, the minimum period for billing will be the eight (8) hour basic day.

- **1.05.03c** The cost of flagger services provided by the Railway will be borne by City. The estimated cost for one (1) flagger is approximately between $800.00-$1,600.00 for an eight (8) hour basic day with time and one-half or double time for overtime, rest days and holidays. The estimated cost for each flagger includes vacation allowance, paid holidays, Railway and unemployment insurance, public liability and property damage insurance, health and welfare benefits, vehicle, transportation, meals, lodging, radio, equipment, supervision and other costs incidental to performing flagging services. Negotiations for Railway labor or collective bargaining agreements and rate changes authorized by appropriate Federal authorities may increase actual or estimated flagging rates. **THE GOVERNMENTAL FLAGGING RATE IN EFFECT AT THE TIME OF PERFORMANCE BY THE CONTRACTOR HEREUNDER WILL BE USED TO CALCULATE THE ACTUAL COSTS OF FLAGGING PURSUANT TO THIS PARAGRAPH.**

- **1.05.03d** The average train traffic on this route is 65 freight trains per 24-hour period at a timetable speed of 40 MPH and 2 passenger trains at a timetable speed of 15 MPH.

1.06 Contractor General Safety Requirements

- **1.06.01 C&M Work in the proximity of railway track(s) is potentially hazardous where movement of trains and equipment can occur at any time and in any direction. All work performed by contractors within 25 feet of any track must be in compliance with FRA Roadway Worker Protection Regulations. No Contractor shall conduct any tests, investigations or any other activity using mechanized equipment and/or machinery, or place or store any mechanized equipment, tools or other materials, within twenty-five (25) feet of the centerline of any railroad track on Railway Property, except after Contractor has obtained written approval from Railway Director Engineering Services, and then only in strict accordance with the terms and any conditions of such approval.**

- **1.06.02 Before beginning any task on Railway Property, a thorough job safety briefing must be conducted with all personnel involved with the task and repeated when the**

personnel or task changes. If the task is within 25 feet of any track, the job briefing must include the Railway's flagger, as applicable, and include the procedures the Contractor will use to protect its employees, subcontractors, agents or invitees from moving any equipment adjacent to or across any Railway track(s).

- **1.06.03 Workers must not work within 25 feet of the centerline of any track without an on track safety strategy approved by Railway's Project Engineer. When authority is provided, every contractor employee must know: (1) who the Railway flagger is, and how to contact the flagger, (2) limits of the authority, (3) the method of communication to stop and resume work, and (4) location of the designated places of safety. Persons or equipment entering flag/work limits that were not previously job briefed, must notify the flagger immediately, and be given a job briefing when working within 25 feet of the center line of track.**

- **1.06.04 When Contractor employees are required to work on Railway Property after normal working hours or on weekends, Railway's Project Engineer must be notified. A minimum of two employees must be present at all times.**

- **1.06.05** Any employees, agents or invitees of Contractor or its subcontractors under suspicion of being under the influence of drugs or alcohol, or in the possession of same, will be removed from the Railway Property and subsequently released to the custody of a representative of Contractor management. Future access to the Railway Property by that employee will be denied.

- **1.06.06** Any damage to Railway Property, or any hazard noticed on passing trains must be reported immediately to the Railway's Project Engineer. Any vehicle or machine which may come in contact with track, signal equipment, or structure (bridge) and could result in a train derailment must be reported immediately to the Railway's Project Engineer and to the Railway's Resource Operations Center at 1 (800) 832-5452. Local emergency numbers are to be obtained from Railway's Project Engineer prior to the start of any C&M Work and must be posted at the job site.

- **1.06.07** For safety reasons, all persons are prohibited from having pocket knives, firearms or other deadly weapons in their possession while working on Railway Property.

- **1.06.08** All personnel protective equipment (PPE) used on Railway Property must meet applicable OSHA and ANSI specifications. Current Railway personnel protective equipment requirements are listed on the web site, **www.contractororientation.com,** however, a partial list of the requirements include: a) safety glasses with permanently affixed side shields (no yellow lenses); b) hard hats c) safety shoe with: hardened toes, above-the-ankle lace-up and a defined heel; and d) high visibility retro-reflective work wear. The Railway's Project Engineer is to be contacted regarding local specifications for meeting requirements relating to hi-visibility work wear. Hearing protection, fall protection, gloves, and respirators must be worn as required by State and Federal regulations. **(NOTE – Should there be a discrepancy between the information contained on the web site and the information in this paragraph, the web site will govern.)**

- **1.06.09 THE CONTRACTOR MUST NOT PILE OR STORE ANY MATERIALS, MACHINERY OR EQUIPMENT CLOSER THAN 25'-0" TO THE CENTER LINE OF THE NEAREST RAILWAY TRACK. MATERIALS, MACHINERY OR EQUIPMENT MUST NOT BE STORED OR LEFT WITHIN 250 FEET OF ANY HIGHWAY/RAIL AT-GRADE CROSSINGS OR TEMPORARY CONSTRUCTION CROSSING, WHERE STORAGE OF**

THE SAME WILL OBSTRUCT THE VIEW OF A TRAIN APPROACHING THE CROSSING. PRIOR TO BEGINNING WORK, THE CONTRACTOR MUST ESTABLISH A STORAGE AREA WITH CONCURRENCE OF THE RAILWAY'S PROJECT ENGINEER.

- **1.06.10** Machines or vehicles must not be left unattended with the engine running. Parked machines or equipment must be in gear with brakes set and if equipped with blade, pan or bucket, they must be lowered to the ground. All machinery and equipment left unattended on Railway Property must be left inoperable and secured against movement. (See internet Engineering Contractor Safety Orientation program for more detailed specifications)

- **1.06.11** Workers must not create and leave any conditions at the work site that would interfere with water drainage. Any C&M Work performed over water must meet all Federal, State and Local regulations.

- **1.06.12** All power line wires must be considered dangerous and of high voltage unless informed to the contrary by proper authority. For all power lines the minimum clearance between the lines and any part of the equipment or load must be; 200 KV or below - 15 feet; 200 to 350 KV - 20 feet; 350 to 500 KV - 25 feet; 500 to 750 KV - 35 feet; and 750 to 1000 KV - 45 feet. If capacity of the line is not known, a minimum clearance of 45 feet must be maintained. A person must be designated to observe clearance of the equipment and give a timely warning for all operations where it is difficult for an operator to maintain the desired clearance by visual means.

1.07 Excavation

- **1.07.01** Before excavating, the Contractor must determine whether any underground pipe lines, electric wires, or cables, including fiber optic cable systems are present and located within the C&M Work area. The Contractor must determine whether excavation on Railway Property could cause damage to buried cables resulting in delay to Railway traffic and disruption of service to users. Delays and disruptions to service may cause business interruptions involving loss of revenue and profits. Before commencing excavation, the Contractor must contact Railway's Project Engineer, telephone number (402) 458-7537. All underground and overhead wires will be considered HIGH VOLTAGE and dangerous until verified with the company having ownership of the line. **It is the Contractor's responsibility to notify any other companies that have underground utilities in the area and arrange for the location of all underground utilities before excavating.**

- **1.07.02** The Contractor must cease all work and notify Railway immediately before continuing excavation in the area if obstructions are encountered which do not appear on drawings. If the obstruction is a utility and the owner of the utility can be identified, then the Contractor must also notify the owner immediately. If there is any doubt about the location of underground cables or lines of any kind, no work must be performed until the exact location has been determined. There will be no exceptions to these instructions.

- **1.07.03** All excavations must be conducted in compliance with applicable OSHA regulations and, regardless of depth, must be shored where there is any danger to tracks, structures or personnel.

- **1.07.04** Any excavations, holes or trenches on Railway Property must be covered, guarded and/or protected when not being worked on. When leaving work site areas at night and over weekends, the areas must be secured and left in a condition that will ensure that Railway

employees and other personnel who may be working or passing through the area are protected from all hazards. All excavations must be back filled as soon as possible.

- **1.07.05** Contractor will be responsible at no cost to Railway to locate and make any adjustments necessary to any wire lines, pipe lines, or other utilities, fences, buildings, improvements or other facilities located within Railway Property (collectively, "**Other Improvements**"). Contractor must contact the owner(s) of the Other Improvements notifying them of any work that may damage these Other Improvements and/or interfere with their service and, if required, obtain the owner's written approval prior to so affecting the Other Improvements. Contractor must mark all Railway improvements and Other Improvements on the applicable Approved Plans or other plans and specifications approved in advance by Railway, and mark all Railway improvements and Other Improvements in the field in order to verify their locations. Contractor must also use all reasonable methods when working on or near Railway Property to determine if any Railway improvements or Other Improvements (fiber optic, cable, communication or otherwise) may exist. Failure to mark or identify any Railway improvements or Other Improvements will be sufficient cause for Railway to stop construction at no cost to Railway until such items are completed. Contractor must make all adjustments and other work described in this Section 1.07.05, including without limitation adjustments to Other Improvements and work on and affecting Railway Property, in a manner that does not adversely impact utility service to Railway.

1.08 Hazardous Waste, Substances and Material Reporting

- **1.08.01** If Contractor discovers any hazardous waste, hazardous substance, petroleum or other deleterious material, including but not limited to any non-containerized commodity or material, on or adjacent to Railway Property, in or near any surface water, swamp, wetlands or waterways, while performing any work under this Agreement, Contractor must immediately: (a) notify the Railway's Resource Operations Center at 1 (800) 832-5452, of such discovery: (b) take safeguards necessary to protect its employees, subcontractors, agents and/or third parties: and (c) exercise due care with respect to the release, including the taking of any appropriate measure to minimize the impact of such release.

1.09 Personal Injury Reporting

- **1.09.01** The Railway is required to report certain injuries as a part of compliance with Federal Railroad Administration (FRA) reporting requirements. Any personal injury sustained by an employee of the Contractor, subcontractor or Contractor's invitees while on the Railway Property must be reported immediately (by phone mail if unable to contact in person) to the Railway's Project Engineer. The Non-Employee Personal Injury Data Collection Form contained herein is to be completed and sent by Fax to the Railway at 1 (817) 352-7595 and to the Railway's Project Engineer no later than the close of shift on the date of the injury.

NON-EMPLOYEE PERSONAL INJURY DATA COLLECTION

INFORMATION REQUIRED TO BE COLLECTED PURSUANT TO FEDERAL REGULATION. IT SHOULD BE USED FOR COMPLIANCE WITH FEDERAL REGULATIONS ONLY AND IS NOT INTENDED TO PRESUME ACCEPTANCE OF RESPONSIBILITY OR LIABILITY.

1. Accident City/St
2. Date: _____ Time: _____ County:
3. Temperature:
4. Weather
   (if non-Railway location)

5. Social Security #

6. Name (last, first, mi)

7. Address: Street: _____ City: St._____ Zip:

8. Date of Birth: _____ and/or Age _____ Gender:
   (if available)

9. (a) Injury: _____ (b) Body Part:
   (i.e. (a) Laceration (b) Hand)

11. Description of Accident (To include location, action, result, etc.):

12. Treatment:
    __ First Aid Only
    __ Required Medical Treatment
    __ Other Medical Treatment

13. Dr. Name _____ 30. Date: _____

14. Dr. Address:
    Street: _____ City: _____ St: _____ Zip: _____

15. Hospital Name:

16. Hospital Address:
    Street: _____ City: _____ St: _____ Zip: _____

17. Diagnosis:

FAX TO RAILWAY AT (817) 352-7595
AND COPY TO RAILWAY ROADMASTER FAX

EXHIBIT C-1(A)

CONTRACTOR'S RIGHT OF ENTRY
For C&M Work

BNSF RAILWAY COMPANY
Attention: Project Engineer

Gentlemen:

The undersigned (hereinafter, the "**Contractor**"), has entered into a contract (the "**Contract**") dated _____, 20_ with the City of Lincoln, Nebraska ("**City**") for the performance of certain work ("**C&M Work**") in connection with the construction of entertainment, recreation, lodging, offices, retail and/or other complementary and/or supporting facilities in Lincoln, Nebraska (collectively, the "**West Haymarket Project**"). The work to be performed under this Agreement is deemed to be "City C&M Work" (as defined in that certain Construction and Maintenance Agreement ["**C&M Agreement**"] dated _____, 2010, between BNSF Railway Company and the City). Performance of such C&M Work will necessarily require Contractor to enter BNSF RAILWAY COMPANY ("**Railway**") right of way and property ("**Railway Property**"). The Contract provides that no C&M Work will be commenced within Railway Property until the Contractor employed in connection with said C&M Work for the **City of Lincoln, Nebraska** (i) executes and delivers to Railway an Agreement in the form hereof, and (ii) provides insurance of the coverage and limits specified in such Agreement and Section 3 herein. If this Agreement is executed by a party who is not the Owner, General Partner, President or Vice President of Contractor, Contractor must furnish evidence to Railway certifying that the signatory is empowered to execute this Agreement on behalf of Contractor.

Accordingly, in consideration of Railway granting permission to Contractor to enter upon Railway Property and as an inducement for such entry, Contractor, effective on the date of the Contract, has agreed and does hereby agree with Railway as follows:

Section 1. RELEASE OF LIABILITY AND INDEMNITY

TO THE FULLEST EXTENT PERMITTED BY LAW, CONTRACTOR SHALL RELEASE, INDEMNIFY, DEFEND AND HOLD HARMLESS RAILWAY AND RAILWAY'S AFFILIATED COMPANIES, PARTNERS, SUCCESSORS, ASSIGNS, LEGAL REPRESENTATIVES, OFFICERS, DIRECTORS, SHAREHOLDERS, EMPLOYEES AND AGENTS FOR, FROM AND AGAINST ANY AND ALL CLAIMS, LIABILITIES, FINES, PENALTIES, COSTS, DAMAGES, LOSSES, LIENS, CAUSES OF ACTION, SUITS, DEMANDS, JUDGMENTS AND EXPENSES (INCLUDING, WITHOUT LIMITATION, COURT COSTS AND ATTORNEYS' FEES) OF ANY NATURE, KIND OR DESCRIPTION OF ANY PERSON (INCLUDING, WITHOUT LIMITATION, THE EMPLOYEES OF THE PARTIES HERETO) OR ENTITY DIRECTLY OR INDIRECTLY (COLLECTIVELY, "LIABILITIES") ARISING OUT OF, RESULTING FROM OR CAUSALLY RELATED TO (IN WHOLE OR IN PART):

(i) ANY RIGHTS OR INTERESTS GRANTED TO CONTRACTOR PURSUANT TO THIS AGREEMENT;

(ii) THE USE, OCCUPANCY OR PRESENCE OF CONTRACTOR AND CONTRACTOR PARTIES (DEFINED BELOW) AND/OR ANY WORK PERFORMED BY CONTRACTOR AND CONTRACTOR PARTIES IN, ON, OR ABOUT RAILWAY'S PROPERTY OR RIGHT-OF-WAY AND/OR THE WEST HAYMARKET PROJECT, INCLUDING, WITHOUT LIMITATION, OPERATION OF THE PEDESTRIAN BRIDGE, SECURITY FENCING, OR STORM WATER MITIGATION BY ANY CONTRACTOR PARTY (DEFINED BELOW);

(iii) ANY ENVIRONMENTAL MATTERS ARISING FROM CONTRACTOR AND/OR CONTRACTOR PARTIES' USE AND OCCUPANCY OF RAILWAY'S RIGHT-OF-WAY OR OTHER RAILWAY PROPERTY, INCLUDING WITHOUT LIMITATION USE AND OCCUPANCY OF RAILWAY'S RIGHT-OF-WAY OR OTHER RAILWAY PROPERTY IN CONNECTION WITH PERFORMANCE OF THE C&M WORK;

(iv) ANY DAMAGE TO OR DESTRUCTION OF ANY TELECOMMUNICATION LINES IN CONNECTION WITH THE WEST HAYMARKET PROJECT BY CONTRACTOR AND/OR CONTRACTOR PARTIES, INCLUDING BUT NOT LIMITED TO (A) ANY INJURY TO OR DEATH OF ANY PERSON EMPLOYED BY OR ON BEHALF OF ANY TELECOMMUNICATIONS COMPANY, AND/OR ITS CONTRACTORS, AGENTS AND/OR EMPLOYEES AS A RESULT OF SUCH DAMAGE OR DESTRUCTION, AND/OR (B) ANY CLAIM OR CAUSE OF ACTION FOR ALLEGED LOSS OF PROFITS OR REVENUE BY, OR LOSS OF SERVICE BY A CUSTOMER OR USER OF SUCH TELECOMMUNICATION COMPANY(IES) AS A RESULT OF SUCH DAMAGE OR DESTRUCTION;

(v) CONTRACTOR'S BREACH OF THE TERMS AND CONDITIONS OF THIS AGREEMENT; OR

(vi) ANY ACT OR OMISSION OF CONTRACTOR OR ITS OFFICERS, AGENTS, INVITEES, EMPLOYEES OR SUBCONTRACTORS (SUCH OFFICERS, AGENTS, INVITEES, EMPLOYEES AND SUBCONTRACTORS BEING REFERRED TO HEREIN INDIVIDUALLY AS A "CONTRACTOR PARTY" AND COLLECTIVELY, "CONTRACTOR PARTIES"), OR ANYONE DIRECTLY OR INDIRECTLY EMPLOYED BY ANY OF THEM, OR ANYONE THEY CONTROL OR EXERCISE CONTROL OVER.

THE LIABILITY ASSUMED BY CONTRACTOR WILL NOT BE AFFECTED BY THE FACT, IF IT IS A FACT, THAT ANY DAMAGE, DESTRUCTION, INJURY OR DEATH WAS OCCASIONED BY OR CONTRIBUTED TO BY THE NEGLIGENCE OF RAILWAY, ITS AGENTS, SERVANTS, EMPLOYEES OR OTHERWISE, BUT EXCLUDING CLAIMS WHOLLY CAUSED BY RAILWAY'S SOLE NEGLIGENCE AND EXCLUDING CLAIMS TO THE EXTENT THAT SUCH CLAIMS ARE CAUSED BY THE WILLFUL MISCONDUCT OR GROSS NEGLIGENCE OF RAILWAY.

FURTHER, TO THE FULLEST EXTENT PERMITTED BY LAW, CONTRACTOR AGREES, REGARDLESS OF ANY NEGLIGENCE OR ALLEGED NEGLIGENCE OF RAILWAY, TO INDEMNIFY, DEFEND AND HOLD HARMLESS RAILWAY AGAINST AND ASSUME THE DEFENSE OF ANY LIABILITIES ASSERTED AGAINST OR SUFFERED BY RAILWAY UNDER OR RELATED TO THE FEDERAL EMPLOYERS' LIABILITY ACT ("FELA") WHENEVER EMPLOYEES OF CONTRACTOR OR ANY CONTRACTOR PARTY CLAIM OR ALLEGE THAT THEY ARE EMPLOYEES OF RAILWAY OR OTHERWISE. THIS INDEMNITY SHALL ALSO EXTEND, ON THE SAME BASIS, TO FELA CLAIMS BASED ON ACTUAL OR ALLEGED VIOLATIONS OF ANY FEDERAL, STATE OR LOCAL LAWS OR REGULATIONS, INCLUDING BUT NOT LIMITED TO THE SAFETY APPLIANCE ACT, THE LOCOMOTIVE INSPECTION ACT, THE OCCUPATIONAL SAFETY AND HEALTH ACT, THE RESOURCE

CONSERVATION AND RECOVERY ACT, AND ANY SIMILAR STATE OR FEDERAL STATUTE.

Contractor further agrees, at its expense, in the name and on behalf of Railway, that it will adjust and settle all Liabilities against Railway, and will, at Railway's discretion, appear and defend any suits or actions of law or in equity brought against Railway on any claim or cause of action arising out of any liability assumed by Contractor under this Agreement for which Railway is liable or is alleged to be liable. Railway will give notice to Contractor, in writing, of the receipt or dependency of such claims and thereupon Contractor must proceed to adjust and handle to a conclusion such claims, and in the event of a suit being brought against Railway, Railway may forward summons and complaint or other process in connection therewith to Contractor, and Contractor, at Railway's discretion, must defend, adjust, or settle such suits and protect, indemnify, and save harmless Railway from and against all Liabilities arising out of any such claims or suits, provided that the foregoing indemnification obligations do not include Liabilities arising wholly out of the sole negligence of Railway or to the extent caused by the gross negligence or willful misconduct of Railway.

In addition to any other provision of this Agreement, in the event that all or any portion of this Article shall be deemed to be inapplicable for any reason, including without limitation as a result of a decision of an applicable court, legislative enactment or regulatory order, the parties agree that this Article shall be interpreted as requiring Contractor to indemnify Railway to the fullest extent permitted by applicable law. **THROUGH THIS AGREEMENT THE PARTIES EXPRESSLY INTEND FOR CONTRACTOR TO INDEMNIFY RAILWAY FOR RAILWAY'S ACTS OF NEGLIGENCE, BUT EXCLUDING CLAIMS WHOLLY CAUSED BY RAILWAY'S SOLE NEGLIGENCE AND EXCLUDING CLAIMS TO THE EXTENT THAT SUCH CLAIMS ARE CAUSED BY THE WILLFUL MISCONDUCT OR GROSS NEGLIGENCE OF RAILWAY.**

It is mutually understood and agreed that the assumption of liabilities and indemnification provided for in this Agreement survive any termination of this Agreement.

Section 2. TERM

This Agreement is effective from the date of the Contract until (i) the completion of the project set forth herein, and (ii) full and complete payment to Railway of any and all sums or other amounts owing and due hereunder.

Section 3. INSURANCE

Contractor must, at its sole cost and expense, procure and maintain during the life of this Agreement the following insurance coverage:

A. Commercial General Liability Insurance. This insurance shall contain broad form contractual liability with a combined single limit of a minimum of $5,000,000.00 per occurrence, and $10,000,000.00 in the aggregate, but in no event less than the amount otherwise carried by the Contractor. Coverage must be purchased on a post 1998 ISO occurrence form or equivalent and include coverage for, but not limited to, the following:
    - Bodily Injury and Property Damage
    - Personal Injury and Advertising Injury
    - Fire legal liability
    - Products and completed operations

This policy shall also contain the following endorsements, which shall be indicated on the certificate of insurance:

- The definition of insured contract shall be amended to remove any exclusion or other limitation for any work being done within 50 feet of railroad property.
- Waiver of subrogation in favor of and acceptable to Railroad.
- Additional insured endorsement in favor of and acceptable to Railroad.
- Separation of insureds.
- The policy shall be primary and non-contributing with respect to any insurance carried by Railroad.

It is agreed that the workers' compensation and employers' liability related exclusions in the Commercial General Liability insurance policy(s) required herein are intended to apply to employees of the policy holder and shall not apply to Railroad employees.

No other endorsements limiting coverage as respects obligations under this Agreement may be included on the policy with regard to the work being performed under this Agreement.

B. Business Automobile Insurance. This insurance shall contain a combined single limit of at least $1,000,000 per occurrence, and include coverage for, but not limited to the following:

- Bodily injury and property damage
- Any and all vehicles owned, used or hired

This policy shall also contain the following endorsements or language, which shall be indicated on the certificate of insurance:

- Waiver of subrogation in favor of and acceptable to Railroad.
- Additional insured endorsement in favor or and acceptable to Railroad.
- Separation of insureds.
- The policy shall be primary and non-contributing with respect to any insurance carried by Railroad.

C. Workers Compensation and Employers Liability Insurance. This insurance shall include coverage for, but not limited to:

- Contractor's statutory liability under the worker's compensation laws of the state(s) in which the work is to be performed. If optional under State law, the insurance must cover all employees anyway.
- Employers' Liability (Part B) with limits of at least $500,000 each accident, $500,000 by disease policy limit, $500,000 by disease each employee.

This policy shall also contain the following endorsements or language, which shall be indicated on the certificate of insurance:

- Waiver of subrogation in favor of and acceptable to Railroad.

D. Railroad Protective Liability Insurance. This insurance shall name only the Railroad as the Insured with coverage of at least $5,000,000 per occurrence and $10,000,000 in the aggregate. The policy shall be issued on a standard ISO form CG 00 35 10 93 and include the following:

- Endorsed to include the Pollution Exclusion Amendment (ISO form CG 28 31 10 93)
- Endorsed to include the Limited Seepage and Pollution Endorsement.

- Endorsed to remove any exclusion for punitive damages.
- No other endorsements restricting coverage may be added.
- The original policy must be provided to Railroad prior to performing any work or services under this Agreement

In lieu of providing a Railroad Protective Liability Policy, Contractor may participate in BNSF's Blanket Railroad Protective Liability Insurance Policy available to Contractor.

Other Requirements:

All policies (applying to coverage listed above) must not contain an exclusion for punitive damages and certificates of insurance must reflect that no exclusion exists.

Contractor agrees to waive its right of recovery against Railroad for all claims and suits against Railroad, except for claims and suits arising wholly out of the sole negligence, or to the extent caused by the gross negligence or willful misconduct, of Railroad. In addition, its insurers, through the terms of the policy or policy endorsement, waive their right of subrogation against Railroad for all claims and suits, except for claims and suits arising wholly out of the sole negligence, or to the extent caused by the gross negligence of willful misconduct, of Railroad. The certificate of insurance must reflect the waiver of subrogation endorsement. Contractor further waives its right of recovery, and its insurers also waive their right of subrogation against Railroad for loss of its owned or leased property or property under Contractor's care, custody or control, except for the right of recovery or right of subrogation arising wholly out of the sole negligence, or to the extent caused by the gross negligence or willful misconduct, of Railroad.

Contractor is not allowed to self-insure without the prior written consent of Railroad. If granted by Railroad, any deductible, self-insured retention or other financial responsibility for claims must be covered directly by Contractor in lieu of insurance. Any and all Railroad liabilities that would otherwise, in accordance with the provisions of this Agreement, be covered by Contractor's insurance will be covered as if Contractor elected not to include a deductible, self-insured retention or other financial responsibility for claims.

Prior to commencing the C&M Work, Contractor must furnish to Railroad acceptable certificate(s) of insurance including an original signature of the authorized representative evidencing the required coverage, endorsements, and amendments. The policy(ies) must contain a provision that obligates the insurance company(ies) issuing such policy(ies) to notify Railroad in writing at least 30 days prior to any cancellation, non-renewal, substitution or material alteration. This cancellation provision must be indicated on the certificate of insurance. Upon request from Railroad, a certified duplicate original of any required policy must be furnished. Certificate(s) should be sent to the following address:

Ebix BPO
PO Box 12010-BN
Hemet, CA 92546-8010
Fax number: 951-652-2882
Email: bnsf@ebix.com

Any insurance policy must be written by a reputable insurance company reasonably acceptable to Railroad or with a current Best's Guide Rating of A- and Class VII or better, and authorized to do business in the state(s) in which the service is to be provided.

Contractor represents that this Agreement has been thoroughly reviewed by Contractor's insurance agent(s)/broker(s), who have been instructed by Contractor to procure the insurance coverage required by this Agreement. Allocated Loss Expense must be in addition to all policy limits for coverages referenced above.

Not more frequently than once every five years, Railroad may reasonably modify the required insurance coverage to reflect then-current risk management practices in the railroad industry and underwriting practices in the insurance industry.

If any portion of the operation is to be subcontracted by Contractor, Contractor must require that its subcontractors provide and maintain the insurance coverages set forth herein, naming Railroad as an additional insured, and requiring that the subcontractors release, defend and indemnify Railroad to the same extent and under the same terms and conditions as Contractor is required to release, defend and indemnify Railroad herein.

Failure to provide evidence as required by this section will entitle, but not require, Railroad to immediately suspend work under this Agreement until such evidence is provided. Acceptance of a certificate that does not comply with this section will not operate as a waiver of Contractor's obligations hereunder.

The fact that insurance (including, without limitation, self-insurance) is obtained by Contractor will not be deemed to release or diminish the liability of Contractor including, without limitation, liability under the indemnity provisions of this Agreement. Damages recoverable by Railroad will not be limited by the amount of the required insurance coverage.

For purposes of this section, Railroad means "Burlington Northern Santa Fe, LLC", "BNSF Railway Company" and the subsidiaries, successors, assigns and affiliates of each.

Section 4. EXHIBIT C CONTRACTOR REQUIREMENTS

The Contractor must observe and comply with all provisions, obligations, requirements and limitations contained in the Contract, and the Contractor Requirements set forth on Exhibit C attached to this Agreement and the Contract, including, but not be limited to, payment of all costs incurred for any damages to Railway roadbed, tracks, and/or appurtenances thereto, resulting from use, occupancy, or presence of its employees, representatives, or agents or subcontractors on or about the construction site.

Section 5. TRAIN DELAY

Contractor is responsible for and hereby indemnifies and holds harmless Railway (including its affiliated railway companies, and its tenants) for, from and against all damages arising from any unscheduled delay to a freight or passenger train which affects Railway's ability to fully utilize its equipment and to meet customer service and contract obligations. Contractor will be billed, as further provided below, for the economic losses arising from loss of use of equipment, contractual loss of incentive pay and bonuses and contractual penalties resulting from train delays, whether caused by Contractor, or subcontractors, or by the Railway performing work under this Agreement. Railway agrees that it will not perform any act to unnecessarily cause train delay.

For loss of use of equipment, Contractor will be billed the current freight train hour rate per train as determined from Railway's records. Any disruption to train traffic may cause delays to multiple trains at the same time for the same period.

Additionally, the parties acknowledge that passenger, U.S. mail trains and certain other grain, intermodal, coal and freight trains operate under incentive/penalty contracts between Railway and its customer(s). Under these arrangements, if Railway does not meet its contract service commitments, Railway may suffer loss of performance or incentive pay and/or be subject to penalty payments. Contractor is responsible for any train performance and incentive penalties or other contractual economic losses actually incurred by Railway which are attributable to a train delay caused by Contractor or its subcontractors.

The contractual relationship between Railway and its customers is proprietary and confidential. In the event of a train delay covered by this Agreement, Railway will share information relevant to any train delay to the extent consistent with Railway confidentiality obligations. Damages for train delay are currently $382.20 per hour per incident. **THE RATE THEN IN EFFECT AT THE TIME OF PERFORMANCE BY THE CONTRACTOR HEREUNDER WILL BE USED TO CALCULATE THE ACTUAL COSTS OF TRAIN DELAY PURSUANT TO THIS AGREEMENT.**

Contractor and its subcontractors must give Railway's Project Engineer (402) 458-7537 thirty (30) days' minimum advance notice of the times and dates for proposed work windows. Railway and Contractor will establish mutually agreeable work windows for the project. Railway has the right at any time to revise or change the work windows due to train operations or service obligations. Railway will not be responsible for any additional costs or expenses resulting from a change in work windows. Additional costs or expenses resulting from a change in work windows shall be accounted for in Contractor's expenses for the project.

Contractor and subcontractors must plan, schedule, coordinate and conduct all Contractor's work so as to not cause any delays to any trains.

[Signature page follows]

Kindly acknowledge receipt of this letter by signing and returning to the Railway two original copies of this letter, which, upon execution by Railway, will constitute an Agreement between us.

_____	
(Contractor)	**BNSF Railway Company**
By:_____	By:_____
Printed Name: _____	Name:_____
Title:_____	*Project Engineer*
Contact Person: _____	Accepted and effective this _____day of 20__.
Address: _____	
_____	
City:_____ State:___ Zip:____	
Fax: _____	
Phone: _____	
E-mail:_____	

EXHIBIT C-1(B)

CONTRACTOR'S RIGHT OF ENTRY
For C&M Work

BNSF RAILWAY COMPANY
Attention: Project Engineer

Gentlemen:

The undersigned (hereinafter, the "**Contractor**"), has entered into a contract (the "**Contract**") dated _____, 20_ with the City of Lincoln, Nebraska ("**City**") for the performance of certain work ("**C&M Work**") in connection with the construction of entertainment, recreation, lodging, offices, retail and/or other complementary and/or supporting facilities in Lincoln, Nebraska (collectively, the "**West Haymarket Project**"). The work to be performed under this Agreement is deemed to be "City C&M Work" (as defined in that certain Construction and Maintenance Agreement ["**C&M Agreement**"] dated _____, 2010, between BNSF Railway Company and the City). Performance of such C&M Work will necessarily require Contractor to enter BNSF RAILWAY COMPANY ("**Railway**") right of way and property ("**Railway Property**"). The Contract provides that no C&M Work will be commenced within Railway Property until the Contractor employed in connection with said C&M Work for the **City of Lincoln, Nebraska** (i) executes and delivers to Railway an Agreement in the form hereof, and (ii) provides insurance of the coverage and limits specified in such Agreement and Section 3 herein. If this Agreement is executed by a party who is not the Owner, General Partner, President or Vice President of Contractor, Contractor must furnish evidence to Railway certifying that the signatory is empowered to execute this Agreement on behalf of Contractor.

Accordingly, in consideration of Railway granting permission to Contractor to enter upon Railway Property and as an inducement for such entry, Contractor, effective on the date of the Contract, has agreed and does hereby agree with Railway as follows:

Section 1. RELEASE OF LIABILITY AND INDEMNITY

TO THE FULLEST EXTENT PERMITTED BY LAW, CONTRACTOR SHALL RELEASE, INDEMNIFY, DEFEND AND HOLD HARMLESS RAILWAY AND RAILWAY'S AFFILIATED COMPANIES, PARTNERS, SUCCESSORS, ASSIGNS, LEGAL REPRESENTATIVES, OFFICERS, DIRECTORS, SHAREHOLDERS, EMPLOYEES AND AGENTS FOR, FROM AND AGAINST ANY AND ALL CLAIMS, LIABILITIES, FINES, PENALTIES, COSTS, DAMAGES, LOSSES, LIENS, CAUSES OF ACTION, SUITS, DEMANDS, JUDGMENTS AND EXPENSES (INCLUDING, WITHOUT LIMITATION, COURT COSTS AND ATTORNEYS' FEES) OF ANY NATURE, KIND OR DESCRIPTION OF ANY PERSON (INCLUDING, WITHOUT LIMITATION, THE EMPLOYEES OF THE PARTIES HERETO) OR ENTITY DIRECTLY OR INDIRECTLY (COLLECTIVELY, "LIABILITIES") ARISING OUT OF, RESULTING FROM OR CAUSALLY RELATED TO (IN WHOLE OR IN PART):

(i) ANY RIGHTS OR INTERESTS GRANTED TO CONTRACTOR PURSUANT TO THIS AGREEMENT;

(ii) THE USE, OCCUPANCY OR PRESENCE OF CONTRACTOR AND CONTRACTOR PARTIES (DEFINED BELOW) AND/OR ANY WORK PERFORMED BY CONTRACTOR AND CONTRACTOR PARTIES IN, ON, OR ABOUT RAILWAY'S PROPERTY OR RIGHT-OF-WAY AND/OR THE WEST HAYMARKET PROJECT, INCLUDING, WITHOUT LIMITATION, OPERATION OF THE PEDESTRIAN BRIDGE, SECURITY FENCING, OR STORM WATER MITIGATION BY ANY CONTRACTOR PARTY (DEFINED BELOW);

(iii) ANY ENVIRONMENTAL MATTERS ARISING FROM CONTRACTOR AND/OR CONTRACTOR PARTIES' USE AND OCCUPANCY OF RAILWAY'S RIGHT-OF-WAY OR OTHER RAILWAY PROPERTY, INCLUDING WITHOUT LIMITATION USE AND OCCUPANCY OF RAILWAY'S RIGHT-OF-WAY OR OTHER RAILWAY PROPERTY IN CONNECTION WITH PERFORMANCE OF THE C&M WORK;

(iv) ANY DAMAGE TO OR DESTRUCTION OF ANY TELECOMMUNICATION LINES IN CONNECTION WITH THE WEST HAYMARKET PROJECT BY CONTRACTOR AND/OR CONTRACTOR PARTIES, INCLUDING BUT NOT LIMITED TO (A) ANY INJURY TO OR DEATH OF ANY PERSON EMPLOYED BY OR ON BEHALF OF ANY TELECOMMUNICATIONS COMPANY, AND/OR ITS CONTRACTORS, AGENTS AND/OR EMPLOYEES AS A RESULT OF SUCH DAMAGE OR DESTRUCTION, AND/OR (B) ANY CLAIM OR CAUSE OF ACTION FOR ALLEGED LOSS OF PROFITS OR REVENUE BY, OR LOSS OF SERVICE BY A CUSTOMER OR USER OF SUCH TELECOMMUNICATION COMPANY(IES) AS A RESULT OF SUCH DAMAGE OR DESTRUCTION;

(v) CONTRACTOR'S BREACH OF THE TERMS AND CONDITIONS OF THIS AGREEMENT; OR

(vi) ANY ACT OR OMISSION OF CONTRACTOR OR ITS OFFICERS, AGENTS, INVITEES, EMPLOYEES OR SUBCONTRACTORS (SUCH OFFICERS, AGENTS, INVITEES, EMPLOYEES AND SUBCONTRACTORS BEING REFERRED TO HEREIN INDIVIDUALLY AS A "CONTRACTOR PARTY" AND COLLECTIVELY, "CONTRACTOR PARTIES"), OR ANYONE DIRECTLY OR INDIRECTLY EMPLOYED BY ANY OF THEM, OR ANYONE THEY CONTROL OR EXERCISE CONTROL OVER.

THE LIABILITY ASSUMED BY CONTRACTOR WILL NOT BE AFFECTED BY THE FACT, IF IT IS A FACT, THAT ANY DAMAGE, DESTRUCTION, INJURY OR DEATH WAS OCCASIONED BY OR CONTRIBUTED TO BY THE NEGLIGENCE OF RAILWAY, ITS AGENTS, SERVANTS, EMPLOYEES OR OTHERWISE, BUT EXCLUDING CLAIMS WHOLLY CAUSED BY RAILWAY'S SOLE NEGLIGENCE AND EXCLUDING CLAIMS TO THE EXTENT THAT SUCH CLAIMS ARE CAUSED BY THE WILLFUL MISCONDUCT OR GROSS NEGLIGENCE OF RAILWAY.

FURTHER, TO THE FULLEST EXTENT PERMITTED BY LAW, CONTRACTOR AGREES, REGARDLESS OF ANY NEGLIGENCE OR ALLEGED NEGLIGENCE OF RAILWAY, TO INDEMNIFY, DEFEND AND HOLD HARMLESS RAILWAY AGAINST AND ASSUME THE DEFENSE OF ANY LIABILITIES ASSERTED AGAINST OR SUFFERED BY RAILWAY UNDER OR RELATED TO THE FEDERAL EMPLOYERS' LIABILITY ACT ("FELA") WHENEVER EMPLOYEES OF CONTRACTOR OR ANY CONTRACTOR PARTY CLAIM OR ALLEGE THAT THEY ARE EMPLOYEES OF RAILWAY OR OTHERWISE. THIS INDEMNITY SHALL ALSO EXTEND, ON THE SAME BASIS, TO FELA CLAIMS BASED ON ACTUAL OR ALLEGED VIOLATIONS OF ANY FEDERAL, STATE OR LOCAL LAWS OR REGULATIONS, INCLUDING BUT NOT LIMITED TO THE SAFETY APPLIANCE ACT, THE LOCOMOTIVE INSPECTION ACT, THE OCCUPATIONAL SAFETY AND HEALTH ACT, THE RESOURCE

CONSERVATION AND RECOVERY ACT, AND ANY SIMILAR STATE OR FEDERAL STATUTE.

Contractor further agrees, at its expense, in the name and on behalf of Railway, that it will adjust and settle all Liabilities against Railway, and will, at Railway's discretion, appear and defend any suits or actions of law or in equity brought against Railway on any claim or cause of action arising out of any liability assumed by Contractor under this Agreement for which Railway is liable or is alleged to be liable. Railway will give notice to Contractor, in writing, of the receipt or dependency of such claims and thereupon Contractor must proceed to adjust and handle to a conclusion such claims, and in the event of a suit being brought against Railway, Railway may forward summons and complaint or other process in connection therewith to Contractor, and Contractor, at Railway's discretion, must defend, adjust, or settle such suits and protect, indemnify, and save harmless Railway from and against all Liabilities arising out of any such claims or suits, provided that the foregoing indemnification obligations do not include Liabilities arising wholly out of the sole negligence of Railway or to the extent caused by the gross negligence or willful misconduct of Railway.

In addition to any other provision of this Agreement, in the event that all or any portion of this Article shall be deemed to be inapplicable for any reason, including without limitation as a result of a decision of an applicable court, legislative enactment or regulatory order, the parties agree that this Article shall be interpreted as requiring Contractor to indemnify Railway to the fullest extent permitted by applicable law. **THROUGH THIS AGREEMENT THE PARTIES EXPRESSLY INTEND FOR CONTRACTOR TO INDEMNIFY RAILWAY FOR RAILWAY'S ACTS OF NEGLIGENCE, BUT EXCLUDING CLAIMS WHOLLY CAUSED BY RAILWAY'S SOLE NEGLIGENCE AND EXCLUDING CLAIMS TO THE EXTENT THAT SUCH CLAIMS ARE CAUSED BY THE WILLFUL MISCONDUCT OR GROSS NEGLIGENCE OF RAILWAY.**

It is mutually understood and agreed that the assumption of liabilities and indemnification provided for in this Agreement survive any termination of this Agreement.

Section 2. TERM

This Agreement is effective from the date of the Contract until (i) the completion of the project set forth herein, and (ii) full and complete payment to Railway of any and all sums or other amounts owing and due hereunder.

Section 3. INSURANCE

Contractor must, at its sole cost and expense, procure and maintain during the life of this Agreement the following insurance coverage:

A. Commercial General Liability Insurance. This insurance shall contain broad form contractual liability with a combined single limit of a minimum of $2,000,000.00 per occurrence, and $4,000,000.00 in the aggregate, but in no event less than the amount otherwise carried by the Contractor. Coverage must be purchased on a post 1998 ISO occurrence form or equivalent and include coverage for, but not limited to, the following:
    - Bodily Injury and Property Damage
    - Personal Injury and Advertising Injury
    - Fire legal liability
    - Products and completed operations

This policy shall also contain the following endorsements, which shall be indicated on the certificate of insurance:

- The definition of insured contract shall be amended to remove any exclusion or other limitation for any work being done within 50 feet of railroad property.
- Waiver of subrogation in favor of and acceptable to Railroad.
- Additional insured endorsement in favor of and acceptable to Railroad.
- Separation of insureds.
- The policy shall be primary and non-contributing with respect to any insurance carried by Railroad.

It is agreed that the workers' compensation and employers' liability related exclusions in the Commercial General Liability insurance policy(s) required herein are intended to apply to employees of the policy holder and shall not apply to Railroad employees.

No other endorsements limiting coverage as respects obligations under this Agreement may be included on the policy with regard to the work being performed under this Agreement.

B. Business Automobile Insurance. This insurance shall contain a combined single limit of at least $1,000,000 per occurrence, and include coverage for, but not limited to the following:

- Bodily injury and property damage
- Any and all vehicles owned, used or hired

This policy shall also contain the following endorsements or language, which shall be indicated on the certificate of insurance:

- Waiver of subrogation in favor of and acceptable to Railroad.
- Additional insured endorsement in favor or and acceptable to Railroad.
- Separation of insureds.
- The policy shall be primary and non-contributing with respect to any insurance carried by Railroad.

C. Workers Compensation and Employers Liability Insurance. This insurance shall include coverage for, but not limited to:

- Contractor's statutory liability under the worker's compensation laws of the state(s) in which the work is to be performed. If optional under State law, the insurance must cover all employees anyway.
- Employers' Liability (Part B) with limits of at least $500,000 each accident, $500,000 by disease policy limit, $500,000 by disease each employee.

This policy shall also contain the following endorsements or language, which shall be indicated on the certificate of insurance:

- Waiver of subrogation in favor of and acceptable to Railroad.

D. Railroad Protective Liability Insurance. This insurance shall name only the Railroad as the Insured with coverage of at least $5,000,000 per occurrence and $10,000,000 in the aggregate. The policy shall be issued on a standard ISO form CG 00 35 10 93 and include the following:

- *Endorsed to include the Pollution Exclusion Amendment (ISO form CG 28 31 10 93)*
- Endorsed to include the Limited Seepage and Pollution Endorsement.

- Endorsed to remove any exclusion for punitive damages.
- No other endorsements restricting coverage may be added.
- The original policy must be provided to Railroad prior to performing any work or services under this Agreement

In lieu of providing a Railroad Protective Liability Policy, Contractor may participate in BNSF's Blanket Railroad Protective Liability Insurance Policy available to Contractor.

Other Requirements:

All policies (applying to coverage listed above) must not contain an exclusion for punitive damages and certificates of insurance must reflect that no exclusion exists.

Contractor agrees to waive its right of recovery against Railroad for all claims and suits against Railroad, except for claims and suits arising wholly out of the sole negligence, or to the extent caused by the gross negligence or willful misconduct, of Railroad. In addition, its insurers, through the terms of the policy or policy endorsement, waive their right of subrogation against Railroad for all claims and suits, except for claims and suits arising wholly out of the sole negligence, or to the extent caused by the gross negligence of willful misconduct, of Railroad. The certificate of insurance must reflect the waiver of subrogation endorsement. Contractor further waives its right of recovery, and its insurers also waive their right of subrogation against Railroad for loss of its owned or leased property or property under Contractor's care, custody or control, except for the right of recovery or right of subrogation arising wholly out of the sole negligence, or to the extent caused by the gross negligence or willful misconduct, of Railroad.

Contractor is not allowed to self-insure without the prior written consent of Railroad. If granted by Railroad, any deductible, self-insured retention or other financial responsibility for claims must be covered directly by Contractor in lieu of insurance. Any and all Railroad liabilities that would otherwise, in accordance with the provisions of this Agreement, be covered by Contractor's insurance will be covered as if Contractor elected not to include a deductible, self-insured retention or other financial responsibility for claims.

Prior to commencing the C&M Work, Contractor must furnish to Railroad acceptable certificate(s) of insurance including an original signature of the authorized representative evidencing the required coverage, endorsements, and amendments. The policy(ies) must contain a provision that obligates the insurance company(ies) issuing such policy(ies) to notify Railroad in writing at least 30 days prior to any cancellation, non-renewal, substitution or material alteration. This cancellation provision must be indicated on the certificate of insurance. Upon request from Railroad, a certified duplicate original of any required policy must be furnished. Certificate(s) should be sent to the following address:

Ebix BPO
PO Box 12010-BN
Hemet, CA 92546-8010
Fax number: 951-652-2882
Email: bnsf@ebix.com

Any insurance policy must be written by a reputable insurance company reasonably acceptable to Railroad or with a current Best's Guide Rating of A- and Class VII or better, and authorized to do business in the state(s) in which the service is to be provided.

Contractor represents that this Agreement has been thoroughly reviewed by Contractor's insurance agent(s)/broker(s), who have been instructed by Contractor to procure the insurance coverage required by this Agreement. Allocated Loss Expense must be in addition to all policy limits for coverages referenced above.

Not more frequently than once every five years, Railroad may reasonably modify the required insurance coverage to reflect then-current risk management practices in the railroad industry and underwriting practices in the insurance industry.

If any portion of the operation is to be subcontracted by Contractor, Contractor must require that its subcontractors provide and maintain the insurance coverages set forth herein, naming Railroad as an additional insured, and requiring that the subcontractors release, defend and indemnify Railroad to the same extent and under the same terms and conditions as Contractor is required to release, defend and indemnify Railroad herein.

Failure to provide evidence as required by this section will entitle, but not require, Railroad to immediately suspend work under this Agreement until such evidence is provided. Acceptance of a certificate that does not comply with this section will not operate as a waiver of Contractor's obligations hereunder.

The fact that insurance (including, without limitation, self-insurance) is obtained by Contractor will not be deemed to release or diminish the liability of Contractor including, without limitation, liability under the indemnity provisions of this Agreement. Damages recoverable by Railroad will not be limited by the amount of the required insurance coverage.

For purposes of this section, Railroad means "Burlington Northern Santa Fe, LLC", "BNSF Railway Company" and the subsidiaries, successors, assigns and affiliates of each.

Section 4. EXHIBIT C CONTRACTOR REQUIREMENTS

The Contractor must observe and comply with all provisions, obligations, requirements and limitations contained in the Contract, and the Contractor Requirements set forth on Exhibit C attached to this Agreement and the Contract, including, but not be limited to, payment of all costs incurred for any damages to Railway roadbed, tracks, and/or appurtenances thereto, resulting from use, occupancy, or presence of its employees, representatives, or agents or subcontractors on or about the construction site.

Section 5. TRAIN DELAY

Contractor is responsible for and hereby indemnifies and holds harmless Railway (including its affiliated railway companies, and its tenants) for, from and against all damages arising from any unscheduled delay to a freight or passenger train which affects Railway's ability to fully utilize its equipment and to meet customer service and contract obligations. Contractor will be billed, as further provided below, for the economic losses arising from loss of use of equipment, contractual loss of incentive pay and bonuses and contractual penalties resulting from train delays, whether caused by Contractor, or subcontractors, or by the Railway performing work under this Agreement. Railway agrees that it will not perform any act to unnecessarily cause train delay.

For loss of use of equipment, Contractor will be billed the current freight train hour rate per train as determined from Railway's records. Any disruption to train traffic may cause delays to multiple trains at the same time for the same period.

Additionally, the parties acknowledge that passenger, U.S. mail trains and certain other grain, intermodal, coal and freight trains operate under incentive/penalty contracts between Railway and its customer(s). Under these arrangements, if Railway does not meet its contract service commitments, Railway may suffer loss of performance or incentive pay and/or be subject to penalty payments. Contractor is responsible for any train performance and incentive penalties or other contractual economic losses actually incurred by Railway which are attributable to a train delay caused by Contractor or its subcontractors.

The contractual relationship between Railway and its customers is proprietary and confidential. In the event of a train delay covered by this Agreement, Railway will share information relevant to any train delay to the extent consistent with Railway confidentiality obligations. Damages for train delay are currently $382.20 per hour per incident. **THE RATE THEN IN EFFECT AT THE TIME OF PERFORMANCE BY THE CONTRACTOR HEREUNDER WILL BE USED TO CALCULATE THE ACTUAL COSTS OF TRAIN DELAY PURSUANT TO THIS AGREEMENT.**

Contractor and its subcontractors must give Railway's Project Engineer (402) 458-7537 thirty (30) days' minimum advance notice of the times and dates for proposed work windows. Railway and Contractor will establish mutually agreeable work windows for the project. Railway has the right at any time to revise or change the work windows due to train operations or service obligations. Railway will not be responsible for any additional costs or expenses resulting from a change in work windows. Additional costs or expenses resulting from a change in work windows shall be accounted for in Contractor's expenses for the project.

Contractor and subcontractors must plan, schedule, coordinate and conduct all Contractor's work so as to not cause any delays to any trains.

[Signature page follows]

Kindly acknowledge receipt of this letter by signing and returning to the Railway two original copies of this letter, which, upon execution by Railway, will constitute an Agreement between us.

_____	
(Contractor)	**BNSF Railway Company**
By:_____	By:_____
Printed Name: _____	Name:_____
Title:_____	*Project Engineer*
Contact Person: _____	Accepted and effective this _____day of 20__.
Address: _____	
_____	
City:_____ State:___ Zip:____	
Fax: _____	
Phone: _____	
E-mail:_____	

EXHIBIT D

Final Clearances

Pursuant to the provisions of **Section 3.1.3** of the C&M Agreement, approved Final Clearances for each segment of City C&M Work being constructed pursuant to the City Work Final Design are attached hereto as **Exhibit D**.

EXHIBIT E

Soil Management Plan

In addition to and not in limitation of the requirements and obligations of City and City Contractors contained in the C&M Agreement, the following requirements shall apply to City and City Contractors with respect to management of impacted environmental media. In the event of conflicts between the terms of this **Exhibit E** and the rest of the C&M Agreement, including but not limited to the provisions of **Exhibit C** and, as applicable, **Exhibit C-1(A)** or **Exhibit C-1(B)**, the most restrictive provisions shall apply to City and City Contractors.

Proper Management of Impacted Media

1. Access

Access to the West Haymarket Redevelopment Site (WHRS) is restricted to railroad and City of Lincoln personnel and contractors conducting work in their official capacity as employees or contractors of their respective organizations. Access to Railroad operating property for purposes of providing construction – related services is subject to specific safety and rules training certifications and requirements found at: **www.contractororientation.com**. Access to other non-railroad private property for purposes of performing construction – related services within the WHRS must be arranged through the EPMT.

2. Management Practices

Due to the potential risks and penalties involved in management of impacted media and protection of rare and unique saline wetlands as well as the wide applicability of these issues to planned construction activity, prescriptive management practices for these areas are as follows:

2.1 Impacted Soil and Debris Management

Attachment 3 - NDEQ Environmental Guidance Document 05-061 "Investigation Derived Waste and Remediation Considerations" (GD 05-061) is provided as reference. Relevant and critical points extracted from GD 05-061 as well as NDEQ's Title 132 (Integrated Solid Waste Management Regulations) for purposes of implementation and compliance is as follows:

1. A fundamental premise regarding the regulatory status of any soils, debris or other media encountered during intrusive activities is that such items are not considered waste material until determined by the Project Manager in consultation with the Technical Representative to be no longer suitable for its intended purpose.

2. Title 132, Chapter 1, Section 041 defines fill as: "*solid waste that consists only of one or more of the following: sand, gravel, stone, soil, rock, brick, concrete rubble, asphalt rubble, or similar material*".

3. The "*use of fill for legitimate land improvement (backfilling a foundation) is allowed per Title 132, Chapter 2, Section 002.01 as long as the fill is not mixed with other solid wastes that have the potential to cause contamination that may threaten human health or the environment*".

4. From pg. 2 of NDEQ GD 05-161: "*Activity not related to investigation or remediation is not considered "active management" under the waste regulations. For example, routine trench or foundation excavation spoils that are generated at a site that is not a remediation or investigation activity site or are not related to remediation or investigation activities are not considered a waste unless it is intended for disposal. Such spoils could normally be replaced in the excavation.*"

5. Prior to initiation of each construction task, the project manager will consult with the technical representative to determine the type of material anticipated to be excavated, potential

contaminants of concern (if any) and allowable re-use (including use as fill), alternatives to be employed for excess soil or debris to be generated associated with his/her respective work task. The project manager will work with the construction representative and advise where excess soils or debris shall be stored. Provisions for temporary storage of potentially impacted soil/debris must be explicitly agreed upon.

2.2 Grading/Excavation

Construction grading and excavation activities associated with applicable WHRS project activities require coordination and compliance as follows:

1. Grading/excavation project manager/contractor's representative (PM/CR) must contact the Technical Representative (TR) at least 14 days prior to initiation of grading/excavation work to discuss anticipated conditions and any special precautions to consider.

2. The PM/CR must arrange for all utility clearance.

3. The PM/CR must meet with the TR to discuss task – specific precautions (as detailed in any and all applicable work activities described in this Section).

4. A TR must be on-site or on call to respond to questions or observations that could require sampling or determinations relevant to management of impacted soil or debris. ***It is the responsibility of the PM/CR to notify the TR of construction schedules and activities (including any changes in schedules or scope of work effort) that may require on-site support and observation***.

5. Unless superseded by other special considerations, grading/excavation activities may proceed per the contractual project/task plans and specifications.

6. Changing field considerations and observations (including encountering suspect soils/debris/other media or modifications of proposed areas/volumes of soil grading/excavation/filling) must be reported to the TR.

7. If during execution of contractual plans and specifications the PM/CR determines the need to manage excess soils/debris/other media) not previously addressed, the PM/CR will consult with the TR to discuss management of affected media. Resolution and ultimate fate of the affected media will be documented by the TR.

8. Work shutdown will be at the discretion of the PM/CR's corporate health and safety policies and practices.

2.3 Utility Work

Contractors performing utility work including all intrusive work (trenching, boring, digging, etc.) where surface features (soil, concrete, asphalt, vegetated surfaces) will be disturbed require conformance to the following procedures:

1. The utility project manager/contractor's representative (PM/CR) must contact the TR at least 14 days prior to initiation of intrusive utility work to discuss anticipated conditions and any special precautions to consider.

2. The PM/CR must arrange for all related utility clearance.

3. The PM/CR must meet with the TR to discuss task – specific precautions (as detailed in any and all applicable work activities described in this Section).

4. A TR must be on-site or on call to respond to questions or observations that could require sampling or determinations relevant to management of impacted soil or debris. ***It is the***

responsibility of the PM/CR to notify the TR of construction schedules and activities (including any changes in schedules or scope of work effort) that may require on-site support and observation.

5. Unless superseded by other special considerations, utility construction activities may proceed per the contractual project/task plans and specifications.

6. Changing field considerations and observations (including encountering suspect soils/debris/other media or modifications of proposed routes of utility corridors) must be immediately reported to the TR.

7. In general, soil/debris/spoils which will not be removed from the site can be used as backfill around utilities if determined by the PM/CR to be suitable fill material and the material has no appearance of contamination or odor. Soil/debris/spoils removed during the course of intrusive utility work with an appearance of contamination or odor will be immediately notified to the TR for consultation and resolution including temporary storage of the suspect material.

8. If during execution of contractual plans and specifications the PM/CR determines there is a need to manage excess soils/debris/other media) not previously addressed, the PM/CR will consult with the TR to discuss management of affected media. Resolution and ultimate fate of the affected media will be documented by the TR.

9. Work shutdown will be at the discretion of the PM/CR's corporate health and safety policies and practices.

SPILL/INCIDENT RESPONSE REFERRAL SHEET

SPILL REPORTING

First Call:

Environmental Project Management Team Technical Representatives:

Frank Uhlarik – Alfred Benesch & Company:	**402-333-5792**
	Cell: 402-669-0546
Alternate:	
Bill Imig – Olsson Associates:	**402-458-5903**
	Cell: 402-314-4568
Alternate:	
Miki Esposito – Environmental Project Management Team:	**402-441-6173**

Agencies/Railroad Authorities:

Nebraska Department of Environmental Quality:	**402-471-2186 or 877-253-2603**

After Hours, Weekends and Holidays:

Nebraska State Patrol Dispatch:	**402-471-4545**
BNSF Railway Company Resource Operations Center:	**800-832-5452**
Union Pacific Railroad Security:	**888-877-7267**
National Response Center:	**800-424-8802**

ALL OTHER INCIDENTS

Fire and Police: **Dial 911**

LIST OF ACRONYMS

CR	Contractor's Representative
SMP	Soil Management Plan
EPMT	City of Lincoln Environmental Project Management Team
PM	Project Manager
TR	Environmental Project Management Team Technical Representative
WHRS	West Haymarket Redevelopment Site

EXHIBIT D

Other Contract Documents

COMMENTARY TO ACCOMPANY CONSTRUCTION BONDS

A. GENERAL INFORMATION

There are two types of construction bonds that are required by statutes for public work in many jurisdictions and are widely used for other projects as well.

Construction Performance Bond
Construction Payment Bond

The Construction Performance Bond is an instrument that is used to assure the availability of funds to complete the construction.

The Construction Payment Bond is an instrument that is used to assure the availability of sufficient funds to pay for labor, materials and equipment used in the construction. For public work the Construction Payment Bond provides rights of recovery for workers and suppliers similar to their rights under the mechanics lien laws applying to private work.

The objective underlying the re-writing of construction bond forms was to make them more understandable to provide guidance to users. The intention was to define the rights and responsibilities of the parties, without changing the traditional rights and responsibilities that have been decided by the courts. The new bond forms provide helpful guidance regarding time periods for various notices and actions and clarify the extent of available remedies.

The concept of pre-default meeting has been incorporated into the Construction Performance Bond. All of the participants favored early and informal resolution of the problems that may precipitate a default, but some Surety companies were reluctant to participate in pre-default settings absent specific authorization in the bond form.

The responsibilities of the Owner and the options available to the Surety when a default occurs are set forth in the Construction Performance Bond. Procedures for making a claim under the Construction Payment Bond are set forth in the form.

EJCDC recommends the use of two separate bonds rather than a combined form. Normally the amount of each bond is 100 percent of the contract amount. The bonds have different purposes and are separate and distinct obligations of the Surety. The Surety Association reports that the usual practice is to charge a single premium for both bonds and there is no reduction in premium for using a combined form or for issuing one bond without the other.

B. COMPLETING THE FORMS

Bonds have important legal consequences; consultation with an attorney and a bond specialist is encouraged with respect to federal, state and local laws applicable to bonds and with respect to completing or modifying the bond forms.

Both bond forms have a similar format and the information to be filled in is ordinarily the same on both bonds. If modification is necessary, the modifications may be different.

The bond forms are prepared for execution by the Contractor and the Surety. Evidence of authority to bind the Surety is usually provided in the form of a power of attorney designating the agent who is authorized to sign on behalf of the Surety. The power of attorney should be filed with the signed bonds.

Each bond must be executed separately since they cover separate and distinct obligations.

Preferably the bond date should be the same date as the contract, but in no case should the bond date precede the date of the contract.

CONSTRUCTION PERFORMANCE BOND

Any singular reference to Contractor, Surety, Owner or other party shall be considered plural where applicable.

CONTRACTOR (Name and Address):

SURETY (Name and Principal Place of Business):

Owner (Name and Address):
West Haymarket Joint Public Agency
555 South 10th St.
Lincoln, NE 68508

CONSTRUCTION CONTRACT
Date:
Amount:

Description (Name and Location):
For all labor, material and equipment necessary for (Bid Name and Number)

BOND
Date:
Amount:
Modifications to this Bond Form:

CONTRACTOR AS PRINCIPAL
Company: (Corp. Seal)

SURETY
Company: (Corp.Seal)

Signature:_____
Name and Title: Name and Title:

Signature:_____

EJCDC NO. 1910-28a (1984 Edition)
Prepared through the joint efforts of The Surety Assoc. of America. Engineers' Joint Contract Documents Committee. The Associated General Contractors of America, and the American Institute of Architects.

1. The Contractor and the Surety, jointly and severally, bind themselves their heirs, executors, administrators, successors and assigns to the Owner for the performance of the Construction Contract, which is incorporated herein by reference.

2. If the Contractor performs the Construction Contract, the Surety and the Contractor shall have no obligation under this Bond, except to participate in conferences as provided in Subparagraph 3.1.

3. If there is no Owner Default, the Surety's obligation under this Bond shall arise after:

3.1 The Owner has notified the Contractor and the Surety at its address described in Paragraph 10 below, that the Owner is considering declaring a Contractor Default and has requested and attempted to arrange a conference with the Contractor and the Surety to be held not later than fifteen days after receipt of such notice to discuss methods of performing the Construction Contract. If the Owner, the Contractor and the Surety agree, the Contractor shall be allowed a reasonable time to perform the Construction Contract, but such an agreement shall not waive the Owner's right, if any, subsequently to declare a Contractor Default and

3.2 The Owner has declared a Contractor Default and formally terminated the Contractor's right to complete the contract. Such Contractor Default shall not be declared earlier than twenty days after the Contractor and the Surety have received notice as provided in Sub-paragraph 3.1; and

3.3 The Owner has agreed to pay the Balance of the Contract Price to the Surety in accordance with the terms of the Construction Contract or to a contractor selected to perform the Construction Contract in accordance with the terms of the contract with the Owner.

4. When the Owner has satisfied the conditions of Paragraph 3, the Surety shall promptly and at the Surety's expense take one of the following actions:

4.1 Arrange for the Contractor, with consent of the Owner, to perform and complete the Construction Contract, or

4.2 Undertake to perform and complete the Construction Contract itself, through its agents or through independent contractors: or

4.3 Obtain bids or negotiated proposals from qualified contractors acceptable to the Owner for a contract for performance and completion of the Construction Contract, arrange for a contract to be prepared for execution by the Owner and the contractor selected with the Owner's concurrence, to be secured with performance and payment bonds executed by a qualified surety equivalent to the bonds issued on the Construction Contract, and pay to the Owner the amount of damages as described in Paragraph 6 in excess of the Balance of the Contract Price incurred by the Owner resulting from the Contractor's default, or

4.4 Waive its right to perform and complete, arrange for completion, or obtain a new contractor and with reasonable promptness under the circumstances:

1. After investigation, determine the amount for which it may be liable to the Owner and as soon as practiceable after the amount is determined tender payment therefore to the Owner; or

2. Deny liability in whole or in part and notify the Owner citing reasons therefore.

5. If the Surety does not proceed as provided in Paragraph 4 with reasonable promptness, the Surety shall be deemed to be in default on this Bond fifteen days after receipt of an additional written notice from the Owner to the Surety demanding that the Surety perform its obligations under this Bond, and the Owner shall be entitled to enforce any remedy available to the Owner. If the Surety proceeds as provided in Subparagraph 4.4 and the Owner refuses payment tendered or the Surety has denied liability, in whole or in part, without further notice the Owner shall be entitled to enforce any remedy available to the Owner.

6. After the Owner has terminated the Contractor's right to complete the Construction Contract, and if the Surety elects to act under Subparagraph 4.1, 4.2, or 4.3 above, then the responsibilities of the Surety to the Owner shall not be greater than those of the Contractor under the Construction Contract, and the responsibilities of the Owner to the Surety shall not be greater than those of the Owner under the Construction Contract. To the limit of the amount of this Bond, but subject to commitment by the Owner of the Balance of the Contract Price to mitigation of costs and damages on the Construction Contract, the Surety is obligated without duplication for:

6.1 The responsibilities of the Contractor for correction of defective work and completion of the Construction Contract;

6.2 Additional legal, design professional and delay costs resulting from the Contractor's Default, and resulting from the actions or failure to act of the Surety under Paragraph 4; an d

6.3 Liquidated damages, or if no liquidated damages are specified in the Construction Contract, actual damages caused by delayed performance or non-performance of the Contractor.

7. The Surety shall not be liable to the Owner or others for obligations of the Contractor that are unrelated to the Construction Contract, and the Balance of the Contract Price shall not be reduced or set off on account of any such unrelated obligations. No right of action shall accrue on this Bond to any person or entity other than the Owner or its heirs, executors, administrators, or successors.

8. The Surety hereby waives notice of any change, including changes of time, to the Construction Contract or to related sub-contracts, purchase orders and other obligations.

9. Any proceeding, legal or equitable, under this Bond may be instituted in any court of competent jurisdiction in the location in which the work or part of the work is located and shall be instituted within two years after Contractor Default or within two years after the Contractor ceased working or within two years after the Surety refuses or fails to perform its obligations under this Bond, whichever occurs first. If the provisions of this Paragraph are void or prohibited by law, the minimum period of limitation available to sureties as a defense in the jurisdiction of the suit shall be applicable.

10. Notice to the Surety, the Owner or the Contractor shall be mailed or delivered to the address shown on the signature page.

11. When this Bond has been furnished to comply with a satutory or other legal requirement in the location where the construction was to be performed, any provision in this Bond conflicting with said statutory or legal requirement shall be deemed deleted herefrom and provisions conforming to such statutory or other legal requirement shall be deemed incorporated herein. The intent is that this Bond shall be construed as a statutory bond and not as a common law bond.

12. Definitions.

12.1 Balance of the Contract Price: The total amount payable by the Owner to the Contractor under the Construction Contract after all proper adjustments have been made, including allowance to the Contractor of any amounts received or to be received by the Owner in settlement of insurance or other claims for damages to which the Contractor is entitled, reduced by all valid and proper payments made to or on behalf of the Contractor under the Construction Contract.

12.2 Construction Contract: The agreement between the Owner and the Contractor identified on the signature page, including all Contract Documents and changes thereto.

12.3 Contractor Default: Failure of the Contractor, which has neither been remedied nor waived, to perform or otherwise to comply with the terms of the Construction Contract.

12.4 Owner Default: Failure of the Owner, which has neither been remedied nor waived, to pay the Contractor as required by the Construction Contract or to perform and complete or comply with the other terms thereof.

CONSTRUCTION PAYMENT BOND

Any singular reference to Contractor, Surety, Owner or other party shall be considered plural where applicable.

CONTRACTOR (Name and Address):

SURETY (Name and Principal Place Of Business):

Owner (Name and Address):
West Haymarket Joint Public Agency
555 South 10th St.
Lincoln, NE 68508

CONSTRUCTION CONTRACT
Date:
Amount:

Description (Name and Location):
For all labor, material and equipment necessary for (Bid Name and Number)

BOND
Date:
Amount:

Modifications to this Bond Form:

CONTRACTOR AS PRINCIPAL
Company: (Corp. Seal)

SURETY
Company: (Corp. Seal)

Signature: _____

Name and Title:

Signature: _____

Name and Title:

EJCDC NO. 1910-28B (1984 Edition)
Prepared through the joint efforts of The Surety Assoc. of America. Engineers' Joint Contract Documents Committee. The Associated General Contractors of America, and the American Institute of Architects.

1. The Contractor and the Surety, jointly and severally, bind themselves their heirs, executors, administrators, successors and assigns to the Owner to pay for labor, materials and equipment furnished for use in the performance of the Construction Contract, which is incorporated herein by reference.
2. With respect to the Owner, this obligation shall be null and void if the Contractor:

   2.1 Promptly makes payment, directly or indirectly, for all sums due Claimants, and

   2.2 Defends, indemnifies and holds harmless the Owner from all claims, demands, liens or suits by any person or entity who furnished labor, materials or equipment for use in the performance of the Construction Contract, provided the Owner has promptly notified the Contractor and the Surety (at the address described in Paragraph 12) of any claims, demands, liens or suits and tendered defense of such claims, demands, liens or suits to the Contractor and the Surety, and provided there is no Owner Default.
3. With respect to Claimants, this obligation shall be null and void if the Contractor promptly makes payment, directly or indirectly, for all sums due.
4. The Surety shall have no obligation to Claimants under this Bond until:

   4.1 Claimants who do not have a direct contract with the Contractor have given notice to the Surety (at the address described in Paragraph 12) and sent a copy, or notice thereof to the Owner, stating that a claim is being made under this Bond and with substantial accuracy the amount of the claim.

   4.2 Claimants who do not have a direct contract with the Contractor:

   1.Have furnished written notice to the Contractor and sent a copy, or notice thereof, to the Owner, within 90 days after having last performed labor or last furnished materials or equipment included in the claim stating, with substantial accuracy, the amount of the claim and the name of the party to whom the materials were furnished or supplied or for whom the labor was done or performed, and

   2.Have either received a rejection in whole or in part from the Contractor, or not received within 30 days of furnishing the above notice any communication from the Contractor by which the Contractor has indicated the claim will be paid directly or indirectly; and

   3.Not having been paid within the above 30 days, have sent a written notice to the Surety (at the address described in Paragraph 12) and sent a copy, or notice thereof, to the Owner, stating that a claim is being made under this Bond and enclosing a copy of the previous written notice furnished to the Contractor.
5. If a notice required by Paragraph 4 is given by the Owner to the Contractor or to the Surety, that is sufficient compliance.
6. When the Claimant has satisfied the conditions of Paragraph 4, the Surety shall promptly and at the Surety's expense take the following actions:

   6.1 Send an answer to the Claimant, with a copy to the Owner, within 45 days after receipt of the claim, stating the amounts that are undisputed and the basis for challenging any amounts that are disputed.

   6.2 Pay or arrange for payment of any undisputed amounts.
7. The Surety's total obligation shall not exceed the amount of this Bond, and the amount of this Bond shall be credited for any payments made in good faith by the Surety.
8. Amounts owed by the Owner to the Contractor under the Construction Contract shall be used for the performance of the Construction Contract and to satisfy claims, if any, under any Construction Performance Bond. By the Contractor furnishing and the Owner accepting this Bond, they agree that all funds earned by the Contractor in the performance of the Construction Contract are dedicated to satisfy obligations of the Contractor and the Surety under this Bond, subject to the Owner's priority to the funds for the completion of the work.
9. The Surety shall not be liable to the Owner, Claimants or others for obligations of the Contractor that are unrelated to the Construction Contract. The Owner shall not be liable for payment of any costs or expenses of any Claimant under this Bond, and shall have under this Bond no obligations to make payments to, give notices on behalf of, or otherwise have obligations to Claimants under this Bond.
10. The Surety hereby waives notice of any change, including changes of time, to the Construction Contract or to related subcontracts, purchase orders and other obligations.
11. No suite or action shall be commenced by a Claimant under this Bond other than in a court of competent jurisdiction in the location in which the work or part of the work is located or after the expiration of one year from the date (1) on which the Claimant gave the notice required by Subparagraph 4.1 or Clause 4.1 (iii), or (2) on which the last labor or service was performed by anyone or the last materials or equipment were furnished by anyone under the Construction Contract, whichever of (1) or (2) first occurs. If the provisions of this Paragraph are void or prohibited by law, the minimum period of limitation available to sureties as a defense in the jurisdiction of the suit shall be applicable.
12. Notice to the Surety, the Owner or the Contractor shall be mailed or delivered to the address shown on the signature page. Actual receipt of notice by Surety, the Owner or the Contractor, however accomplished, shall be sufficient compliance as of the date received at the address shown on the signature page.
13. When this Bond has been furnished to comply with a statutory or other legal requirement in the location where the construction was to be performed, any provision in this Bond conflicting with said statutory or legal requirement shall be deemed deleted here from and provisions conforming to such statutory or other legal requirement shall be deemed incorporated herein. The intent is, that this Bond shall be construed as a statutory bond and not as a common law bond.
14. Upon request by any person or entity appearing to be a potential beneficiary of this Bond, the Contractor shall promptly furnish a copy of this Bond or shall permit a copy to be made.
15. DEFINITIONS

    15.1 Claimant: An individual or entity having a direct contract with the Contractor or with a subcontractor of the Contractor to furnish labor, materials or equipment for use in the performance of the Contract. The intent of this Bond shall be to include without limitation in the terms "labor, materials, or equipment" that part of water, gas, power, light, heat, oil, gasoline, telephone service or rental equipment used in the Construction Contract, architectural and engineering services required for performance of the work of the Contractor and the Contractor's subcontractors, and all other items for which a mechanic's lien may be asserted in the jurisdiction where the labor, materials or equipment were furnished.

    15.2 Construction Contract: The agreement between the Owner and the Contractor identified on the signature page, including all Contract Documents and changes thereto.

    15.3 Owner Default: Failure of the Owner, which has neither been remedied nor waived, to pay the Contractor as required by the Construction Contract or to perform and complete or comply with the other terms thereof.

(FOR INFORMATION ONLY - NAME, ADDRESS AND TELEPHONE)
AGENT OR BROKER: OWNER'S REPRESENTATIVE (ARCHITECT, ENGINEER OR OTHER PARTY)

Certified Statement Pursuant to Neb. Rev. Stat. § 77-1323

§ 77-1323 *Every person, partnership, limited liability company, association, or corporation furnishing labor or material in the repair, alteration, improvement, erection, or construction of any public improvement shall furnish a certified statement to be attached to the contract that all equipment to be used on the project, except that acquired since the assessment date, has been assessed for taxation for the current year, giving the county where assessed.*

Pursuant to Neb. Rev. Stat. § 77-1323, I, _____, do hereby certify that all equipment to be used on City Project/Bid No. ____ , except that equipment acquired since the assessment date, has been assessed for taxation for the current year, in _____ County, Nebraska.

DATED this ____ day of _____, 2011.

By: _____

Title:_____

STATE OF NEBRASKA)
)ss.
COUNTY OF _____)

On _____, 2011, before me, the undersigned Notary Public duly commissioned for and qualified in said County, personally came _____, to me known to be the identical person, whose name is affixed to the foregoing instrument and acknowledged the execution thereof to be his voluntary act and deed.

Witness my hand and notarial seal the day and year last above written.

_____
Notary Public

(S E A L)

INSURANCE REQUIREMENTS
FOR ALL WEST HAYMARKET JOINT
PUBLIC AGENCY CONTRACTS

1. GENERAL PROVISIONS

A. **Approved Coverage Prior to Commencing Work/Subcontractors Included.** Contractor shall purchase and maintain in place insurance to protect Contractor and JPA against all liabilities and hazards as provided in these insurance requirements throughout the duration of the Contract. Contractor shall not commence work under this contract until the Contractor has obtained all insurance required under Section 2. below and such insurance has been approved by the City Attorney for JPA, nor shall the Contractor allow any subcontractor to commence work on any subcontract until all similar insurance required of the subcontractor has been so obtained and approved.

B. **Occurrence Basis Coverage.** All insurance shall be provided on an occurrence basis and not on a claims made basis, except for hazardous materials, errors and omissions, or other coverage not reasonably available on an occurrence basis; provided that all such claims made coverage is subject to the prior written approval of the City Attorney and must be clearly indicated as such in any certificate showing coverage.

C. **Authorized and Rated Insurers Required.** All insurance coverage are to be placed with insurers authorized to do business in the State of Nebraska and must be placed with an insurer that has an A.M. Best's Rating of no less than A:VII unless specific approval has been granted by the City Attorney.

D. **Certificates Showing Coverage**. Prior to commencing the Work, Contractor must furnish to JPA adequate written documentation including certificate(s) of insurance, which have the original signature of the authorized representative, declaration pages or other acceptable policy information evidencing the required coverage, endorsements, and amendments. The policy(ies) must contain a provision that obligates the insurance company(ies) issuing such policy(ies) to notify JPA in writing at least 30 days prior to any cancellation, non-renewal, except that only ten (10) days prior notice is required for cancellation due to nonpayment of premium. This cancellation provision must be indicated on the certificate of insurance. Upon request from JPA, a certified duplicate original of any required policy must be furnished. Certificate(s) should be sent to the following address:

West Haymarket Joint Public Agency
c/o City Attorney
City of Lincoln, Nebraska
555 South 10th Street
Lincoln, NE 68508

Certificates of insurance may utilize an appropriate standard ACORD Certificate of Insurance form showing the specific limits of insurance coverage required by this Article; provided that restrictions, qualifications or declarations inconsistent with the requirements of this Article shall not relieve the Contractor from providing insurance as required herein. Such certificates shall show JPA as additional insured except for applicable Worker's Compensation coverage, to include all work performed for JPA and specifically including, but not limited to, any liability caused or contributed to by the act, error, or omission of the Contractor, including any related subcontractors, third parties, agents, employees, officers or assigns of any of them. The inclusion of JPA as additional insured shall be for coverage only on a primary basis for liability coverage, and no coverage shall contain a policy or other restriction or attempt to provide restricted coverage for JPA, whether on an excess, contributory or other basis regardless of any other insurance coverage available to JPA, including by specific endorsement where necessary, as indicated in the following requirements.

E. **Terminology.** The terms "insurance," "insurance policy," or "coverage" as used in this article are used interchangeably and shall have the same meaning as "insurance" unless the context clearly requires otherwise. References to "ISO®" forms are merely for convenience and ease of reference, and an

equivalent or better form as determined acceptable by the City Attorney may be used. (Note: ISO® is a registered trademark of ISO Properties, Inc.)

F. **Other Requirements**. All policies (applying to coverage listed above) must not contain an exclusion for punitive damages and certificates of insurance must reflect that no exclusion exists.

Contractor agrees to waive its right of recovery against JPA for all claims and suits against JPA, except for claims and suits arising wholly out of the sole negligence, or to the extent caused by the gross negligence or willful misconduct, of JPA. In addition, its insurers, through the terms of the policy or policy endorsement, waive their right of subrogation against JPA for all claims and suits, except for claims and suits arising wholly out of the sole negligence, or to the extent caused by the gross negligence of willful misconduct, of JPA. The certificate of insurance must reflect the waiver of subrogation endorsement. Contractor further waives its right of recovery, and its insurers also waive their right of subrogation against JPA for loss of its owned or leased property or property under Contractor's care, custody or control, except for the right of recovery or right of subrogation arising wholly out of the sole negligence, or to the extent caused by the gross negligence or willful misconduct, of JPA.

Contractor is not allowed to self-insure without the prior written consent of JPA. If granted by JPA, any deductible, self-insured retention or other financial responsibility for claims must be covered directly by Contractor in lieu of insurance. Any and all JPA liabilities that would otherwise, in accordance with the provisions of this Agreement, be covered by Contractor's insurance will be covered as if Contractor elected not to include a deductible, self-insured retention or other financial responsibility for claims.

Upon notification to JPA of cancellation, non-removal, substitution or material alteration of any such policy(ies), JPA shall have the option to (i) if feasible, pay, on behalf of the Contractor, any and all such premiums, penalties, fees for expenses necessary to keep such policy(ies) in full force and effect; or (ii) in the event that such policy(ies) cannot be kept in full force and effect, enter into the open market to procure such policy(ies) of insurance on behalf of Contractor as required by this Agreement at the then current market rate. Upon any of the above occurrences, JPA shall invoice the Contractor for reimbursement of such premiums, penalties, fees, or expenses advanced on the JPA's behalf plus an additional fifteen percent (15%) of such advanced amounts as remuneration for JPA's overhead. Such amounts advanced by JPA shall be paid by the Contractor within thirty (30) days after delivery of a statement for such expense.

Contractor represents that this Agreement has been thoroughly reviewed by Contractor's insurance agent(s)/broker(s), who have been instructed by Contractor to procure the insurance coverage required by this Agreement. Allocated Loss Expense must be in addition to all policy limits for coverages referenced above.

Contractor represents and understands that its insurance agent(s)/broker(s) have been informed that the Contractor's insurance coverage being procured by the Contractor herein is to protect, defend, identify and hold harmless JPA from any and all liabilities, as such term is defined herein, that may arise in connection with this Agreement and the Contractor to the fullest extent allowed by law waives any caps or limitations on legal liability that may result therefrom.

If any portion of the operation is to be subcontracted by Contractor, Contractor must require that its subcontractors provide and maintain the insurance coverages set forth herein, naming JPA as an additional insured, and requiring that the subcontractors release, defend and indemnify JPA to the same extent and under the same terms and conditions as Contractor is required to release, defend and indemnify JPA herein.

Failure to provide evidence as required by Section 2. will entitle, but not require, JPA to immediately suspend work under this Agreement until such evidence is provided. Acceptance of a certificate that does not comply with this section will not operate as a waiver of Contractor's obligations hereunder.

The fact that insurance (including, without limitation, self-insurance) is obtained by Contractor will not be deemed to release or diminish the liability of Contractor including, without limitation, liability under the indemnity provisions of this Agreement. Damages recoverable by JPA will not be limited by the amount of the required insurance coverage.

2. INSURANCE REQUIREMENTS

A. **Scope of Required Coverage.** The Contractor shall take out and maintain during the life of Contract such insurance in the forms and minimum amounts as specified in this Section and as will protect Contractor and JPA from the following claims arising out of or resulting from or in connection with the Contractor's operations, undertakings or omissions directly or indirectly related to the Contract, whether by the Contractor or any Subcontractor or anyone directly or indirectly employed by any of them, or by anyone for whose acts any of them may be liable:

(1) Claims under workers' compensation, disability benefit, or other employee benefit acts;

(2) Claims arising out of bodily injury, occupational sickness or disease, or death of an employee or any other person;

(3) Claims customarily covered under personal injury liability coverage;

(4) Claims other than to the work itself arising out of an injury to or destruction of tangible property, including the loss of use resulting therefrom;

(5) Claims arising out of ownership, maintenance or use of any motor vehicle;

(6) Railroad protective liability coverage in the event the contract involves work to be performed within 50 feet of any railroad property and affecting any railroad bridge or trestle, tracks, road beds, tunnel, underpass or crossing.

B. **Worker's Compensation Insurance and Employer's Liability Insurance.** The Contractor shall provide applicable statutory Worker's Compensation Insurance with minimum limits as provided below covering all Contractor's employees, and in the case of any subcontracted work, the Contractor shall require the subcontractor similarly to provide Worker's Compensation Insurance for Subcontractor's employees. This policy shall contain the following endorsement or language: "Waiver of subrogation in favor of JPA."

The Contractor shall provide Employer's Liability Insurance with minimum limits as provided below placed with an insurance company authorized to write such insurance in all states where the Contractor will have employees located in the performance of this contract, and the Contractor shall require each Subcontractor similarly to maintain Employer's Liability Insurance on the Subcontractor's employees.

Coverage	**Listing**	**Min Amt**	**Notes**
Worker's Comp.			
	State	Statutory	
	Applicable Federal	Statutory	
Employer's Liability			
	Bodily Injury by accident	$500,000*	each accident
	Bodily Injury by disease	$500,000*	each employee
	Bodily Injury	$500,000*	policy limit
* $1,000,000.00 required for Amtrak Work (i.e. platform canopy and station)			

C. **Commercial General Liability Insurance.**

(1) The Contractor shall provide Commercial General Liability Insurance in a policy form providing broad form contractual liability no less comprehensive and no more restrictive coverage than provided under the ISO® form CG00010798 or newer with standard exclusions "a" through "o" and with minimum limits as provided below. Any other exclusions that operate to contradict or materially alter the standard exclusions shall be specifically listed on the certificate of insurance and shall be subject to the prior written approval of the City Attorney.

Coverage	**Min Amt**	**Notes**
General	$5,000,000	Aggregate
Products and Completed Operations	$10,000,000	Aggregate
Personal and Advertising Injury	$1,000,000	
Each Occurrence	$1,000,000	
Fire Damage Limit	$ 100,000	any one fire
Medical Damage Limit	$ 10,000	any one person

(2) The required Commercial General Liability Insurance shall also include coverage for the following:

- Bodily injury and property damage.
- Fire legal liability
- Coverage for all premises and operations.
- Personal and advertising injury.
- Operations by independent contractors.
- X.C.U. Coverage including coverage for demolition of any building or structure, collapse, explosion, blasting, excavation and damage to property below the surface of ground.
- Any fellow employee exclusions shall be deleted.
- Coverage shall not contain an absolute pollution exclusion, and applicable remaining coverage shall apply for pollution exposures arising from products and completed operations.
- Coverage for products and completed operations maintained for duration of work and shall be maintained for a minimum of three years after final acceptance under the Contract or the warranty period for the same whichever is longer, unless modified in any Special Provisions.
- Liability coverage which shall include contractually assumed defense costs in addition to any policy limits.

(3) This policy shall also include the following endorsements which shall be indicated on the Certificate of Insurance.

- The definition of insured contract shall be amended to remove any exclusion or other limitation for work being done within 50 feet of railroad property.
- Endorsement to provide the general aggregate per project endorsement.
- Endorsement to provide waiver of subrogation in favor of and acceptable to JPA.
- Endorsement to provide that the policy shall be primary and non-contributory with respect to any insurance carried by the JPA.
- Separation of insureds.
- Additional insured endorsement in favor of and acceptable to the JPA.

(4) If work is to be performed within 50 feet of any railroad property and affecting any railroad bridge or trestle, tracks, road beds, tunnel, underpass or crossing, Railroad Contractual Liability Endorsement (ISO® form CG24170196 or newer). The definition of insured contract shall be amended to remove any exclusion or other limitation for any work done within fifty (50) feet of railroad property.

D. **Vehicle liability insurance coverage.**

The Contractor shall provide reasonable insurance coverage for all owned, non-owned, hired and leased vehicles. This insurance shall contain a combined single limit of at least $1,000,000 per occurrence, and include coverage for, but not limited to the following:

- Bodily injury and property damage
- Any and all vehicles owned, used or hired

This policy shall also contain the following endorsements or language, which shall be indicated on the certificate of insurance:

- Waiver of subrogation in favor of and acceptable to JPA.
- Additional insured endorsement in favor or and acceptable to JPA.
- Separation of insureds.
- The policy shall be primary and non-contributing with respect to any insurance carried by JPA.
- Endorsements to include contractual liability coverage and delete any fellow employee exclusion.
- If specifically required in the Special Provisions, the required coverage shall also include an endorsement for auto cargo pollution (ISO® form CA 99 48).

E. **Railroad Protective Liability.** If work is to be performed within 50 feet of any railroad property and affecting any railroad bridge or trestle, tracks, road beds, tunnel, underpass or crossing or otherwise required by the Special Provisions or applicable requirements of an affected railroad, the Contractor shall provide Railroad Protective Liability Insurance naming the affected railroad/s as insured with minimum limits for bodily injury and property damage of $5,000,000 per occurrence, $10,000,000 aggregate, or such other limits as required in the Special Provisions or by the affected railroad. The original of the policy shall be furnished to the railroad and a certified copy of the same furnished to the City Attorney's office prior to any related construction or entry upon railroad premises by the Contractor or for work related to the Contract.

The policy shall be issued on a standard ISO form CG 00 35 10 93 and include the following endorsements:

- Endorsed to include the Pollution Exclusion Amendment (ISO form CG 28 31 10 93)
- Endorsed to include the Limited Seepage and Pollution Endorsement.
- Endorsed to remove any exclusion for punitive damages.

No other endorsements restricting coverage may be added. The original policy must be provided to Railroad prior to performing any work or services under this C&M Agreement

In lieu of providing a Railroad Protective Liability Policy, Contractor may participate in BNSF's Blanket Railroad Protective Liability Insurance Policy available to JPA and JPA Contractors.

3. CONTRACTOR'S INDEMNITY – CONTRACTUAL LIABILITY INSURANCE

A. To the same extent as specified for minimum coverage requirements in Section 2 above, the required insurance shall include contractual liability coverage to include indemnification and hold harmless agreements and provisions in the related Contract Documents, specifically including the following provision:

<u>INDEMNIFICATION OF JPA</u>.

TO THE FULLEST EXTENT PERMITTED BY LAW, CONTRACTOR SHALL RELEASE, INDEMNIFY, DEFEND AND HOLD HARMLESS JPA AND JPA'S MEMBERS, SUCCESSORS, ASSIGNS, LEGAL REPRESENTATIVES, OFFICERS, EMPLOYEES AND AGENTS FOR, FROM AND AGAINST ANY AND ALL CLAIMS, LIABILITIES, FINES, PENALTIES, COSTS, DAMAGES, LOSSES, LIENS, CAUSES OF ACTION, SUITS, DEMANDS, JUDGMENTS AND EXPENSES (INCLUDING, WITHOUT

LIMITATION, COURT COSTS AND ATTORNEYS' FEES) OF ANY NATURE, KIND OR DESCRIPTION OF ANY PERSON (INCLUDING, WITHOUT LIMITATION, THE EMPLOYEES OF THE PARTIES HERETO) OR ENTITY DIRECTLY OR INDIRECTLY (COLLECTIVELY, "LIABILITIES") ARISING OUT OF, RESULTING FROM OR CAUSALLY RELATED TO (IN WHOLE OR IN PART):

(i) ANY RIGHTS OR INTERESTS GRANTED TO CONTRACTOR PURSUANT TO THIS AGREEMENT;

(ii) THE USE, OCCUPANCY OR PRESENCE OF CONTRACTOR AND CONTRACTOR PARTIES (DEFINED BELOW) AND/OR ANY WORK PERFORMED BY CONTRACTOR AND CONTRACTOR'S CONTRACTOR PARTIES IN, ON, OR ABOUT BNSF'S PROPERTY OR RIGHT-OF-WAY AND/OR THE WORK AREA;

(iii) ANY ENVIRONMENTAL MATTERS ARISING FROM CONTRACTOR AND/OR CONTRACTOR PARTIES' USE AND OCCUPANCY OF BNSF'S RIGHT-OF- WAY OR OTHER BNSF PROPERTY, INCLUDING WITHOUT LIMITATION USE AND OCCUPANCY OF BNSF'S RIGHT-OF-WAY OR OTHER BNSF PROPERTY IN CONNECTION WITH PERFORMANCE OF THE WORK;

(iv) ANY DAMAGE TO OR DESTRUCTION OF ANY TELECOMMUNICATION LINES IN CONNECTION WITH THE WORK BY CONTRACTOR AND/OR CONTRACTOR PARTIES, INCLUDING BUT NOT LIMITED TO (A) ANY INJURY TO OR DEATH OF ANY PERSON EMPLOYED BY OR ON BEHALF OF ANY TELECOMMUNICATIONS COMPANY, AND/OR ITS CONTRACTORS, AGENTS AND/OR EMPLOYEES AS A RESULT OF SUCH DAMAGE OR DESTRUCTION, AND/OR (B) ANY CLAIM OR CAUSE OF ACTION FOR ALLEGED LOSS OF PROFITS OR REVENUE BY, OR LOSS OF SERVICE BY A CUSTOMER OR USER OF SUCH TELECOMMUNICATION COMPANY(IES) AS A RESULT OF SUCH DAMAGE OR DESTRUCTION;

(v) CONTRACTOR'S BREACH OF THE TERMS AND CONDITIONS OF THIS AGREEMENT; OR

(vi) ANY ACT OR OMISSION OF CONTRACTOR OR ITS OFFICERS, AGENTS, INVITEES, EMPLOYEES OR SUBCONTRACTORS (SUCH OFFICERS, AGENTS, INVITEES, EMPLOYEES AND SUBCONTRACTORS BEING REFERRED TO HEREIN INDIVIDUALLY AS A "CONTRACTOR PARTY" AND COLLECTIVELY, "CONTRACTOR PARTIES"), OR ANYONE DIRECTLY OR INDIRECTLY EMPLOYED BY ANY OF THEM, OR ANYONE THEY CONTROL OR EXERCISE CONTROL OVER.

THE LIABILITY ASSUMED BY CONTRACTOR WILL NOT BE AFFECTED BY THE FACT, IF IT IS A FACT, THAT ANY DAMAGE, DESTRUCTION, INJURY OR DEATH WAS OCCASIONED BY OR CONTRIBUTED TO BY THE NEGLIGENCE OF JPA, ITS AGENTS, SERVANTS, EMPLOYEES OR OTHERWISE, BUT EXCLUDING CLAIMS WHOLLY CAUSED BY JPA'S SOLE NEGLIGENCE AND EXCLUDING CLAIMS TO THE EXTENT THAT SUCH CLAIMS ARE CAUSED BY THE WILLFUL MISCONDUCT OR GROSS NEGLIGENCE OF JPA.

Such indemnification shall not be construed to negate, abridge, limit or otherwise reduce any other right or obligation of indemnity which would otherwise exist as to any party or person described in this section.

B. In any and all claims by any employee (whether an employee of the Contractor or subcontractor, or their respective agents or assigns by anyone directly or indirectly employed by any of them or anyone for whose acts any of them may be liable as an employer) in whole or in part against JPA, its officers, agents, employees, volunteers or consultants, the above indemnification shall not be limited in any way by the amount of damages, compensation, benefits or other contributions payable by or on behalf of a the employer under Worker's Compensation statutes, disability benefit acts, or any other employee benefit or payment acts as the case may be.

C. The obligations of indemnification herein shall not include or extend to:

(1) Any outside engineer's or architect's professional errors and omissions involving the approval or furnishing of maps, drawings, opinions, reports, surveys, change orders, designs or specifications within the scope of professional services provided to JPA and related to the Contract; and

(2) Any claims wholly caused by the JPA's sole negligence and excluding claims to the extent such claims are caused by the willful misconduct or gross negligence of the JPA.

D. In the event of any litigation of any such claims shall be commenced against JPA, Contractor shall defend the same at Contractor's sole expense upon notice thereof from JPA. Contractor shall notify the insuring company that JPA reserves and does not waive any statutory or governmental immunity and neither Contractor, nor Contractor's counsel whether employed by Contractor or by an insurer on behalf of the Contractor shall waive such defenses or enter into any settlement or other disposition requiring waiver of any defenses or immunity of JPA without the express written consent of the JPA.

4. CONTRACTOR'S INSURANCE FOR OTHER LOSSES.

A. Contractor shall assume full responsibility for all loss or damage from any cause whatsoever to any tools owned, rented or used in connection with the Contract including any tools, machinery, equipment, storage devices, containers, sheds, temporary structures, staging structures, scaffolding, fences, forms, braces, jigs, screens, brackets, vehicles and the like owned or rented by Contractor, or Contractor's agents, subcontractors, suppliers, or employees.

B. In connection with the above, Contractor shall cause or require any applicable insurance related to physical damage of the same to provide a waiver of a right of subrogation against JPA.

5. NOTIFICATION IN EVENT OF LIABILITY OR DAMAGE.

A. The Contractor shall promptly notify JPA in writing and provide a copy of all claims and information presented to any of Contractor's insurance carrier/s upon any loss or claim or upon any occurrence giving rise to any liability or potential liability related to the Contract or related work. The notice to JPA shall include pertinent details of the claim or liability and an estimate of damages, names of witnesses, and other pertinent information including the amount of the claim, if any.

B. In the event JPA receives a claim or otherwise has actual knowledge of any loss or claim arising out of the Contract or related work and not otherwise known to or made against the Contractor, JPA shall promptly notify the Contractor of the same in writing, including pertinent details of the claim or liability; Provided, however JPA shall have no duty to inspect the project to obtain such knowledge, and provided further that JPA's obligations, if any, shall not relieve the Contractor of any liability or obligation hereunder.

6. PROPERTY INSURANCE/ BUILDER'S RISK.

A. The Contractor shall provide property insurance (a/k/a Builder's Risk or installation Floater) on all Projects involving construction or installation of buildings or structures and other projects where provided in the Special Provisions. Such insurance shall be provided in the minimum amount of the total contract sum and in addition applicable modifications thereto for the entire work on a replacement cost basis. Such insurance shall be maintained until JPA completes final acceptance of the work as provided in the Contract. Such insurance shall be written and endorsed, where applicable, to include the interests of JPA, Contractor, Subcontractors, Sub-subcontractors in the related work. The maximum deductible for such insurance shall be $5,000 for each occurrence, which deductible shall be the responsibility of the Contractor. Such insurance shall contain a "permission to occupy" endorsement.

B. All related Property Insurance shall be provided on a “Special Perils” or similar policy form and shall at a minimum insure against perils of fire including extended coverage and physical loss or damage including without limitation or duplication of coverage: flood, earthquake, theft, vandalism, malicious mischief, collapse, and debris removal, including demolition whether occasioned by the loss or by enforcement of applicable legal or safety requirements including compensation or costs for JPA’s related costs and expenses (as owner) including labor required as a result of such loss.

C. All related Property Insurance shall include coverage for falsework, temporary buildings, work stored off-site or in-transit to the site, whether in whole or in part. Coverage for work off-site or in-transit shall be a minimum of 10% of the amount of the policy.

D. The Contractor’s Property Insurance shall be primary coverage for any insured loss related to or arising out of the Contract and shall not be reduced by or coordinated with separate property insurance maintained by JPA.

smart # 10070200
7-26-10/law/tb

CITY OF LINCOLN
EXECUTIVE ORDER

NO. 083319

WHEREAS, there is concern over the inappropriate competitive advantages in the public bidding process for local publicly funded construction and delivery service contracts resulting from the misclassification of individuals performing construction labor services as "independent contractors" rather than "employees"; such "independent contractors" are commonly referred to as "1099 workers" due to the IRS form they receive rather than a W-4 which an employee receives;

WHEREAS, this misclassification of such individuals as "independent contractors" rather than as "employees" eliminates any obligation to pay these individuals legally required minimum or overtime wages, to provide legally required workers' compensation insurance, to make unemployment insurance payments, to pay legally required employment and payroll taxes, and to provide any other health, pension, or benefit such individuals would typically receive if properly classified as employees;

WHEREAS, this misclassification of individuals performing construction labor services for the contractor as "independent contractors" rather than "employees" is a violation of federal and state law, but is difficult to enforce once public construction or delivery service contracts have been bid, awarded, and entered into;

WHEREAS, the use of public funds to compensate contractors who unlawfully avoid their obligation to pay legally required minimum or overtime wages, to provide legally required workers' compensation insurance, to make unemployment insurance payments, to pay legally required employment and payroll taxes, and to provide any other health, pension, or benefit is not in the public interest; and

WHEREAS, the Employee Classification Act, Neb. Rev. Stat. §§ 48-2901 to 48-2912 (effective July 15, 2010) provides that any contract entered into between a political subdivision and a contractor shall require that each contractor who performs construction or delivery service pursuant to the contract submit to the political subdivision an affidavit attesting that (1) each individual performing services for such contractor is properly classified under the Employee Classification Act, (2) such contractor has completed a federal I-9 immigration form and has such form on file for each employee performing services, (3) such contractor has complied with Neb. Rev. Stat. § 4-114 requirements that the contractor register and use a federal immigration employment verification system to determine the work eligibility status of new employees physically performing services in the State of Nebraska, (4) such contractor has no reasonable basis to believe that any individual performing services for such contractor is an undocumented worker, and (5) as of the time of the contract, such contractor is not barred from contracting with the state or any political subdivision pursuant to § 48-2912 of the Employee Classification Act.

NOW, THEREFORE, BY VIRTUE OF THE AUTHORITY VESTED IN ME by the Charter of the City of Lincoln, I hereby establish the following policy as to the bid and award of contracts to contractors for construction and delivery services with the City of Lincoln:

The Purchasing Agent shall immediately include in the City of Lincoln's notice to bidders for construction contracts that all contractors submitting bids in response to the notice shall affirmatively certify to the Purchasing Agent that all individuals hired to perform construction or delivery labor services for the contractor under the contract shall be properly classified as employees and not as independent contractors if the individual does not meet the requirements of an independent contractor under federal and state law (including the requirements of the State of Nebraska Employee Classification Act), and that the contractor will comply with all legal obligations with respect to these employees (including, but not limited to, minimum and overtime pay, workers' compensation, unemployment compensation, and payment of federal and state payroll taxes). The

notice to bidders shall further provide that contractors may use affidavits required pursuant to the Employee Classification Act for this purpose, but that a failure to make the affirmative certification to the Purchasing Agent shall render the bidder ineligible for award of the contract.

The Purchasing Agent shall immediately include the following provisions in contracts for construction or delivery services:

(1) Contractor agrees that each individual performing services for the contractor shall be properly classified as an employee and not as an independent contractor if the individual does not meet the requirements of an independent contractor under the State of Nebraska's Employee Classification Act and that contractor shall comply with all legal obligations with respect to the employee (including, but not limited to, minimum and overtime pay, workers' compensation, unemployment compensation, and payment of federal and state payroll taxes).

(2) Contractor understands and agrees that failure to classify each individual hired to perform services under the contract as an employee rather than as an independent contractor if the individual does not meet the requirements of an independent contractor under the State of Nebraska's Employee Classification Act and/or failure to comply with legal obligations with respect to the employee (including, but not limited to, minimum and overtime pay, workers' compensation, unemployment compensation, and payment of federal and state payroll taxes) shall be considered a breach of the contract and is a grounds for rescission of the contract by the City.

(3) Contractor additionally agrees to include the following provisions in each subcontract entered into with a subcontractor as part of the contractor's contract with the City:

(a) Subcontractor agrees that each individual performing services for the subcontractor shall be properly classified as an employee and not as an independent contractor if the individual does not meet the requirements of an independent contractor under the State of Nebraska's Employee Classification Act and that subcontractor shall comply with all legal obligations with respect to the employee (including, but not limited to, minimum and overtime pay,

workers' compensation, unemployment compensation, and payment of federal and state payroll taxes).

(b) Subcontractor understands and agrees that subcontractor's failure to properly classify individuals hired to perform services under the subcontract as employees and not as independent contractors if the individual does not meet the requirements of an independent contractor under the State of Nebraska's Employee Classification Act and/or failure to comply with legal obligations with respect to the employee (including, but not limited to, minimum and overtime pay, workers' compensation, unemployment compensation, and payment of federal and state payroll taxes) shall be considered a breach of the contract and is a grounds for rescission of the subcontract by the contractor.

(4) Contractor agrees that if subcontractor fails to or is suspected of failing to properly classify each individual hired pursuant to the subcontract as an employee and not as an independent contractor if the individual does not meet the requirements of an independent contractor under the State of Nebraska's Employee Classification Act and/or fails to comply with legal obligations with respect to the subcontractor's employee, the contractor shall take appropriate corrective action including, but not limited to, reporting the suspected violation of the State of Nebraska Employee Classification Act to the Nebraska Department of Labor or rescission of the subcontract by the contractor. Written notification of the corrective action shall be submitted to the City of Lincoln Purchasing Department. Contractor understands and agrees that contractor's failure to take appropriate corrective action shall be considered a breach of the contractor's contract with the City of Lincoln and is a grounds for rescission of the contract by the City.

(5) The City of Lincoln shall notify the Nebraska Department of Labor of any contractor or subcontractor it has determined is in breach of contract due to the terms of this order.

(6) Any contractor or subcontractor who shall have been determined by the Nebraska Department of Labor to have knowingly provided a false affidavit to the City of Lincoln

under the State of Nebraska's Employee Classification Act shall be referred to the Purchasing Agent of the City who shall determine whether to declare such contractor or subcontractor an irresponsible bidder who shall be disqualified from receiving any business from the municipality for a stated period of time, in accordance with Lincoln Municipal Code § 2.18.030(n)(1) or (2).

(7) This policy does not prohibit a contractor or subcontractor from hiring individuals to perform construction labor services as independent contractors, provided that the contractor's or subcontractor's use of such individuals as an independent contractor complies with the criteria found in subdivision 5 of Neb. Rev. Stat. § 48-604 and is otherwise valid under federal and state law and is not intended to circumvent lawful obligations under federal and state law or city contractual requirements.

The City Clerk is directed to send a copy of this Executive Order to Vince Mejer, City Purchasing Agent, for his record.

Dated this 28 day of July, 2010.

Chris Beutler, Mayor of Lincoln

Approved as to Form & Legality:

City Attorney

Exhibit D

EMPLOYEE CLASSIFICATION ACT AFFIDAVIT

For the purposes of complying with THE NEBRASKA EMPLOYEE CLASSIFICATION ACT, I, _____, herein below known as the Contractor, state under oath and swear as follows:

1. Each individual performing services for the Contractor is properly classified under the Employee Classification Act.

2.The Contractor has completed a federal I-9 immigration form and has such form on file for each employee performing services.

3. The Contractor has complied with Neb Rev Stat 4-114.

4. The Contractor has no reasonable basis to believe that any individual performing services for the Contractor is an undocumented worker.

5. The Contractor is not barred from contracting with the state or any political subdivision pursuant to section 12 of this Act.

6. As the Contractor I understand that pursuant to the Employee Classification Act a violation of the Act by a contractor is grounds for rescission of the contract by the City. I understand that pursuant to the Act any contractor who knowingly provides a false affidavit may be subject to criminal penalties and upon a second or subsequent violation shall be barred from contracting with the City for a period of three years after the date of discovery of the falsehood.

I hereby affirm and swear that the statements and information provided on this affidavit are true, complete and accurate. The undersigned person does hereby agree and represent that he or she is legally capable to sign this affidavit and to lawfully bind the Contractor to this affidavit.

PRINT NAME: _____
(First, Middle, Last)

SIGNATURE: _____

TITLE: _____

State of Nebraska)
) ss.
County of _____)

This affidavit was signed and sworn to before me, the undersigned Notary Public, on this ____ day of _____, 20__.

_____
Notary Public

Exhibit D

RECEIVED
OCT 31 2011
LAW DEPT.

Jamie Stamper
Manager-Risk Management

BNSF Railway Company
P.O. Box 961073
Fort Worth, Texas 61
2500 Lou Menk Drive
Fort Worth, Texas 76131-2828
Telephone 817-352-3485
Fax 817-352-7207
Email Address
Jamie.Stamper@bnsf.com

October 21, 2011

WEST HAYMARKET JOINT AGENCY (JPA),

BNSF Railway Company (BNSF) is pleased to advise that we are modifying our insurance certification process. This new process will ***improve your ease of doing business with BNSF*** and increase the efficiency of insurance certification. We have partnered with CertFocus, an industry leader in the automation of certificate of insurance review and validation. Once a certificate is received, BNSF's Risk Management Department will work directly with customers, contractors, and vendors to resolve any variances between submitted certificates and contractual requirements.

The new process will begin November 1, 2011. To minimize the impact to entities submitting certificates of insurance, we will be transitioning as follows:

- **New agreements** processed on or after November 1, 2011, please e-mail your current certificate(s) of insurance to BNSF@certfocus.com.
- **Existing agreements** with BNSF requiring insurance which renews on or after November 1, 2011, please e-mail renewal certificate(s) of insurance to BNSF@certfocus.com. Any insurance renewal prior to November 1, 2011 should be directed to BNSF@Ebix.com until December 31, 2011.
- **Effective January 1, 2012 all certificates of insurance should be e-mailed to BNSF@certfocus.com.**
- For all certificates of insurance submitted on or after November 1, 2011, we also ask that you update the address in the certificate holder box to read as follows:

  BNSF Railway Company
  PO Box 140528
  Kansas City, MO 64114

Thank you for your patience and understanding as we transition to our new process; we apologize in advance for any confusion or angst this transition may cause in the short term, but we also would remind you that the new process will improve your experience with BNSF as respects to insurance certification.

If you have any questions or would like further information on our new process, please contact Jamie Stamper, Manager – Risk Management at (817) 352-3485 or Jamie.Stamper@bnsf.com or Vickie Barnett, Assistant Manager – Risk Management at (817) 352-2414 or Vickie.Barnett@bnsf.com

Sincerely,

Jamie Stamper
Vickie Barnett

Exhibit D

29 C.F.R. § 5.5

Code of Federal Regulations Currentness
Title 29. Labor
Subtitle A. Office of the Secretary of Labor
Part 5. Labor Standards Provisions Applicable to Contracts Covering Federally Financed and Assisted Construction (Also Labor Standards Provisions Applicable to Nonconstruction Contracts Subject to the Contract Work Hours and Safety Standards Act)
Subpart A. Davis-Bacon and Related Acts Provisions and Procedures
§ 5.5 Contract provisions and related matters.

(a) The Agency head shall cause or require the contracting officer to insert in full in any contract in excess of $2,000 which is entered into for the actual construction, alteration and/or repair, including painting and decorating, of a public building or public work, or building or work financed in whole or in part from Federal funds or in accordance with guarantees of a Federal agency or financed from funds obtained by pledge of any contract of a Federal agency to make a loan, grant or annual contribution (except where a different meaning is expressly indicated), and which is subject to the labor standards provisions of any of the acts listed in § 5.1, the following clauses (or any modifications thereof to meet the particular needs of the agency, *Provided*, That such modifications are first approved by the Department of Labor):

(1) Minimum wages.

(i) All laborers and mechanics employed or working upon the site of the work (or under the United States Housing Act of 1937 or under the Housing Act of 1949 in the construction or development of the project), will be paid unconditionally and not less often than once a week, and without subsequent deduction or rebate on any account (except such payroll deductions as are permitted by regulations issued by the Secretary of Labor under the Copeland Act (29 CFR part 3)), the full amount of wages and bona fide fringe benefits (or cash equivalents thereof) due at time of payment computed at rates not less than those contained in the wage determination of the Secretary of Labor which is attached hereto and made a part hereof, regardless of any contractual relationship which may be alleged to exist between the contractor and such laborers and mechanics.

Contributions made or costs reasonably anticipated for bona fide fringe benefits under section 1 (b)(2) of the Davis-Bacon Act on behalf of laborers or mechanics are considered wages paid to such laborers or mechanics, subject to the provisions of paragraph (a)(1)(iv) of this section; also, regular contributions made or costs incurred for more than a weekly period (but not less often than quarterly) under plans, funds, or programs which cover the particular weekly period, are deemed to be constructively made or incurred during such weekly period. Such laborers and mechanics shall be paid the appropriate wage rate and fringe benefits on the wage determination for the classification of work actually performed, without regard to skill, except as provided in § 5.5(a)(4). Laborers or mechanics performing work in more than one classification may be compensated at the rate specified for each classification for the time actually worked therein: *Provided*, That the employer's payroll records accurately set forth the time spent in each classification in which work is performed. The wage determination (including any additional classification and wage rates conformed under paragraph (a)(1)(ii) of this section) and the Davis-Bacon poster (WH-1321) shall be posted at all times by the contractor and its subcontractors at the site of the work in a prominent and accessible place where it can be easily seen by the workers.

(ii)(A) The contracting officer shall require that any class of laborers or mechanics, including helpers, which is not listed in the wage determination and which is to be employed under the contract shall be classified in conformance with the wage determination. The contracting officer shall approve an additional classification and wage rate and fringe benefits therefore only when

Exhibit D

the following criteria have been met:

(1) The work to be performed by the classification requested is not performed by a classification in the wage determination; and

(2) The classification is utilized in the area by the construction industry; and

(3) The proposed wage rate, including any bona fide fringe benefits, bears a reasonable relationship to the wage rates contained in the wage determination.

(B) If the contractor and the laborers and mechanics to be employed in the classification (if known), or their representatives, and the contracting officer agree on the classification and wage rate (including the amount designated for fringe benefits where appropriate), a report of the action taken shall be sent by the contracting officer to the Administrator of the Wage and Hour Division, Employment Standards Administration, U.S. Department of Labor, Washington, DC 20210. The Administrator, or an authorized representative, will approve, modify, or disapprove every additional classification action within 30 days of receipt and so advise the contracting officer or will notify the contracting officer within the 30-day period that additional time is necessary.

(C) In the event the contractor, the laborers or mechanics to be employed in the classification or their representatives, and the contracting officer do not agree on the proposed classification and wage rate (including the amount designated for fringe benefits, where appropriate), the contracting officer shall refer the questions, including the views of all interested parties and the recommendation of the contracting officer, to the Administrator for determination. The Administrator, or an authorized representative, will issue a determination within 30 days of receipt and so advise the contracting officer or will notify the contracting officer within the 30-day period that additional time is necessary.

(D) The wage rate (including fringe benefits where appropriate) determined pursuant to paragraphs (a)(1)(ii)(B) or (C) of this section, shall be paid to all workers performing work in the classification under this contract from the first day on which work is performed in the classification.

(iii) Whenever the minimum wage rate prescribed in the contract for a class of laborers or mechanics includes a fringe benefit which is not expressed as an hourly rate, the contractor shall either pay the benefit as stated in the wage determination or shall pay another bona fide fringe benefit or an hourly cash equivalent thereof.

(iv) If the contractor does not make payments to a trustee or other third person, the contractor may consider as part of the wages of any laborer or mechanic the amount of any costs reasonably anticipated in providing bona fide fringe benefits under a plan or program, *Provided*, That the Secretary of Labor has found, upon the written request of the contractor, that the applicable standards of the Davis-Bacon Act have been met. The Secretary of Labor may require the contractor to set aside in a separate account assets for the meeting of obligations under the plan or program.

(2) Withholding. The (write in name of Federal Agency or the loan or grant recipient) shall upon its own action or upon written request of an authorized representative of the Department of Labor withhold or cause to be withheld from the contractor under this contract or any other Federal contract with the same prime contractor, or any other federally-assisted contract subject to Davis-Bacon prevailing wage requirements, which is held by the same prime contractor, so much of the accrued payments or advances as may be considered necessary to pay laborers and mechanics, including apprentices, trainees, and helpers, employed by the contractor or any subcontractor the full amount of wages required by the contract. In the event of failure to pay any laborer or mechanic, including any apprentice, trainee, or helper, employed or working on the site of the work (or under the United States Housing Act of 1937 or under the Housing Act of 1949 in the construction or development of the project), all or part of the wages required by the contract,

Exhibit D

the (Agency) may, after written notice to the contractor, sponsor, applicant, or owner, take such action as may be necessary to cause the suspension of any further payment, advance, or guarantee of funds until such violations have ceased.

(3) Payrolls and basic records.

(i) Payrolls and basic records relating thereto shall be maintained by the contractor during the course of the work and preserved for a period of three years thereafter for all laborers and mechanics working at the site of the work (or under the United States Housing Act of 1937, or under the Housing Act of 1949, in the construction or development of the project). Such records shall contain the name, address, and social security number of each such worker, his or her correct classification, hourly rates of wages paid (including rates of contributions or costs anticipated for bona fide fringe benefits or cash equivalents thereof of the types described in section 1(b)(2)(B) of the Davis-Bacon Act), daily and weekly number of hours worked, deductions made and actual wages paid. Whenever the Secretary of Labor has found under 29 CFR 5.5(a)(1)(iv) that the wages of any laborer or mechanic include the amount of any costs reasonably anticipated in providing benefits under a plan or program described in section 1(b)(2)(B) of the Davis-Bacon Act, the contractor shall maintain records which show that the commitment to provide such benefits is enforceable, that the plan or program is financially responsible, and that the plan or program has been communicated in writing to the laborers or mechanics affected, and records which show the costs anticipated or the actual cost incurred in providing such benefits. Contractors employing apprentices or trainees under approved programs shall maintain written evidence of the registration of apprenticeship programs and certification of trainee programs, the registration of the apprentices and trainees, and the ratios and wage rates prescribed in the applicable programs.

(ii)(A) The contractor shall submit weekly for each week in which any contract work is performed a copy of all payrolls to the (write in name of appropriate federal agency) if the agency is a party to the contract, but if the agency is not such a party, the contractor will submit the payrolls to the applicant, sponsor, or owner, as the case may be, for transmission to the (write in name of agency). The payrolls submitted shall set out accurately and completely all of the information required to be maintained under 29 CFR 5.5(a)(3)(i), except that full social security numbers and home addresses shall not be included on weekly transmittals. Instead the payrolls shall only need to include an individually identifying number for each employee (e.g., the last four digits of the employee's social security number). The required weekly payroll information may be submitted in any form desired. Optional Form WH-347 is available for this purpose from the Wage and Hour Division Web site at http://www.dol.gov/esa/whd/forms/wh347instr.htm or its successor site. The prime contractor is responsible for the submission of copies of payrolls by all subcontractors. Contractors and subcontractors shall maintain the full social security number and current address of each covered worker, and shall provide them upon request to the (write in name of appropriate federal agency) if the agency is a party to the contract, but if the agency is not such a party, the contractor will submit them to the applicant, sponsor, or owner, as the case may be, for transmission to the (write in name of agency), the contractor, or the Wage and Hour Division of the Department of Labor for purposes of an investigation or audit of compliance with prevailing wage requirements. It is not a violation of this section for a prime contractor to require a subcontractor to provide addresses and social security numbers to the prime contractor for its own records, without weekly submission to the sponsoring government agency (or the applicant, sponsor, or owner).

(B) Each payroll submitted shall be accompanied by a "Statement of Compliance," signed by the contractor or subcontractor or his or her agent who pays or supervises the payment of the persons employed under the contract and shall certify the following:

(1) That the payroll for the payroll period contains the information required to be provided under § 5.5 (a)(3)(ii) of Regulations, 29 CFR part 5, the appropriate information is being maintained under § 5.5 (a)(3)(i) of Regulations, 29 CFR part 5, and that such information is correct and complete;

Exhibit D

(2) That each laborer or mechanic (including each helper, apprentice, and trainee) employed on the contract during the payroll period has been paid the full weekly wages earned, without rebate, either directly or indirectly, and that no deductions have been made either directly or indirectly from the full wages earned, other than permissible deductions as set forth in Regulations, 29 CFR part 3;

(3) That each laborer or mechanic has been paid not less than the applicable wage rates and fringe benefits or cash equivalents for the classification of work performed, as specified in the applicable wage determination incorporated into the contract.

(C) The weekly submission of a properly executed certification set forth on the reverse side of Optional Form WH-347 shall satisfy the requirement for submission of the "Statement of Compliance" required by paragraph (a)(3)(ii)(B) of this section.

(D) The falsification of any of the above certifications may subject the contractor or subcontractor to civil or criminal prosecution under section 1001 of title 18 and section 231 of title 31 of the United States Code.

(iii) The contractor or subcontractor shall make the records required under paragraph (a)(3)(i) of this section available for inspection, copying, or transcription by authorized representatives of the (write the name of the agency) or the Department of Labor, and shall permit such representatives to interview employees during working hours on the job. If the contractor or subcontractor fails to submit the required records or to make them available, the Federal agency may, after written notice to the contractor, sponsor, applicant, or owner, take such action as may be necessary to cause the suspension of any further payment, advance, or guarantee of funds. Furthermore, failure to submit the required records upon request or to make such records available may be grounds for debarment action pursuant to 29 CFR 5.12.

(4) Apprentices and trainees--

(i) Apprentices. Apprentices will be permitted to work at less than the predetermined rate for the work they performed when they are employed pursuant to and individually registered in a bona fide apprenticeship program registered with the U.S. Department of Labor, Employment and Training Administration, Office of Apprenticeship Training, Employer and Labor Services, or with a State Apprenticeship Agency recognized by the Office, or if a person is employed in his or her first 90 days of probationary employment as an apprentice in such an apprenticeship program, who is not individually registered in the program, but who has been certified by the Office of Apprenticeship Training, Employer and Labor Services or a State Apprenticeship Agency (where appropriate) to be eligible for probationary employment as an apprentice. The allowable ratio of apprentices to journeymen on the job site in any craft classification shall not be greater than the ratio permitted to the contractor as to the entire work force under the registered program. Any worker listed on a payroll at an apprentice wage rate, who is not registered or otherwise employed as stated above, shall be paid not less than the applicable wage rate on the wage determination for the classification of work actually performed. In addition, any apprentice performing work on the job site in excess of the ratio permitted under the registered program shall be paid not less than the applicable wage rate on the wage determination for the work actually performed. Where a contractor is performing construction on a project in a locality other than that in which its program is registered, the ratios and wage rates (expressed in percentages of the journeyman's hourly rate) specified in the contractor's or subcontractor's registered program shall be observed. Every apprentice must be paid at not less than the rate specified in the registered program for the apprentice's level of progress, expressed as a percentage of the journeymen hourly rate specified in the applicable wage determination. Apprentices shall be paid fringe benefits in accordance with the provisions of the apprenticeship program. If the apprenticeship program does not specify fringe benefits, apprentices must be paid the full amount of fringe benefits listed on the wage determination for the applicable classification. If the Administrator determines that a different practice prevails for the applicable apprentice classification, fringes shall be paid in accordance with that determination. In the event the Office of Apprenticeship Training, Employer and Labor Services, or a State Apprenticeship Agency

Exhibit D

recognized by the Office, withdraws approval of an apprenticeship program, the contractor will no longer be permitted to utilize apprentices at less than the applicable predetermined rate for the work performed until an acceptable program is approved.

(ii) Trainees. Except as provided in 29 CFR 5.16, trainees will not be permitted to work at less than the predetermined rate for the work performed unless they are employed pursuant to and individually registered in a program which has received prior approval, evidenced by formal certification by the U.S. Department of Labor, Employment and Training Administration. The ratio of trainees to journeymen on the job site shall not be greater than permitted under the plan approved by the Employment and Training Administration. Every trainee must be paid at not less than the rate specified in the approved program for the trainee's level of progress, expressed as a percentage of the journeyman hourly rate specified in the applicable wage determination. Trainees shall be paid fringe benefits in accordance with the provisions of the trainee program. If the trainee program does not mention fringe benefits, trainees shall be paid the full amount of fringe benefits listed on the wage determination unless the Administrator of the Wage and Hour Division determines that there is an apprenticeship program associated with the corresponding journeyman wage rate on the wage determination which provides for less than full fringe benefits for apprentices. Any employee listed on the payroll at a trainee rate who is not registered and participating in a training plan approved by the Employment and Training Administration shall be paid not less than the applicable wage rate on the wage determination for the classification of work actually performed. In addition, any trainee performing work on the job site in excess of the ratio permitted under the registered program shall be paid not less than the applicable wage rate on the wage determination for the work actually performed. In the event the Employment and Training Administration withdraws approval of a training program, the contractor will no longer be permitted to utilize trainees at less than the applicable predetermined rate for the work performed until an acceptable program is approved.

(iii) Equal employment opportunity. The utilization of apprentices, trainees and journeymen under this part shall be in conformity with the equal employment opportunity requirements of Executive Order 11246, as amended, and 29 CFR part 30.

(5) Compliance with Copeland Act requirements. The contractor shall comply with the requirements of 29 CFR part 3, which are incorporated by reference in this contract.

(6) Subcontracts. The contractor or subcontractor shall insert in any subcontracts the clauses contained in 29 CFR 5.5(a)(1) through (10) and such other clauses as the (write in the name of the Federal agency) may by appropriate instructions require, and also a clause requiring the subcontractors to include these clauses in any lower tier subcontracts. The prime contractor shall be responsible for the compliance by any subcontractor or lower tier subcontractor with all the contract clauses in 29 CFR 5.5.

(7) Contract termination: debarment. A breach of the contract clauses in 29 CFR 5.5 may be grounds for termination of the contract, and for debarment as a contractor and a subcontractor as provided in 29 CFR 5.12.

(8) Compliance with Davis-Bacon and Related Act requirements. All rulings and interpretations of the Davis-Bacon and Related Acts contained in 29 CFR parts 1, 3, and 5 are herein incorporated by reference in this contract.

(9) Disputes concerning labor standards. Disputes arising out of the labor standards provisions of this contract shall not be subject to the general disputes clause of this contract. Such disputes shall be resolved in accordance with the procedures of the Department of Labor set forth in 29 CFR parts 5, 6, and 7. Disputes within the meaning of this clause include disputes between the contractor (or any of its subcontractors) and the contracting agency, the U.S. Department of Labor, or the employees or their representatives.

(10) Certification of eligibility.

(i) By entering into this contract, the contractor certifies that neither it (nor he or she) nor any person or firm who has an interest in the contractor's firm is a person or firm ineligible to be awarded Government contracts by virtue of section 3(a) of the Davis-Bacon Act or 29 CFR 5.12 (a)(1).

(ii) No part of this contract shall be subcontracted to any person or firm ineligible for award of a Government contract by virtue of section 3(a) of the Davis-Bacon Act or 29 CFR 5.12(a)(1).

(iii) The penalty for making false statements is prescribed in the U.S. Criminal Code, 18 U.S.C. 1001.

(b) Contract Work Hours and Safety Standards Act. The Agency Head shall cause or require the contracting officer to insert the following clauses set forth in paragraphs (b)(1), (2), (3), and (4) of this section in full in any contract in an amount in excess of $100,000 and subject to the overtime provisions of the Contract Work Hours and Safety Standards Act. These clauses shall be inserted in addition to the clauses required by § 5.5(a) or 4.6 of part 4 of this title. As used in this paragraph, the terms laborers and mechanics include watchmen and guards.

(1) Overtime requirements. No contractor or subcontractor contracting for any part of the contract work which may require or involve the employment of laborers or mechanics shall require or permit any such laborer or mechanic in any workweek in which he or she is employed on such work to work in excess of forty hours in such workweek unless such laborer or mechanic receives compensation at a rate not less than one and one-half times the basic rate of pay for all hours worked in excess of forty hours in such workweek.

(2) Violation; liability for unpaid wages; liquidated damages. In the event of any violation of the clause set forth in paragraph (b)(1) of this section the contractor and any subcontractor responsible therefor shall be liable for the unpaid wages. In addition, such contractor and subcontractor shall be liable to the United States (in the case of work done under contract for the District of Columbia or a territory, to such District or to such territory), for liquidated damages. Such liquidated damages shall be computed with respect to each individual laborer or mechanic, including watchmen and guards, employed in violation of the clause set forth in paragraph (b)(1) of this section, in the sum of $10 for each calendar day on which such individual was required or permitted to work in excess of the standard workweek of forty hours without payment of the overtime wages required by the clause set forth in paragraph (b)(1) of this section.

(3) Withholding for unpaid wages and liquidated damages. The (write in the name of the Federal agency or the loan or grant recipient) shall upon its own action or upon written request of an authorized representative of the Department of Labor withhold or cause to be withheld, from any moneys payable on account of work performed by the contractor or subcontractor under any such contract or any other Federal contract with the same prime contractor, or any other federally-assisted contract subject to the Contract Work Hours and Safety Standards Act, which is held by the same prime contractor, such sums as may be determined to be necessary to satisfy any liabilities of such contractor or subcontractor for unpaid wages and liquidated damages as provided in the clause set forth in paragraph (b)(2) of this section.

(4) Subcontracts. The contractor or subcontractor shall insert in any subcontracts the clauses set forth in paragraph (b)(1) through (4) of this section and also a clause requiring the subcontractors to include these clauses in any lower tier subcontracts. The prime contractor shall be responsible for compliance by any subcontractor or lower tier subcontractor with the clauses set forth in paragraphs (b)(1) through (4) of this section.

(c) In addition to the clauses contained in paragraph (b), in any contract subject only to the Contract Work Hours and Safety Standards Act and not to any of the other statutes cited in § 5.1, the Agency Head shall cause or require the contracting officer to insert a clause requiring that the contractor or subcontractor shall maintain payrolls and basic payroll records during the course of the work and shall preserve them for a period of three years from the completion of the contract for all laborers and mechanics, including guards and watchmen, working on the contract. Such records shall contain the

name and address of each such employee, social security number, correct classifications, hourly rates of wages paid, daily and weekly number of hours worked, deductions made, and actual wages paid. Further, the Agency Head shall cause or require the contracting officer to insert in any such contract a clause providing that the records to be maintained under this paragraph shall be made available by the contractor or subcontractor for inspection, copying, or transcription by authorized representatives of the (write the name of agency) and the Department of Labor, and the contractor or subcontractor will permit such representatives to interview employees during working hours on the job.

(The information collection, recordkeeping, and reporting requirements contained in the following paragraphs of this section were approved by the Office of Management and Budget:

Paragraph	OMB Control Number
(a)(1)(ii)(B)	1215-01
(a)(1)(ii)(C)	1215-01
(a)(1)(iv)	1215-01
(a)(3)(i)	1215-0140, 1215-00
(a)(3)(ii)(A)	1215-01
(c)	1215-0140, 1215-00

[29 FR 100, Jan. 4, 1964, as amended at 29 FR 13463, Sept. 30, 1964; 30 FR 13136, Oct. 15, 1965; 36 FR 19304, Oct. 2, 1971; 40 FR 30481, July 21, 1975; 41 FR 10063, March 9, 1976; 47 FR 145, Jan. 5, 1982; 51 FR 12265, April 9, 1986; 54 FR 4243, Jan. 27, 1989; 55 FR 50150, Dec. 4, 1990; 57 FR 28776, June 26, 1992; 58 FR 58955, Nov. 5, 1993; 61 FR 40716, Aug. 5, 1996; 61 FR 68641, Dec. 30, 1996; 65 FR 69693, Nov. 20, 2000; 73 FR 77511, Dec. 19, 2008; 74 FR 2862, Jan. 16, 2009]

SOURCE: 48 FR 19541, April 29, 1983; 51 FR 12265, April 9, 1986; 61 FR 40716, Aug. 5, 1996; 65 FR 80278, Dec. 20, 2000; 73 FR 77511, Dec. 19, 2008, unless otherwise noted.

AUTHORITY: 5 U.S.C. 301; R.S. 161, 64 Stat. 1267; Reorganization Plan No. 14 of 1950, 5 U.S.C. appendix; 40 U.S.C. 3141 et seq.; 40 U.S.C. 3145; 40 U.S.C. 3148; 40 U.S.C. 3701 et seq.; and the laws listed in 5.1(a) of this part; Secretary's Order 01-2008; and Employment Standards Order No. 2001-01.; 40 U.S.C. 276a-276a-7; 40 U.S.C. 276c; 40 U.S.C. 327-332; Reorganization Plan No. 14 of 1950, 5 U.S.C. Appendix; 5 U.S.C. 301; and the statutes listed in section 5.1(a) of this part.

NOTES OF DECISIONS

29 C. F. R. § 5.5, 29 CFR § 5.5

Current through December 15, 2011; 76 FR 77913.

© 2011 Thomson Reuters

END OF DOCUMENT

(c) 2011 Thomson Reuters. No Claim to Orig. US Gov. Works.

Exhibit D

WH 12-6 Introduce: 1-6-12

RESOLUTION NO. WH- _____

BE IT RESOLVED by the Board of Representatives of the West Haymarket Joint Public Agency:

That the attached Amendment No. 5 to the Agreement for Environmental Remediation Consulting Services between Alfred Benesch & Company and the West Haymarket Joint Public Agency to include expanded scope of consulting services to include Amendment No. 5 to Scope of Services for an additional amount of $443,228.71 is hereby approved and the Chairperson of the West Haymarket Joint Public Agency Board of Representatives is hereby authorized to execute said Amendment No. 5 on behalf of the JPA.

The City Clerk is directed to return a fully executed original of Amendment No. 5 to Alfred Benesch & Company, Attn: Gary Proskovec, 825 J Street, Lincoln, NE 68508.

Adopted this _____ day of January, 2012.

Introduced by:

_____

Approved as to Form & Legality:

_____
Legal Counsel for
West Haymarket Joint Public Agency

West Haymarket Joint Public Agency
Board of Representatives

_____
Tim Clare

_____
Chris Beutler

_____
Eugene Carroll

AMENDMENT NO. 5

to the AGREEMENT for

ENVIRONMENTAL REMEDIATION CONSULTING SERVICES

between ALFRED BENESCH & COMPANY

and the

WEST HAYMARKET JOINT PUBLIC AGENCY

WEST HAYMARKET ENVIRONMENTAL REMEDIATION PROJECT

Specification No. 10-083

This Contract Amendment is made by and between Alfred Benesch & Company (Consultant), and the West Haymarket Joint Public Agency, hereinafter called JPA, this _____ day of _____ 2012 and approved by Resolution No. _____.

WHEREAS, it is the mutual desire of the parties hereto to amend the Agreement to provide professional services associated with the West Haymarket Environmental Remediation Contract which was entered into with the City of Lincoln on July 15, 2010 by Executive Order No. 083296 to provide environmental remediation consulting services. Such agreement was approved by the JPA under Resolution *WH-JPA Resolution for Assignment and Assumption Agreements* on July 22, 2010.

The general description of work covered by this Amendment shall include extending the contract performance period through June 30, 2013; supplementing Task 1 (Project management) and Task 4 (VCP Application and Work Plan) to include environmental remediation consulting services for areas south of the "O" St. Viaduct to be included in the NDEQ VCP; supplementing Task 6 (Environmental Contingency Plan) for reimbursement of Consultant for payment to Clean Harbors Environmental Services Inc., (Clean Harbors) for payment of disposal fees for creosote – impacted debris discovered during Arena site preparation activities; supplementing Task 8 (Title 200 Investigation) to include continued groundwater investigation and monitoring required by NDEQ, and new Task 21 – "BNSF Transition Property PCB Remediation Oversight and Reporting" for oversight and regulatory closure reporting of PCB cleanup operations of the BNSF Transition (Alter "Sliver") property.

A detailed breakdown of the scope and fee for this amendment is included in the attached "**Amendment No. 5 to Scope of Services.**"

The total estimated fee for completion of the work associated with this Amendment is **$443,228.71**, which increases the total not-to-exceed contract amount from **$1,090,191.00 to $1,533,419.71.**

NOW THEREFORE, it is hereby agreed that the existing Agreement be amended to include the services as described in the attached "**Amendment No. 5 to Scope of Services.**"

This AMENDMENT shall be deemed a part of, and shall be subject to all terms and conditions of the existing Agreement. Except as modified above, the existing Agreement shall remain in full force and effect.

West Haymarket Joint Public Agency

_____

Title:_____

Environmental Consultant – Alfred Benesch & Company

By: Frank Uhland

Title: ENVIRONMENTAL GROUP MANAGER

4 Attachments:

Amendment no. 5 to Scope of Services

Clean Harbors Invoice nos. DK1143908, DK1193374 and DK1118377

Amendment No. 5 to Scope of Services

Qualified Environmental Consultants

Haymarket Environmental Remediation Services - Specification no. 10-083

On July 15, 2010, Alfred Benesch & Company (Consultant) entered into an agreement with the City of Lincoln under EO 083296 to provide environmental remediation consulting services. The agreement allows for adjustments in the scope of services and corresponding adjustments in compensation for such changes in the scope of services.

This Amendment No. 5 provides for an extended contract period through June 30, 2013, expanded scope of services and fee for Task 1 – Project Management, Task 4 – Prepare Voluntary Cleanup Program (VCP) Application, Task 8 – Title 200 Investigation; and new scope and fee for Task 21 –Remedial Action Oversight and Reporting - BNSF Transition Property.

Task 1 – Project Management

Current Contract Authorized Fee: Time and Materials – Cost not to Exceed $197,120.00

The original scope, fee and assumptions associated with this task included:

All project management functions related to:

- Regular Client and Agency communications
- Staff assignment and coordination
- Quality control of work product
- Budgeting, accounting, and invoices
- Internal team meetings
- Client meetings and progress reports
- Open house and public meeting support
- Updating and distributing project timelines and
- Supporting completion of Brownfields Cleanup Grant applications

Assumptions:

- Eighteen Month Project (July/2010 –December/2011)
- Management/Oversight only of Sites North of "O" St. in the original WHA study area
- Weekly meetings attended by two Consultant representatives during the period of the Project assumed to be either at the office of the Client or the Consultant; in some instances, telephone coordination may be sufficient to conduct meetings.
- Bi-monthly meetings with the Nebraska Department of Environmental Quality (NDEQ) assumed to be attended by two Consultant representatives during the period of the Project assumed to be either at the office of the Client, NDEQ or the Consultant; in some instances, telephone coordination may be sufficient to conduct meetings.
- Internal Consultant budget review will be conducted on an ongoing basis with monthly invoices and progress reports processed at the end of each fiscal month.

- Provide technical support for up to four public meetings during the Project to explain the details that are important for a good general understanding of remedial planning and cleanup processes. The type, location, and timing of the meetings shall be determined by the Client and Consultant. The meetings are anticipated to be two informational open houses relative to a Brownfields Cleanup Grant application and two public meetings relative to the VCP and Petroleum remediation proposed plans. Consultant will provide up to two representatives at each open house and public meeting and prepare required presentation material.

Supplemental Request: The JPA has requested Consultant to continue VCP and Title 200 – related investigations, remedial action planning and oversight; reporting and general response and consultation related to the Environmental Contingency Plan (ECP) and other remediation and compliance – related activities associated with the project. Support will continue for ongoing investigations and remedial action north of "O" Street – referred to as the West Haymarket Redevelopment Site North (WHRSN) as well as additional properties south of "O" Street (referred to as West Haymarket Redevelopment Site South or WHRSS) to be included in the NDEQ's VCP and/or subject to EPA Region 7 oversight for purposes of PCB cleanup operations on regulated properties.

A similarly scoped effort including assumptions described in the original Scope and Fee for "Haymarket Environmental Remediation Services - Specification no. 10-083" is anticipated for the Period January/2012 through June/2013 as detailed in the following cost estimate:

		Task 1	
ITEM/DESCRIPTION	RATE	Project Management	
LABOR		HRS	$$
PIC Linderholm	$176.00	24	$4,224
Project Manager Uhlarik	$155.00	1248	$193,440
Senior Scientist Imig	$125.00	312	$39,000
Drafting/GIS	$101.00	40	$4,040
WP Support/Accounting	$50.00	40	$2,000
TOTAL LABOR (HRS/$)		1664	$242,704
EXPENSES	RATE	UNITS	$$
Travel/Mileage	$0.56	3600	$1,998
TOTAL EXPENSES			$1,998
TOTAL TASK/ACTIVITY			***$244,702***

Labor rates assume a 3% escalation of CY 2011 standard labor rates for Benesch and Olsson Associates personnel assigned to Task 1 responsibilities over the anticipated performance period of January, 2012 through June, 2013. This supplementary request for **$244,702.00** brings the total authorization for this task to **$441,882.00.**

Task 4 – Prepare Voluntary Cleanup Program (VCP) Application

Current Contract Authorized Fee: Time and Materials – Cost not to Exceed $30,415.00 (Previously expended on sites within the WHRSN Study Area)

This task includes preparation of the application form and all supporting information for participation in the NDEQ's VCP including preparation of a VCP investigation work plan for any data gaps in the VCP Project Study Area – tentatively identified as including the Alter Trading Corporation and JayLynn, LLC properties making up the WHRSS Study Area. This task will include gathering/confirming all information relevant to affected properties and property owners, current and historical land use and known or potential sources of contamination and affected media, regulatory history, investigation and remedial history/status, access agreements obtained or required and obtaining Client and/or property owner signatures relevant to verification and certification of the information provided.

Estimated Fee: Time and Materials – Cost not to Exceed $33,200.00

Detailed estimate:

		Task 4	
ITEM/DESCRIPTION	RATE	VCP Application and Work Plan	
LABOR		HRS	$$
Project Manager Uhlarik	$155.00	8	$1,240
Senior Scientist Imig	$125.00	80	$10,000
Senior Project Engineer/Lim/McPeak	$134.00	24	$3,216
Geochemist/Data Specialist/Lippoldt	$126.00	80	$10,080
Senior Scientist QC/Goodenkauf	$126.00	16	$2,016
Staff Scientist/Geologist	$92.00	24	$2,208
GIS/Data Management	$101.00	40	$4,040
WP Support/Accounting	$50.00	8	$400
TOTAL LABOR (HRS/$)		280	$33,200
EXPENSES	RATE	UNITS	$$
TOTAL EXPENSES			$0
TOTAL TASK/ACTIVITY			***$33,200***

Labor rates assume a 3% escalation of CY 2011 standard labor rates for Benesch and Olsson Associates personnel assigned to Task 4 responsibilities over the anticipated performance period of January, 2012 through June, 2012. This supplementary request brings the total authorization for this task to **$63,615.00.**

Task 6 – Environmental Contingency Plan

Current Contract Authorized Fee: Time and Materials – Cost not to Exceed $290,470.00

Supplemental Request: Disposal fees incurred by Consultant associated with the detection and removal of hazardous wastes during site preparation activities were not budgeted or previously reimbursed. Disposal fees paid to Clean Harbors were incurred by Consultant in the amount of **$21,129.71** as reflected in the attached invoices paid by Consultant. Consultant is seeking reimbursement for disposal fees to backfill budgeted labor fees reserved for oversight and administration of the ECP. This supplementary request brings the total authorization for this task to **$311,599.71.**

Task 8 – T-200 Investigation

Current Contract Authorized Fee – Time and Material – Cost not to Exceed $42,995.00

Supplemental Request: Supplemental investigation, reporting and monitoring is required to continue groundwater monitoring of seven (7) monitoring wells, installation and sampling of up to fifteen (15) temporary monitoring wells and completion of Tier I/II Investigation Reports and groundwater monitoring reports to the NDEQ under the Petroleum Remediation Program. Specifically NDEQ has requested construction/installation of up to fifteen (15) temporary groundwater monitoring wells in the eastern portion of the WHRSN to further delineate and monitor free product. It is anticipated that up to ten (10) of these additional wells may require completion as "permanent" monitoring wells. These wells will require monitoring for free product for four consecutive quarters. Monitoring can be conducted concurrent with ongoing monitoring of seven (7) wells in the western portion of the East Flank of the WHRSN in the vicinity of the "Big Dig" excavation area. "Big Dig" wells require a minimum of two additional quarterly monitoring events prior to closure. Quarterly and final reporting to NDEQ will be conducted. Separate final closure reports will be provided for the two areas in order to accommodate redevelopment/construction priorities in the East Flank.

Additional fees of **$62,470.00** are requested to complete this supplemental work as detailed below bringing the total authorization for Task 8 to **$105,465.00**:

		Task 8	
ITEM/DESCRIPTION	T-200 RATE	T-200 Investigation	
LABOR		HRS	$$
Project Manager	$115.00	24	$2,760
Staff Scientist/Geologist	$95.00	120	$11,400
Sr. Technician	$65.00	160	$10,400
Survey/Staking	$90.00	16	$1,440
GIS/Data Management	$95.00	24	$2,280
TOTAL LABOR (HRS/$)		344	$28,280
EXPENSES	T-200 RATE	UNITS	$$
Travel/Mileage	$0.56	1000	$555
Water Level Indicator	$50.00	7	$350
Organic Vapor Meter	$95.00	3	$285
Drilling Services (Monitoring Wells Installation)	$2,000.00	15	$30,000
Well Abandonment Materials	$250.00	12	$3,000
TOTAL EXPENSES			$34,190
TOTAL TASK/ACTIVITY			***$62,470***

Billing rates for Task 8 will continue to be at the applicable rates for personnel identified in the NDEQ's 2008 Reasonable Rate Schedule unless modified by NDEQ during the time of performance of this work.

Task 21 – BNSF Transition Property PCB Remediation Oversight and Reporting

Consult has been requested to provide construction oversight and completion of required reporting to EPA for excavation and off-site disposal of PCB impacted soils associated with the "BNSF Transition Property" portion of the Alter Trading Corporation property in the WHRSS. Consultant will provide continuous observation and coordination support to the selected contractor and City/JPA project representative to ensure adherence to the construction contract and regulatory requirements of the remedial action plan for the site approved by EPA. Consultant will conduct required sampling and direct supplemental excavation activities beyond the base bid quantities as required in obtaining closure of the site. Consultant will provide project management and field technician support for a project duration not anticipated to exceed six (6) weeks plus all necessary labor to complete a final approved remedial action completion report. Assumptions include contractor notice to proceed no later than January 15, 2012 and all necessary site work completed on or before March 1, 2012. Final reporting and approval by EPA is projected to be completed by June 1, 2012.

The total projected fees for this task are estimated at **$81,727.00** as detailed below:

		Task 21	
ITEM/DESCRIPTION	RATE	BNSF Transition Property RA Oversight	
LABOR		HRS	$$
Project Manager Uhlarik	$155.00	24	$3,720
Senior Scientist Imig	$125.00	120	$15,000
Senior Project Engineer/Lim/McPeak	$134.00	24	$3,216
Geochemist/Data Specialist/Lippoldt	$126.00	24	$3,024
Senior Scientist QC/Goodenkauf	$126.00	16	$2,016
Staff Scientist/Geologist	$92.00	80	$7,360
Sr. Technician	$84.00	200	$16,800
GIS/Data Management	$101.00	24	$2,424
WP Support/Accounting	$50.00	8	$400
TOTAL LABOR (HRS/$)		520	$53,960
EXPENSES	RATE	UNITS	$$
Travel/Mileage	$0.56	300	$167
On-site Lab Supplies	$20.00	30	$600
Lab Expenses	$90.00	300	$27,000
TOTAL EXPENSES			$27,767
TOTAL TASK/ACTIVITY			***$81,727***

Labor rates assume a 3% escalation of CY 2011 standard labor rates for Benesch and Olsson Associates personnel assigned to Task 21 responsibilities over the period of January, 2012 through May, 2012.

INVOICE
Invoice No DK1143908

SEP 19 2011

REMIT TO:
Clean Harbors Env. Services
PO Box 3442
Boston, MA 02241-3442

ok for
00110058.00.006
9/20/11

OFFICE:
Clean Harbors Env Services Inc
2549 North New York Street
Wichita, KS 67219
(316) 269-7400

If you have any questions regarding this invoice, please contact your customer service representative at the telephone number listed above

SOLD TO:
Frank Uhlarik
Alfred Benesh & Company
14748 West Center Road
Suite 200
Omaha, NE 68144- 0000

JOB SITE/GENERATOR:
West Haymarket Arena Site
201 North 7th Street
Lincoln, NE 68508

Job Description: Drum Shipment

** Payable In USD funds **

Last Service Date	Invoice No	Customer	Sales Order	Purchase Order	Terms
26 Aug 2011	DK1143908	AL2500	DK3734751	00110058.00.00006	NET 15 DAYS

SUMMARY BY LINE TYPE

Analytical	$75.00	
Disposal	$2,990.00	
Fees	$610.66	
Transportation	$513.13	
SUBTOTAL	**$4,188.79**	**USD**
TAX	**0.00**	
INVOICE TOTAL	**$4,188.79**	**USD** ← **PLEASE PAY THIS AMOUNT**

Manifest Info	Item ID	Description	Shipment Qty	Shipment UOM	Billing Qty	Billing UOM	Unit Price	Amount
		26 Aug 2011						
003079961FLE 1	DISPSL / CCRK	Creosote Drums CH517605	5	DM	5.000	85DM	598.0000	$2,990.00
	FEE-DISP	Nebraska Hazardous Waste Treatment/Incineration Fee			1.055	T	1.9200	$2.03
003079961FLE	TRAN	TRANSPORTATION			1.000	EA	420.0000	$420.00
	HUBTRANS	Freight to manifested disposal facility			6.250	EA	14.9003	$93.13
	PROFILE1	Profile Fee for Profile No: CH517605 - Creosote Drums			1.000	EA	75.0000	$75.00
	FEE	Recovery Fee			3,580.160	EA	0.1700	$608.63
							SUBTOTAL	**$4,188.79**
							TAX	**$0.00**
							TOTAL	**$4,188.79**

Interest will be charged at a rate of 1.5% per month for all past due amounts.

Invoice Date: 02 Sep 2011

PLEASE RETURN A COPY OF INVOICE WITH PAYMENT - THANK YOU

INVOICE
Invoice No DK1193374

OCT 27 2011

REMIT TO:
Clean Harbors Env. Services
PO Box 3442
Boston, MA 02241-3442

OFFICE:
Clean Harbors Env Services Inc
2549 North New York Street
Wichita, KS 67219
(316) 269-7400

If you have any questions regarding this invoice, please contact your customer service representative at the telephone number listed above

ok
for Uhl
00110058.00.0006
11/21/11

SOLD TO:
Frank Uhlarik
Alfred Benesh & Company
14748 West Center Road
Suite 200
Omaha, NE 68144- 0000

JOB SITE/GENERATOR:
West Haymarket Arena Site
201 North 7th Street
Lincoln, NE 68508

Job Description: CH517611B,Impacted Soil/Debris VIA CHES TO LG

** Payable in USD funds **

Last Service Date	Invoice No	Customer	Sales Order	Purchase Order	Terms
01 Sep 2011	DK1193374	AL2500	DK3746452	00110058 00.00006	NET 15 DAYS

SUMMARY BY LINE TYPE

Disposal	$0.00	
Fees	$792.77	
Hazardous Waste Fee	$500.00	
Transportation	$3,839.50	
SUBTOTAL	**$5,132.27**	**USD**
TAX	**0.00**	
INVOICE TOTAL	**$5,132.27**	**USD** ← **PLEASE PAY THIS AMOUNT**

Manifest Info	Item ID	Description	Manifest Qty	Manifest UOM	Billing Qty	Billing UOM	Unit Price	Amount
		31 Aug 2011						
002232880FLE 1	DISPSL / CBPR	Impacted Soil/Debris RTAF - Failed YV CH517611B	19,820	P	1.000	MIN	0.0000	$0.00
	FEE-DISP	Oklahoma Hazardous Waste Storage, Treatment or Land Disposal Fee			9.430	T	9.0000	$84.87
002232880FLE	TRAN	TRANSPORTATION			1.000	EA	3,685.0000	$3,685.00
	DEM	Loading Demurrage			1.500	HR	103.0000	$154.50
	FACTAX	Rejection Fee			1.000	EA	500.0000	$500.00
	FEE	Recovery Fee			4,424.370	EA	0.1600	$707.80
							SUBTOTAL	**$5,132.27**
							TAX	**$0.00**
							TOTAL	**$5,132.27**

Interest will be charged at a rate of 1.5% per month for all past due amounts.

INVOICE
Invoice No DK1118377

NOV 14 2011

REMIT TO:
Clean Harbors Env. Services
PO Box 3442
Boston, MA 02241-3442

OFFICE:
Clean Harbors Env Services Inc
2549 North New York Street
Wichita, KS 67219
(316) 269-7400

*If you have any questions regarding this invoice, please **contact your customer service** representative at the telephone number listed above*

ok
00110058.00.006
11/21/11

SOLD TO:
Frank Uhlarik
Alfred Benesh & Company
14748 West Center Road
Suite 200
Omaha, NE 68144- 0000

JOB SITE/GENERATOR:
West Haymarket Arena Site
201 North 7th Street
Lincoln, NE 68508

Job Description: CH517611B-KP,Impacted Soil/Debris VIA CHES TO KP

**** Payable in USD funds ****

Last Service Date	Invoice No	Customer	Sales Order	Purchase Order	Terms
20 Oct 2011	DK1118377	AL2500	DK3822052	00110058 00 006	NET 15 DAYS

SUMMARY BY LINE TYPE

Analytical	$75.00	
Disposal	$6,622.00	
Fees	$1,646.19	
Material	$78.00	
Per Diem	$170.00	
Service	$247.00	
Transportation	$2,965.00	
SUBTOTAL	**$11,803.19**	**USD**
TAX	**5.46**	
INVOICE TOTAL	**$11,808.65**	**USD** ← **PLEASE PAY THIS AMOUNT**

Manifest Info	Item ID	Description	Manifest Qty	Manifest UOM	Billing Qty	Billing UOM	Unit Price	Amount
		07 Oct 2011						
003078733FLE 1	DISPSL / CCRK	Impacted Soil/Debris CH517611B-KP	19,080	P	18,920.000	LBS	0.3500	$6,622.00
	FEE-DISP	Nebraska Hazardous Waste Treatment/Incineration Fee			9.460	T	1.9200	$18.16
	ROLLWASH	Washout of Rolloff, Intermodal or Dump Trailer			1.000	EA	247.0000	$247.00
003078733FLE	TRAN	TRANSPORTATION			1.000	EA	2,965.0000	$2,965.00
	PROFILE1	Profile Fee for Profile No: CH517611B-KP - Impacted Soil/Deb			1.000	EA	75.0000	$75.00
	LINRO	Rolloff Poly Liner CHRT24130			1.000	EA	78.0000 T	$78.00
	PERDIEM3	Per Diem / Subsistence			1.000	DAY	170.0000	$170.00
	FEE	Recovery Fee			10,175.160	EA	0.1600	$1,628.03
							SUBTOTAL	**$11,803.19**
							TAX	**5.46**
							TOTAL	**$11,808.65**

Interest will be charged at a rate of 1.5% per month for all past due amounts.

WH 12-7 Introduce: 1-6-12

RESOLUTION NO. WH- _____

BE IT RESOLVED by the Board of Representatives of the West Haymarket Joint Public Agency:

That the Third Amendment to Escrow Agreement between BNSF Railway Company, West Haymarket Joint Public Agency and U.S. National Bank to modify the Escrow Agent's duties with respect to verification that any BNSF requested charges in disbursements of assets on banking instructions have been authorized by BNSF. is hereby approved and the Chairperson of the West Haymarket Joint Public Agency Board of Representatives is hereby authorized to execute said Contract Agreement on behalf of the JPA.

The City Clerk is directed to return a fully executed copy of the Third Amendment to Escrow Agreement to Rick Peo, Chief Assistant City Attorney, for transmittal to the parties.

Adopted this _____ day of January, 2012.

Introduced by:

_____

Approved as to Form & Legality:

_____
Legal Counsel for
West Haymarket Joint Public Agency

West Haymarket Joint Public Agency
Board of Representatives

_____
Tim Clare

_____
Chris Beutler

_____
Eugene Carroll

THIRD AMENDMENT TO ESCROW AGREEMENT

Escrow Account No_____

Effective Date: December ___, 2011

THIS THIRD AMENDMENT TO ESCROW AGREEMENT ("Third Amendment") is dated to be effective the ___ day of December, 2011 (the "Effective Date"), by and between **BNSF RAILWAY COMPANY**, a Delaware corporation, ("**BNSF**") and the **WEST HAYMARKET JOINT PUBLIC AGENCY**, a political subdivision of the State of Nebraska created by the Nebraska Joint public Agency Act, Neb. Rev. Stat. § 13-2501 *et seq.* (**"JPA"**), and **U.S. BANK NATIONAL ASSOCIATION**, a national banking association, ("**Escrow Agent**").

RECITALS

A. BNSF, the City of Lincoln, Nebraska ("City") and Escrow Agent entered into that certain Escrow Agreement dated October 18, 2010 (the **"Escrow Agreement"** in connection with plans by the City and JPA to construct entertainment, recreation, lodging, offices, retail and/or other complementary and/or supporting facilities (collectively, the **"West Haymarket Project")**, and City assigned and JPA assumed the City's interest in the Escrow Agreement.

B. BNSF, JPA, and Escrow Agent entered into that certain First Amendment to Escrow Agreement dated December 29, 2010, and entered into that certain Second Amendment to Escrow Agreement dated June 15, 2011.

C. BNSF, JPA, and the Escrow Agent desire to further amend the Escrow Agreement to specify security procedures that must be used before disbursements of escrow funds are provided to BNSF.

1. **Escrow Agent's Duties.** Section 2, Escrow Agent's Duties, of the Escrow Agreement shall be amended by adding the following to the end of that section:

Any changes to the disbursements of the Assets or other banking instructions, including the BNSF Work Payment Amount and all additional amounts deposited into the Escrow Account, and the bank accounts or wire instructions to be followed, shall be executed by Escrow Agent only if (a) the changes are authorized by at least two of the Company's Treasurer, any Assistant Treasurer and those Company employees designated by the Treasurer to take actions for this purpose (each a "BNSF Authorized Agent"), through a document bearing their signatures and sent via U.S mail, overnight delivery, facsimile or email; and (b) Escrow Agent verifies the changes in disbursement of assets or banking instructions by contacting one of the BNSF Authorized Agents whose signatures appear on the request through either (i) an email communication to and a reply back from the BNSF Authorized Agent or (ii) a call back to one of the BNSF Authorized Agents whose signatures appear on the request to take actions for this purpose with the primary method being email. Verifications shall be made to email addresses or phone numbers of the BNSF Authorized Agent that are on file with the Escrow Agent. Upon such confirmation, Escrow Agent shall disburse the funds in accordance with the Draw Schedule.

2. **Escrow Agent's Actions and Reliance.** Section 4, Escrow Agent's Actions and Reliance, of the Escrow Agreement shall be amended to read:

Escrow Agent shall not be personally liable for any act taken or omitted by it hereunder if taken or omitted by it in good faith and in the exercise of its reasonable and own best judgment. Escrow Agent shall also be fully protected in relying upon any written notice, instruction, direction, certificate or document which in good faith it believes to be genuine and applicable to the Escrow Account and that conforms to the provisions of Section 2 of this Escrow Agreement.

3. **Escrow Agent Responsibility.** Section 6, Escrow Agent Responsibility, of the Escrow Agreement shall be amended to read:

Escrow Agent shall not be responsible or liable for the sufficiency or accuracy of the form, execution, validity or genuineness of documents, instruments or securities now or hereafter deposited in the Escrow Account, or of any endorsement thereon, or for any lack of endorsement thereon, or for any description therein. Registered ownership of or other legal title to Assets deposited in the Escrow Account shall be maintained in the name of Escrow Agent, or its nominee, only if expressly provided herein, in the Construction Draw Schedule and/or in any amendment to this Escrow Agreement signed by all of the parties. Escrow Agent may maintain qualifying Assets in a Federal Reserve Bank or in any registered clearing agency (including, without limitation, the Depository Trust Company) as Escrow Agent may reasonably select, and may register such deposited Assets in the name of Escrow Agent or its agent or nominee on the records of such Federal Reserve Bank or such registered clearing agency or a nominee of either. Escrow Agent shall not be responsible or liable in any respect on account of the identity, authority or rights of the persons executing or delivering or purporting to execute or deliver any such document, security or endorsement or this Escrow Agreement; provided, however, that all communications with BNSF with respect to changes to the disbursements of the Assets or other banking instructions, including the BNSF Work Payment Amount and all additional amounts deposited into the Escrow Account, and the bank accounts or wire instructions to be followed, shall be subject to the security procedures provided for in Section 2, Escrow Agent's Duties, of this Escrow Agreement.

4. **Notices/Directions to Escrow Agent.** Section 8, Notices/Directions to Escrow Agent, of the Escrow Agreement shall be amended to read:

Notices and directions to Escrow Agent from Depositors, or from other persons authorized to give such notices or directions as expressly set forth herein below and/or any amendment to this Escrow Agreement signed by all of the parties, shall be in writing and signed by an authorized representative as identified herein and/or in any amendment to this Escrow Agreement signed by all of the parties, and shall not be deemed to be given until actually received by Escrow Agent's employee or officer who administers the Escrow Accounts. Escrow Agent shall not be responsible or liable for the authenticity or accuracy of notices or directions properly given hereunder if the written form and execution thereof on its face purports to satisfy the requirements applicable thereto as set forth herein and/or in any amendment to this Escrow Agreement signed by all of the parties, as determined by Escrow Agent in good faith without additional confirmation or investigation beyond compliance with the security procedures set forth in Section 2, Escrow Agent's Duties, of the Escrow Agreement as amended by this Third Amendment to Escrow Agreement.

5. **Counterparts.** This Third Amendment to Escrow Agreement may be executed in any number of counterparts, each of which shall be deemed to be one and the same instrument. The exchange of copies of this Third Amendment to Escrow Agreement and of signature pages by facsimile transmission shall constitute effective execution and delivery of this Third Amendment to Escrow Agreement as to the parties and may be used in lieu of the original of this Escrow Agreement for all purposes. Signatures of the parties transmitted by facsimile shall be deemed to be their original signatures for all purposes, subject to the compliance procedures set forth in this amendment.

[*Signature Page Follows*]

Signature Page for Amendment to Escrow Agreement

IN WITNESS WHEREOF, the undersigned have affixed their signatures and hereby adopt as part of this instrument Exhibit Z-1 and Schedule I, which are incorporated by reference.

BNSF RAILWAY COMPANY
a Delaware corporation

By: _____

Its: _____

BNSF Railway Company
2600 Lou Menk Drive

Fort Worth, TX 76131
Phone: (817) 352-____
Fax: (817) 352-____

Tax I.D. _____

West Haymarket Joint Public Agency

By: _____
Chris Beutler

Its: _____Chairperson_____

Notices to West Haymarket Joint Public Agency shall be sent to:

Steve Hubka
Finance Director
555 South 10th Street, Suite 103
Lincoln, NE 68508
Phone: (402) 441-7411
Fax: (402) 441-8325

Tax I.D. _____

U.S. BANK NATIONAL ASSOCIATION,
as Escrow Agent

By:_____
Its:_____

Notices to Escrow Agent shall be sent to:

U.S. Bank Corporate Trust Services
60 Livingston Avenue
EP-MN-WS3T
St. Paul, MN 55107-2292
Attn: Susan Selser
(651) 495-3731
(651) 495-8087 (fax)
Email: susan.selser@usbank.com

With Fax and Email Copy to:
Sherrie L. Pantle
(206) 344-4676
fax: (206) 344-4632
Email: sherrie.pantle@usbank.com

Exhibit Z-1 Draw Schedule - West Haymarket Track Relocation Project				
	Month	Amount $ (Relects $44M)	City Additional $	City Additional $ Comments
4th Quarter, 2010	October	$5,000,000	$1,575,770	2010 BNSF Grading work (engineer's estimate $1,565,770); Fiber Amtrak connection placeholder ($10K)
	November	$0	$0	
	December	$8,000,000	$730,000	Flagging for 2011 arena work ($500K placeholder); Temporary crossings ($130K); Upgrades to 2nd/3rd & J Street placeholder ($100K)
1st Quarter, 2011	January	$0	$0	
	February	$0	$0	
	March	$13,000,000	$0	
2nd Quarter, 2011	April	$0	$0	
	May	$0	$0	
	June	$7,000,000	$0	
3rd Quarter, 2011	July	$0	$0	
	August	$0	$0	
	September	$4,000,000	$0	
4th Quarter, 2011	October	$0	$0	
	November	$0	$0	
	December	$3,000,000	$500,000	Flagging for 2012 arena work ($500K placeholder)
1st Quarter, 2012	January	$0	$0	
	February	$0	$0	
	March	$3,000,000	$0	
2nd Quarter, 2012	April	$0	$0	
	May	$0	$0	
	June	$1,000,000	$0	
3rd Quarter, 2012	July	$0	$0	
	August	$0	$0	
	September	$0	$0	
4th Quarter, 2012	October	$0	$0	
	November	$0	$0	
	December	$0	$0	
	Total ($)	**$44,000,000**	**$2,805,770**	

*Note 1: the Amount ($) shown for each quarter is the amount that BNSF will be drawing in-advance of the following quarter. Example: 4th quarter 2010 December shows $8,730,000, this is the amount BNSF requires for work, materials, etc. for
**Note 2: $1,000,000 property donation not included in above schedule since it will be paid directly to BNSF at first BNSF clos