AMENDMENT TO AGREEMENT
CITY OF LINCOLN
ANNUAL SUPPLY FOR SIGN POSTS & BRACKETS
BID NO. 12-255
SECOND RENEWAL

This Amendment is hereby entered into and between **Steel Fabricators, Inc., 2400 S. Folsom Ct., P.O. Box 22207, Lincoln, NE 685225** (hereinafter "Contractor") and **City of Lincoln** (hereinafter "City"), for the purpose of amending an Agreement dated **October 24, 2012**, under **D. O. No. 08284**, (the "Agreement"), for **The Annual Supply for Sign Posts & Brackets, Bid No. 12-255**, which is made a part hereof by this reference.

WHEREAS, the original term of the Agreement is **October 24, 2012 through October 23, 2013**, with the option to renew for three (3) additional **one (1) year terms** upon written mutual consent of both parties; and

WHEREAS, the Agreement was amended by the City to renew the agreement for an additional one year period from **October 24, 2013 through October 23, 2014**,

WHEREAS, the parties wish to renew the agreement for an additional one (1) year term beginning **October 24, 2014 through October 23, 2015**; and

WHEREAS, the estimated expenditures for City Departments for the term of this renewal shall not exceed **$15,000.00** without prior approval by the City of Lincoln.

NOW, THEREFORE, IN CONSIDERATION of the mutual covenants stated herein the parties agree as follows:

1) The term of the Agreement shall be from **October 24, 2014 through October 23, 2015.**
2) The estimated expenditures for City Departments for the term of this renewal shall not exceed **$15,000.00** without prior approval by the City of Lincoln.
3) All other terms of the Agreement, not in conflict with this Amendment, shall remain in full force and effect.

The Parties do hereby agree to all the terms and conditions of this Amendment. This Amendment shall be binding upon the parties, their heirs, administrators, executors, legal and personal representatives, successors, and assigns.

IN WITNESS WHEREOF, the Parties do hereby execute this Amendment.

Official City Use Only

Dated this 8th day

of October 2014

Miki Esposito

Public Works & Utilities Director

Supplier, please fill in the date and following information and mail back to our office; a faxed copy is not acceptable.

Company Name: (Please Print)	STEEL FABRICATORS, INC
By: (Please Sign)	R.H. Becker
By: (Please Print)	ROBERT H. BECKER
Title: (Please Print)	PRES.
Company Address: (Please Print)	2400 S. FOLSOM CT. LINCOLN, NE
Company Phone & Fax: (Please Print))	(402) 435-3225 (402) 435-3241
E-Mail Address: (Please Print)	steelfab@inebraska.com
Date: (Please Print)	SEPT. 25, 2014
Contact Person For: "Orders or Service" (Please Print)	BOBBY BECKER
Phone Number:	(402) 435-3225

AMENDMENT TO AGREEMENT
CITY OF LINCOLN
ANNUAL SUPPLY FOR SIGN POSTS & BRACKETS
BID NO. 12-255
FIRST RENEWAL

This Amendment is hereby entered into on this 19th day of SEPTEMBER, 2013 by and between **Steel Fabricators, Inc., 2400 S. Folsom Ct., P.O. Box 22207, Lincoln, NE 685225** (hereinafter "Contractor") and **City of Lincoln** (hereinafter "City"), for the purpose of amending an Agreement dated **October 24, 2012**, under **D. O. No. 08284**, (the "Agreement"), for **The Annual Supply for Sign Posts & Brackets, Bid No. 12-255**, which is made a part hereof by this reference.

WHEREAS, the original term of the Agreement is **October 24, 2012 through October 23, 2013**, with the option to renew for three (3) additional **one (1) year terms** upon written mutual consent of both parties; and

WHEREAS, the parties wish to extend the agreement for an additional one (1) year term beginning **October 24, 2013 through October 23, 2014**; and

NOW, THEREFORE, IN CONSIDERATION of the mutual covenants stated herein the parties agree as follows:

1) The term of the Agreement shall be from **October 24, 2013 through October 23, 2014.**
2) All other terms of the Agreement, not in conflict with this Amendment, shall remain in full force and effect.

The Parties do hereby agree to all the terms and conditions of this Amendment. This Amendment shall be binding upon the parties, their heirs, administrators, executors, legal and personal representatives, successors, and assigns.

IN WITNESS WHEREOF, the Parties do hereby execute this Amendment.

Official City Use Only

Dated this 7th day
of October 2013

Mike Esposito
Public Works & Utilities Director

Supplier, please fill In the date and following Information and mail back to our office; a faxed copy is not acceptable.

Company Name: (PLEASE PRINT)	STEEL FABRICATORS, INC.
By: (PLEASE PRINT)	ROBERT H. BECKER
By: (PLEASE SIGN)	
Title:	PRES.
Company Address: (PLEASE PRINT)	2400 S. FOLSOM CT. LINCOLN, NE
Company Phone & Fax: (PLEASE PRINT)	402-435-3225 & 402-435-3241
E-Mail Address: (PLEASE PRINT)	STEELFAB@INEBRASKA.COM
Date:	SEPT 19, 2013

DO 08284

12100097

CONTRACT DOCUMENTS

CITY OF LINCOLN
NEBRASKA

ANNUAL SUPPLY
FOR
SIGN POSTS & BRACKETS
BID NUMBER 12-255

Steel Fabricators, Inc.
2400 S. Folsom Ct.
P.O. Box 22207
Lincoln, NE 68522
402-435-3225

CITY OF LINCOLN
CONTRACT AGREEMENT

THIS CONTRACT, made and entered into this _____ day of_____2012, by and between **Steel Fabricators, Inc., 2400 S. Folsom Ct., P.O. Box 22207, Lincoln, NE 68522**, hereinafter called "Contractor", and the City of Lincoln, Nebraska, a municipal corporation, hereinafter called "City".

WHEREAS, the City has caused to be prepared, in accordance with law, Specifications, Plans, and other Contract Documents for the Work herein described, and has approved and adopted said documents and has caused to be published an advertisement for and in connection with said Work, to-wit:

For providing **Annual Supply of Sign Posts & Brackets, Bid No. 12-255** and,

WHEREAS, the Contractor, in response to such advertisement, has submitted to the City, in the manner and at the time specified, a sealed Proposal/Supplier Response in accordance with the terms of said advertisement; and,

WHEREAS, the City, in the manner prescribed by law has publicly opened, read aloud, examined, and canvassed the Proposals/Supplier Responses submitted in response to such advertisement, and as a result of such canvass has determined and declared the Contractor to be the lowest responsible bidder for the said Work for the sum or sums named in the Contractor's Proposal/Supplier Responses, a copy thereof being attached to and made a part of this Contract;

NOW, THEREFORE, in consideration of the sums to be paid to the Contractor and the mutual covenants herein contained, the Contractor and the City has agreed and hereby agree as follows:

1. The Contractor agrees to (a) furnish all tools, equipment, supplies, superintendence, transportation, and other accessories, services, and facilities; (b) furnish all materials, supplies, and equipment specified to be incorporated into and form a permanent part of the complete work; (c) provide and perform all necessary labor in a substantial and workmanlike manner and in accordance with the provisions of the Contract Documents; and (d) execute and complete all Work included in and covered by the City's award of this Contract to the Contractor, such award being based on the acceptance by the City of the Contractor's Proposal, or part thereof, as follows:

   Agreement to full proposal.

2. The City agrees to pay to the Contractor for the performance of the Work embraced in this Contract, the Contractor agrees to accept as full compensation therefore, the following sums and prices for all Work covered by and included in the Contract award and designated above, payment thereof to be made in the manner provided by the City:

   City will pay for products/service, according to the Line Item pricing as listed in Contractors Proposal/Supplier Response, a copy thereof being attached to and made a part of this Contract. The City shall order on an as needed basis for the duration of the contract.

3. Equal Employment Opportunity. In connection with the carrying out of this project, the contractor shall not discriminate against any employee or applicant for employment because of race, color, religion, sex, national origin, ancestry, disability, age or marital status. The Contractor will take affirmative action to ensure that applicants are employed, and that employees are treated during employment, without regard to their race, color, religion, sex, national origin, ancestry, disability, age or marital status. Such action shall include, but not be limited to, the following: employment, upgrading, demotion or transfer; recruitment or recruitment advertising; layoff or termination; rates of pay or other compensation; and selection for training, including apprenticeship.

4. E-Verify. In accordance with Neb. Rev. Stat. 4-108 through 4-114, the contractor agrees to register with and use a federal immigration verification system, to determine the work eligibility status of new employees performing services within the state of Nebraska. A federal immigration verification system means the electronic verification of the work authorization program of the Illegal Immigration Reform and Immigrant Responsibility Act of 1996, 8 U.S.C. 1324 a, otherwise known as the E-Verify Program, or an equivalent federal program designated by the United States Department of Homeland Security or other federal agency authorized to verify the work eligibility status of a newly hired employee pursuant to the Immigration Reform and Control Act of 1986. The Contractor shall not discriminate against any employee or applicant for employment to be employed in the performance of this section pursuant to the requirements of state law and 8 U.S.C.A 1324b. The contractor shall require any subcontractor to comply with the provisions of this section.

5. Termination. This Contract may be terminated by the following:
   5.1) Termination for Convenience. Either party may terminate this Contract upon thirty (30) days written notice to the other party for any reason without penalty.
   5.2) Termination for Cause. The City may terminate the Contract for cause if the Contractor:
      5.2.1) Refuses or fails to supply the proper labor, materials and equipment necessary to provide services and/or commodities.
      5.2.2) Disregards Federal, State or local laws, ordinances, regulations, resolutions or orders.
      5.2.3) Otherwise commits a substantial breach or default of any provision of the Contract Document. In the event of a substantial breach or default the City will provide the Contractor written notice of said breach or default and allow the Contractor ten (10) days from the date of the written notice to cure such breach or default. If said breach or default is not cured within ten (10) days from the date of notice, then the contract shall terminate.

6. Independent Contractor. It is the express intent of the parties that this contract shall not create an employer-employee relationship. Employees of the Contractor shall not be deemed to be employees of the City and employees of the City shall not be deemed to be employees of the Contractor. The Contractor and the City shall be responsible to their respective employees for all salary and benefits. Neither the Contractor's employees nor the City's employees shall be entitled to any salary, wages, or benefits from the other party, including but not limited to overtime, vacation, retirement benefits, workers' compensation, sick leave or injury leave. Contractor shall also be responsible for maintaining workers' compensation insurance, unemployment insurance for its employees, and for payment of all federal, state, local and any other payroll taxes with respect to its employees' compensation.

7. Contract Term. This Contract shall be effective upon execution by both parties. The term of the Contract shall be a one (1) year term with the option to renew with three (3) additional one (1) year terms.

8. The Contract Documents comprise the Contract, and consist of the following:
   1. Contract Agreement
   2. Accepted Proposal/Response
   3. Addendum No. 1
   4. Specifications
   5. Drawings
   6. Special Provisions
   7. Instructions to Bidders
   8. Sales Tax Exemption Form 13

These Contract Agreements, together with the other Contract Documents herein above mentioned, form this Contract, and they are as fully a part of the Contract as if hereto attached or herein repeated.

The Contractor and the City hereby agree that all the terms and conditions of this Contract shall be binding upon themselves, and their heirs, administrators, executors, legal and personal representatives, successors, and assigns.

IN WITNESS WHEREOF, the Contractor and the City do hereby execute this contract.

EXECUTION BY THE CITY OF LINCOLN, NEBRASKA

ATTEST: Joan E Ross
City Clerk

CITY OF LINCOLN, NEBRASKA
Miki Esposito
Director, Public Works & Utilities

Approved by Directorial Order 08284

dated October 24, 2012

EXECUTION BY CONTRACTOR

IF A CORPORATION:

ATTEST: David Brauer (SEAL)
Secretary

Steel Fabricators, Inc.
Name of Corporation

2400 S. Folsom Ct. Lincoln, NE 68522
(Address)

By: Lee Behm
Duly Authorized Official

Pres.
Legal Title of Official

IF OTHER TYPE OF ORGANIZATION:

Name of Organization

Type of Organization

(Address)

By:
Member

By:
Member

IF AN INDIVIDUAL:

Name

Address

Signature

City of Lincoln/Lancaster County (Lincoln Purchasing)
Supplier Response

Bid Information

Bid Creator	Sharon R. Mulder Asst Purchasing Agent
Email	smulder@lincoln.ne.gov
Phone	(402) 441-7410
Fax	(402) 441-6513
Bid Number	12-255 Addendum 1
Title	Annual Supply of Sign Post & Brackets
Bid Type	Bid
Issue Date	09/21/2012
Close Date	10/5/2012 12:00:00 PM CST
Need by Date	

Contact Information

Address	Purchasing 440 S. 8th St. Lincoln, NE 68508
Contact	Sharon Mulder, Asst. Purchasing Agent
Department	Purchasing
Building	
	Suite 200
Floor/Room	
Telephone	(402) 441-7428
Fax	(402) 441-6513
Email	smulder@lincoln.ne.gov

Ship to Information

Address	Public Works & Utilities, Street and Traffic Operations 901 N. 6th Street Lincoln, NE 68508
Contact	
Department	
Building	
Floor/Room	
Telephone	
Fax	
Email	

Supplier Information

Company	Steel Fabricators, Inc.
Address	2400 S. Folsom Ct. P.O. Box 22207 Lincoln, NE 68522
Contact	
Department	
Building	
Floor/Room	
Telephone	1 (402) 435 3225
Fax	1 (402) 435 3241
Email	
Submitted	9/25/2012 10:45:26 AM CST
Total	$21,260.00

Signature _____

Supplier Notes

Bid Notes

Bid Activities

Bid Messages

Please review the following and respond where necessary

#	Name	Note	Response
1	Instructions to Bidders	I acknowledge reading and understanding the Instructions to Bidders.	Yes
2	Quantities	I acknowledge that the quantities listed for each line item are an estimated yearly amount. The City does not guarantee any dollar amount or order quantities for the term of the contract.	Y
3	Drawings	I acknowledge reading and understanding the Project Drawings.	Yes
4	Hourly Rate for Fabrication	List your hourly rate for fabrication.	$62.00 / hour
5	Delivery	State number of delivery days ARO. FOB to the City/County at the location specified with all transporation charges paid.	2 to 4 weeks
6	Contact	Name of person submitting this bid:	Bobby Becker
7	Bid award	I acknowledge and understand that the City, County and/or Public Building Commission reserves the right to award bids item-by-item, with or without alternates/options, by groups, or "lump sum" such as shall best serve the requirements and interests of the City, County and/or Public Building Commission. If your pricing is based on an all-or-nothing basis, please indicate so in the Supplier Notes section of your E-Bid response.	Yes
8	Renewal is an Option	Contract Extenstion Renewal is an option.	Yes
9	Special Provision Term Contract Provisions	I acknowledge reading and understanding the Special Provision Term Contract Provisions.	Yes
10	Term Clause of Contract	I acknowledge that the term of the contract is for a one (1) year term with the option for three (3) additional one (1) year renewals from the date of the executed contract. . ((a) Are your bid prices firm for the first one (1) year contract period. YES or NO (b) Are your bid prices subject to escallation/de-escalation YES or NO (c) If (b), state period for which prices will remain firm: through _____	(a.) yes (b.) yes (c.) first year
11	Sample Contract	I acknowledge reading and understanding the sample contract.	Yes
12	Electronic Signature	Please check here for your electronic signature.	Yes
13	Agreement to Addendum No. 1	Respondent hereby certifies that the change set forth in this addendum has been incorporated in their proposal and is part of their bid. Reason: See Bid Attachments section for Addendum information.	Yes

Line Items

#	Qty	UOM	Description	Response
3	60	EA	Street Sign Posts x 12'	$78.00
	Item Notes:		 Steel posts to include wing attachment Powder coated, black	
	Supplier Notes:			
4	30	EA	Street Sign Posts x 13'	$81.00
	Item Notes:		 Steel posts to include wing attachment Powder coated, black	
	Supplier Notes:			
5	50	EA	Street Sign Posts x 14'	$83.00
	Item Notes:		 Steel Posts to include wing attachment Powder coated, black	
	Supplier Notes:			
6	50	EA	Street Sign Posts x 15'	$86.00
	Item Notes:		 Steel posts to include wing attachment Powder coated, black	
	Supplier Notes:			
7	50	EA	Street Name Arm, 14"	$38.00
	Item Notes:		 Powder coated, black	
	Supplier Notes:			
8	25	EA	Street Name Arm, 20"	$40.00
	Item Notes:		 Powder coated, black	
	Supplier Notes:			
9	40	EA	45 Degree Sign Bracket	$11.00
	Item Notes:		 High gloss green finish	
	Supplier Notes:		Prime painted gray finish	
10	60	EA	Side by Side Sign Brackets	$10.00
	Item Notes:		 Primed Gray	
	Supplier Notes:			

11	10	EA	Flush Mount Candlestick Base	$46.00
	Item Notes:	 Galvanized		
	Supplier Notes:			
12	30	EA	Candlestick to Channel Post Adapter	$10.00
	Item Notes:	 Galvanized		
	Supplier Notes:			
13	50	EA	Candlestick Adaptors	$13.00
	Item Notes:	 Galvanized		
	Supplier Notes:			
14	25	EA	Channel Post Stabilizer	$14.00
	Item Notes:	 Primed Gray		
	Supplier Notes:			
			Response Total:	$21,260.00

CITY OF LINCOLN
ENGINEERING SERVICES
SPECIFICATIONS FOR
FABRICATED POSTS AND BRACKETS

1. APPLICATION

1.1 This specification described the minimum acceptable requirements for street sign posts, candlestick adapters, and steel sign brackets.

2. MATERIAL

2.1 All items shall be made from new, ATSM tested material.

3. DESIGN AND FABRICATION

3.1 Street sign posts shall be fabricated as detailed on City of Lincoln Standard Plan 78 (attached).

3.1.1 Posts shall be powder painted gloss black with a high quality powder coating material.

3.1.2 The post length shall be specified in the order.

3.1.2.1 Street sign posts shall be 10.5', 12', or 13'.

3.2 Candlestick adapter shall be fabricated as detailed on attached drawing.

3.3 Steel sign brackets shall be fabricated as detailed on attached drawing.

4. SHIPMENT

4.1 All items shall be delivered to Traffic Engineering, 901 North 6th Street, Lincoln, Nebraska. Bid price shall include freight. (FOB Destination)

4.2 Posts shall be delivered on a **flat bed truck or trailer**; no enclosed trailers shall be allowed.

4.3 Items which have been scratched or marred in shipment due to improper packaging or handling may be rejected.

Addendum #1
Annual Supply of Sign Post and Brackets
Bid No. 12-255

Addenda are instruments issued by the City prior to the date for receipt of offers which will modify or interpret the specification document by addition, deletion, clarification or correction.

Please acknowledge receipt of this addendum in the space provided in the Attribute Section.

Be advised of the following changes and clarifications to the City's specification and bidding documents:

1. Changes/Corrections to the following line items:

#1	Delete line item 1
#2	Delete line item 2
#5	Removed "Galvanized"
#6	Removed "Galvanized"
#7	Reads "Powder coated, black"
#8	Reads "Powder coated, black"
#9	Removed "Galvanized" and "Powder coated, black"
#10	Shall be "Primed Gray"
#11	Added "Galvanized"
#12	Added "Galvanized"
#14	Removed all item notes and replaced with "Primed Gray"

All other terms and conditions shall remain unchanged.

Dated this 24th day of September, 2012.

Sharon Mulder,
Assistant Purchasing Agent

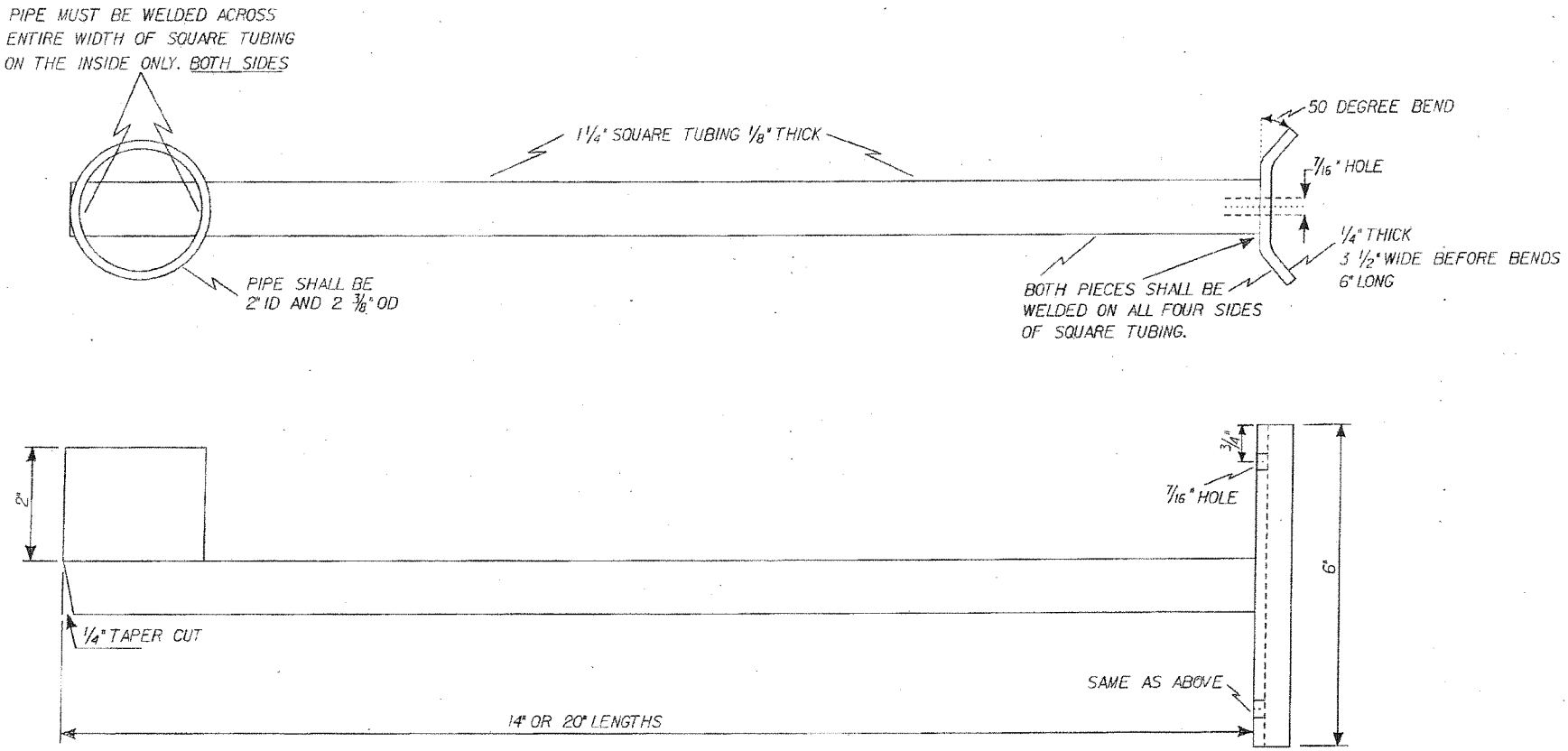

ALL BRACKETS SHALL BE MADE OF HIGH QUALITY STEEL
AND POWDER COATED GLOSS BLACK WITH A HIGH QUALITY MATERIAL

LIGHT POLE BRACKET FOR STREET NAME SIGNS			
CITY OF LINCOLN, NEBRASKA DEPARTMENT OF TRANSPORTATION TRAFFIC ENGINEERING DIVISION			
DATE 7-03-08	SCALE NONE		
NO. SHEETS 1	DRAWN DLS		SHEET NO. 1
condlestick.dgn	DRAWING No. 1		

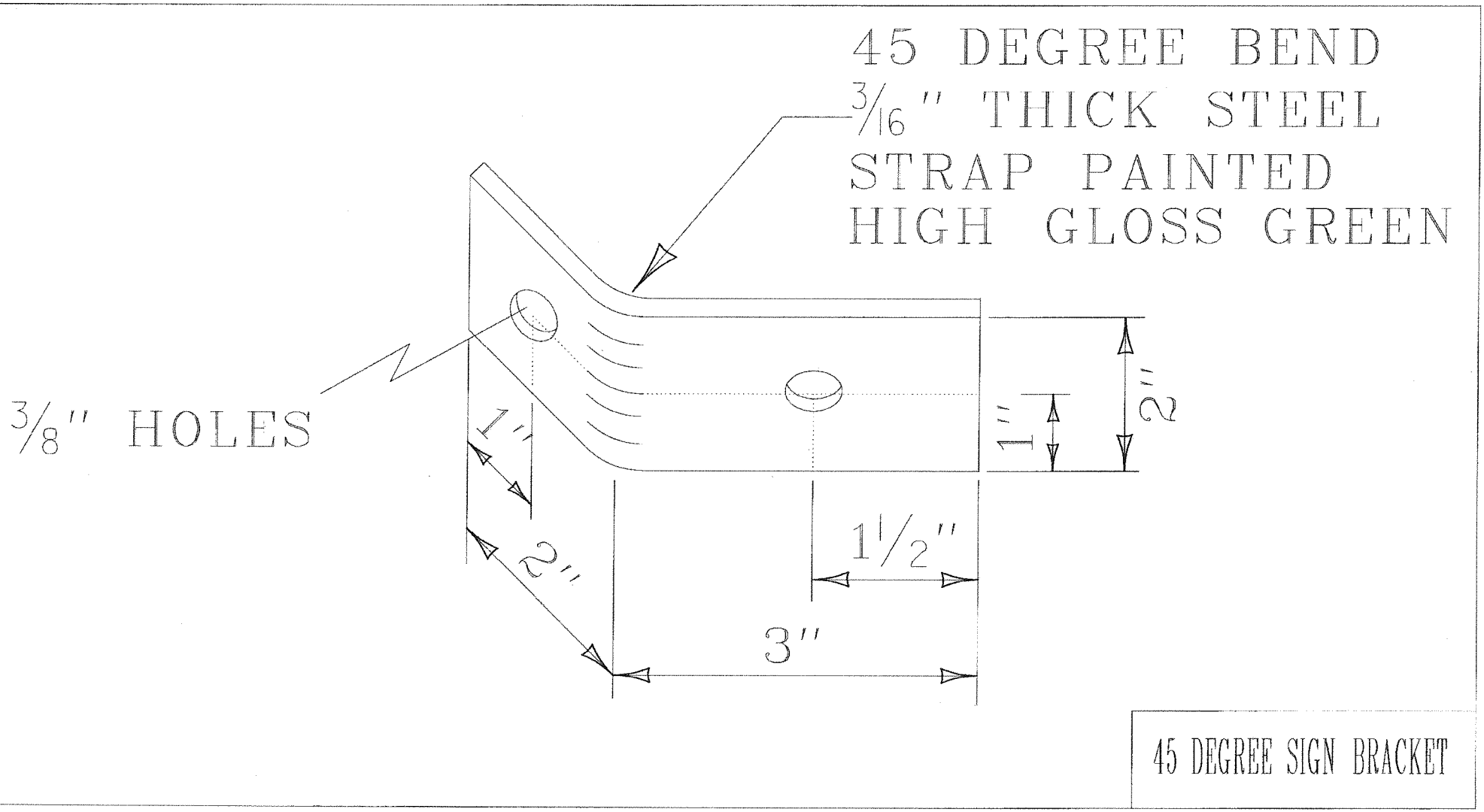

45 DEGREE SIGN BRACKET

1" X 3/16" PAINTED STEEL STRAP GLOSS SILVER

3/8" HOLE

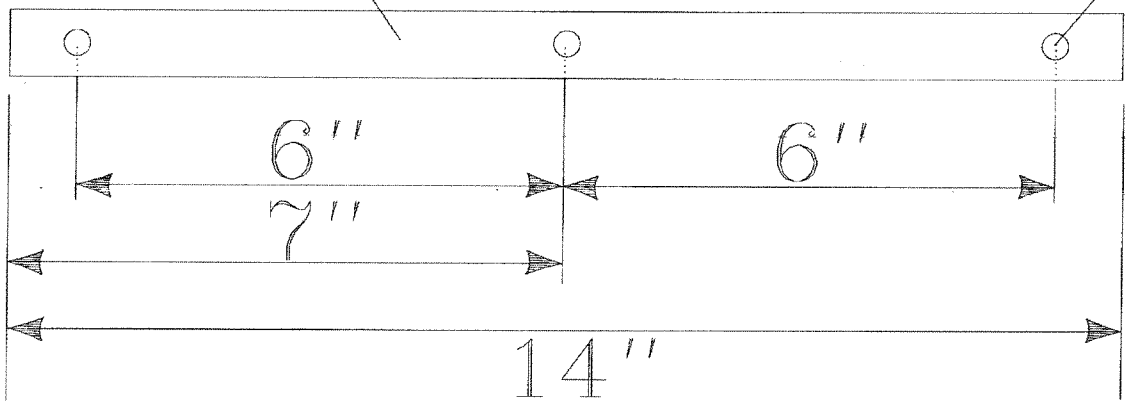

SIDE BY SIDE
SIGN BRACKETS

GALVANIZED STEEL

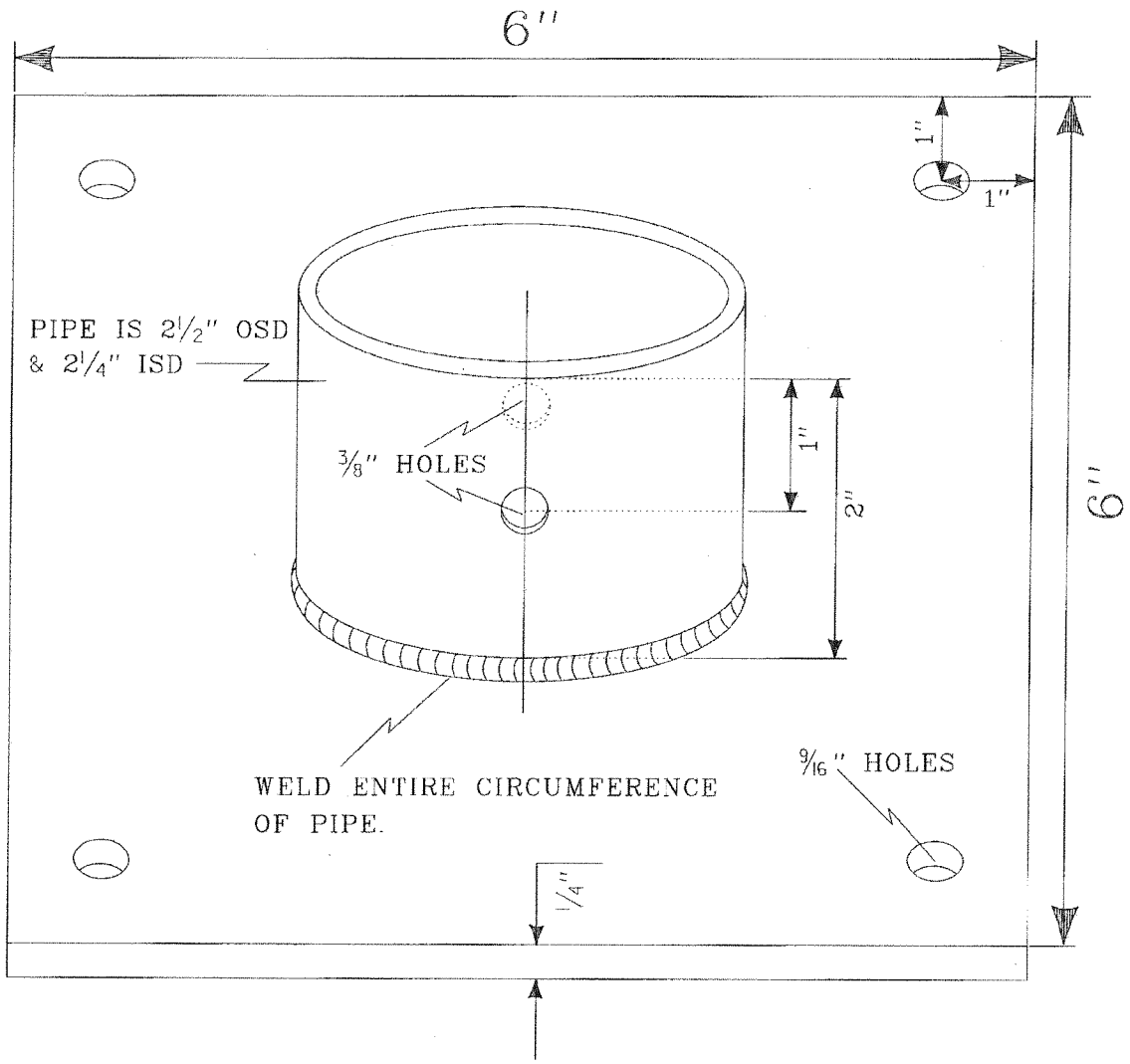

FLUSH MOUNT
CANDLE STICK BASE

BOTH PIECES OF PIPE SHALL BE WELDED TOGETHER ON BOTH SIDES.

3/8" HOLE

2 1/2" OD 14 GAUGE ROUND TUBING

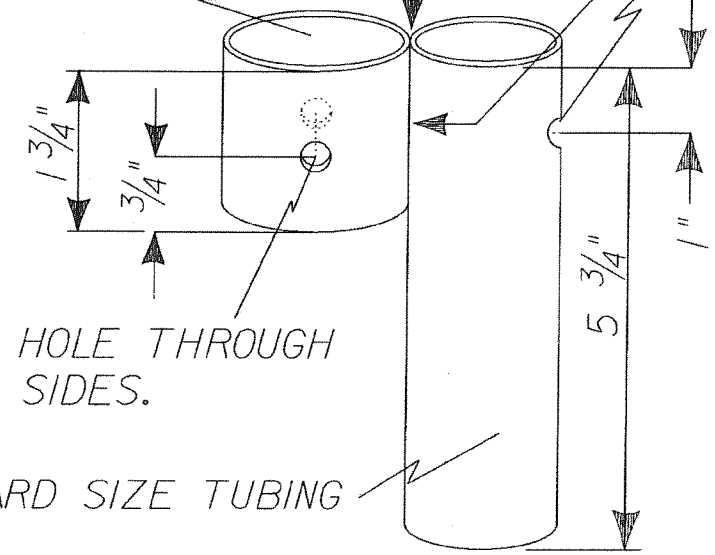

3/8" BOLT HOLE THROUGH BOTH SIDES.

1 1/2" ID STANDARD SIZE TUBING

BOTH PIECES SHALL BE MADE OF HIGH QUALITY GALVANIZED STEEL.

CANDLESTICK ADAPTER FOR BREAKAWAY SYSTEM

CITY OF LINCOLN, NEBRASKA
DEPARTMENT OF TRANSPORTATION
TRAFFIC ENGINEERING DIVISION

DATE	7-10-08	SCALE	NONE	
NO. SHEETS	1	DRAWN	DLS	SHEET NO. 1
candlestick.dgn		DRAWING No.	1	

GALVANIZED STEEL

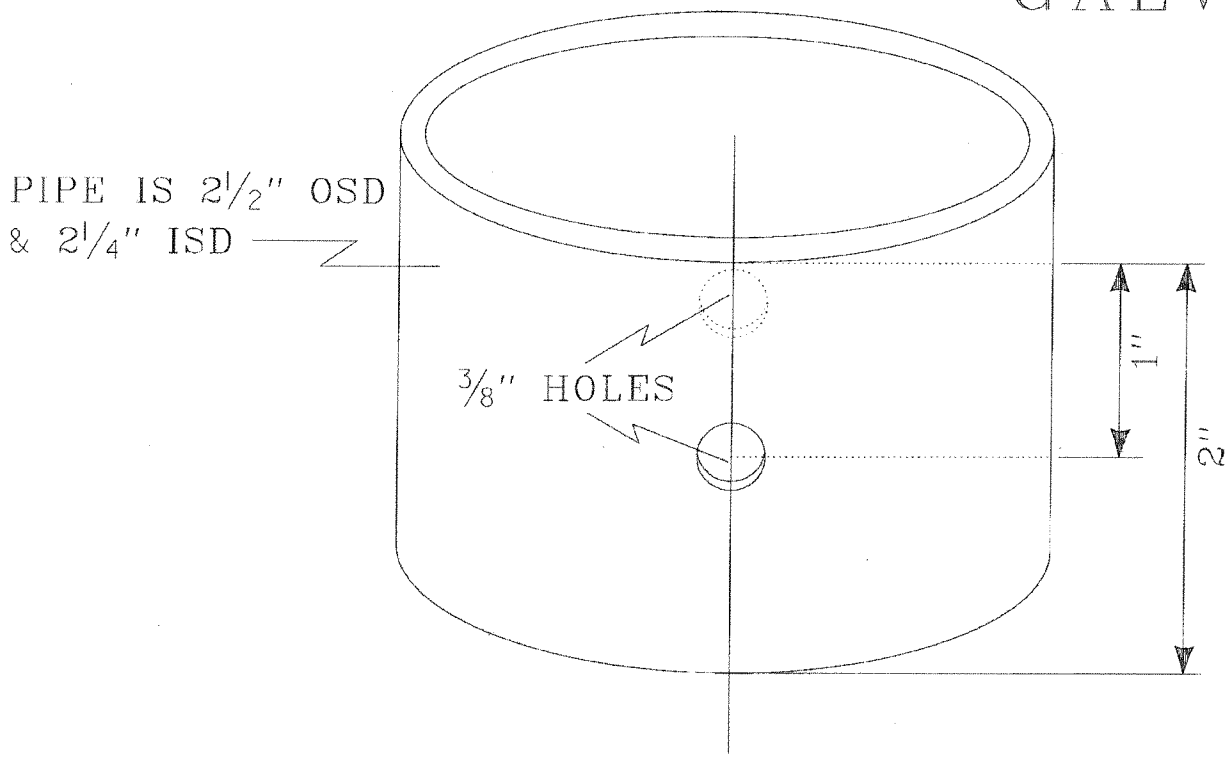

CANDLESTICK TO
CHANNEL POST ADAPTER

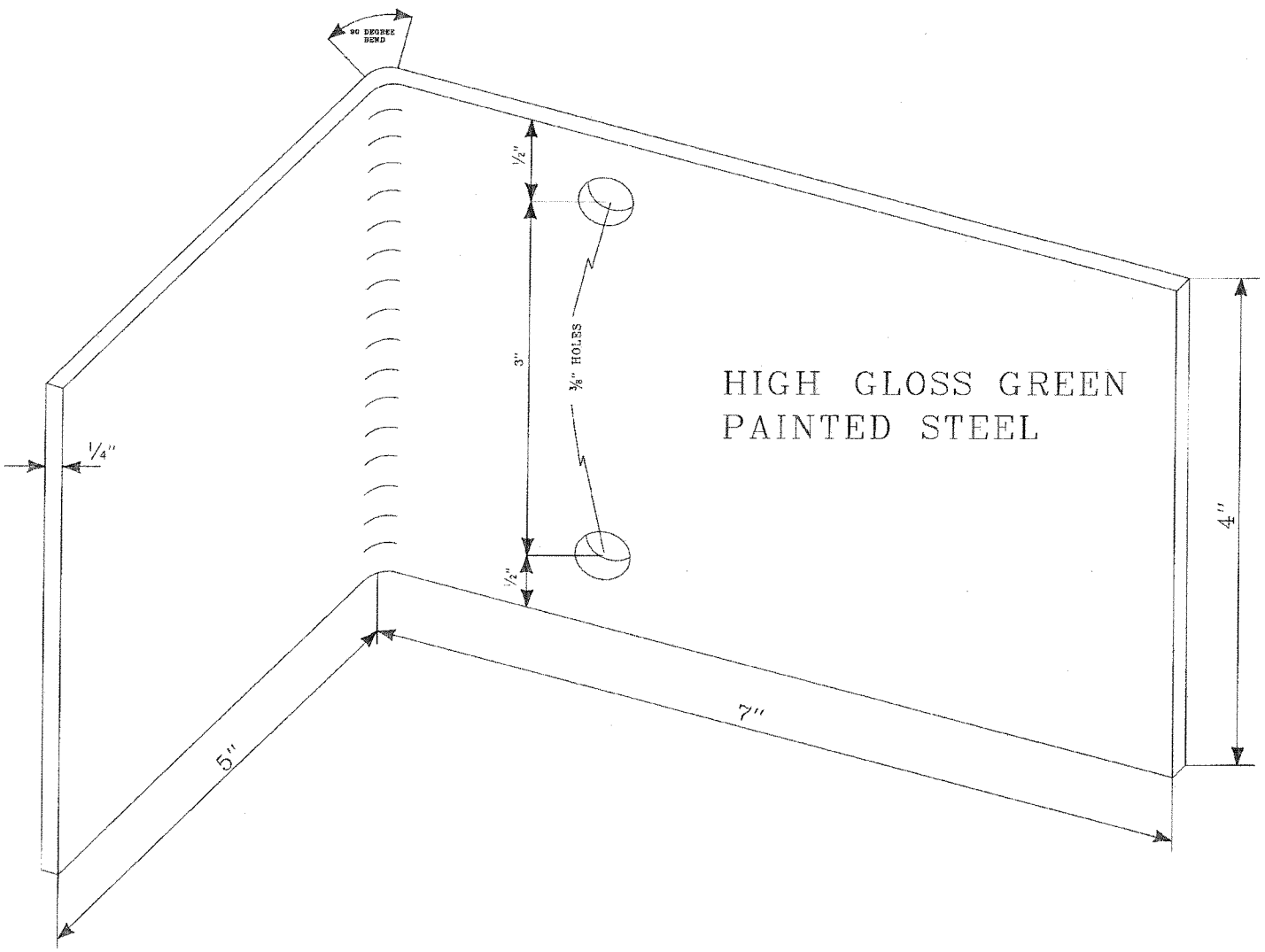

CHANNEL POST
STABILZER

THE STEEL PIPE USED IN ALL STREET NAME POSTS WILL HAVE AN ID OF 2" AND OD OF 2⅜".

ALL STREET NAME POSTS WILL BE PAINTED WITH A HIGH QUALITY GLOSS BLACK PAINT.

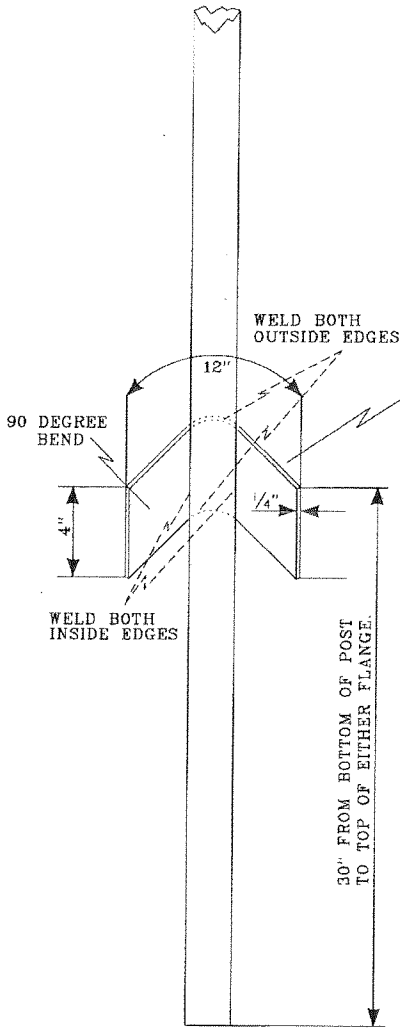

THIS SMALLER FLANGE SHALL BE USED ON ALL 10', 12', AND 13' POSTS.

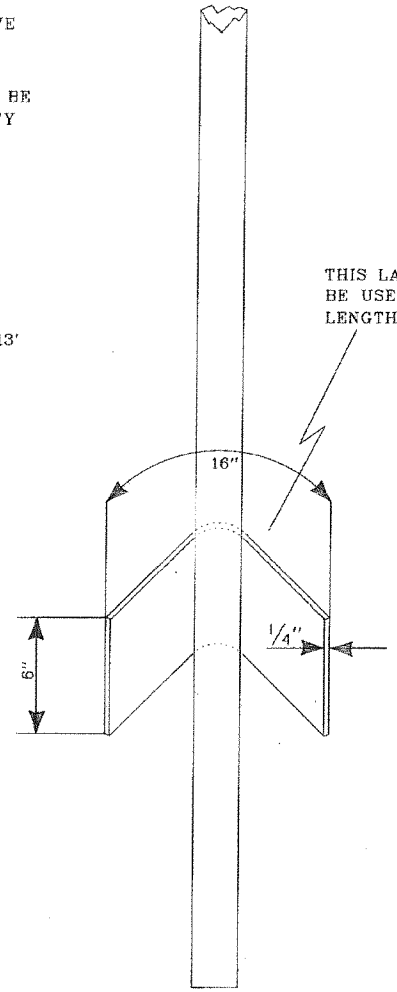

THIS LARGER FLANGE SHALL BE USED ON ALL 14' AND 15' LENGTH STREET NAME POSTS.

STREET NAME POSTS