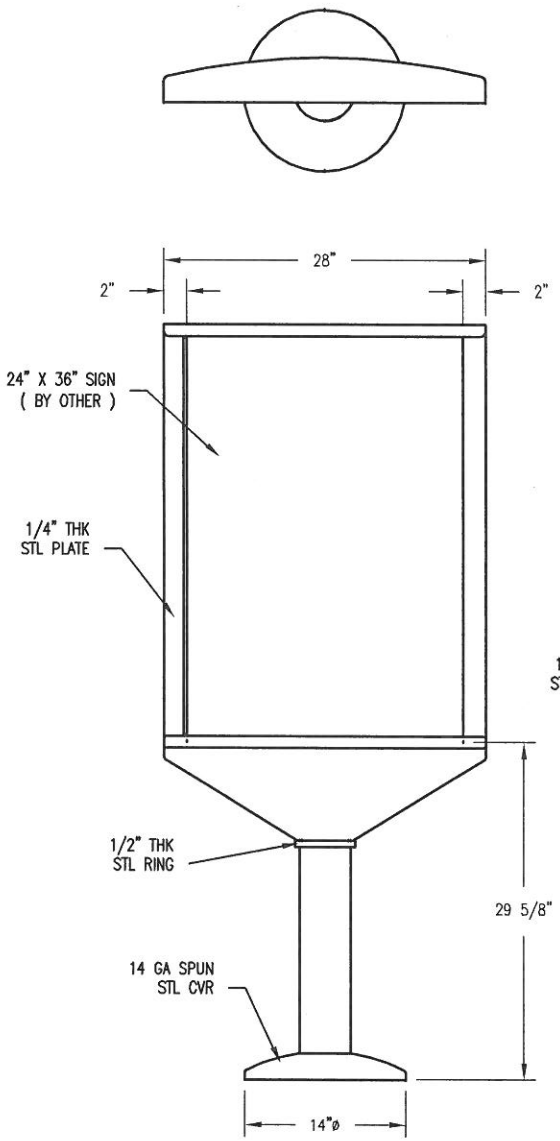

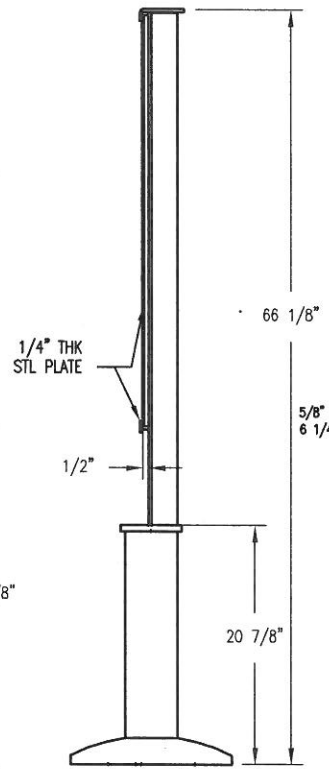

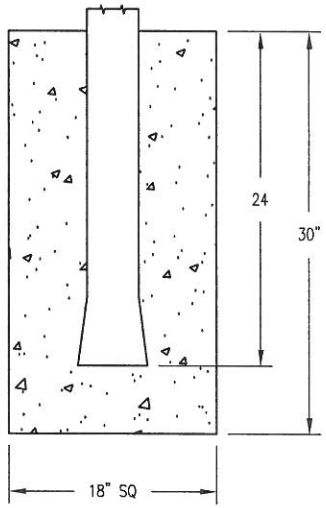

☐ S-1 EMBEDED

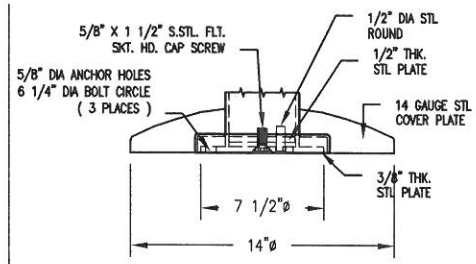

☐ S-2 SURFACE MOUNT

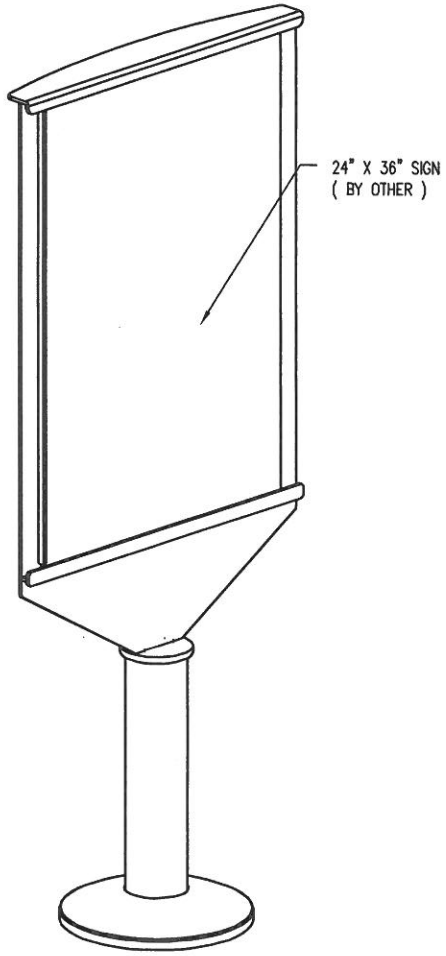

NOTES

1.) ALL STL. MEMBERS COATED W/ ZINC RICH EPOXY THEN FINISHED W/ POLYESTER POWDER COATING.
2.) 1/2" X 3 3/4" EXPANSION ANCHOR BOLTS PROVIDED FOR S-2 OPTION.

DuMor, inc.
P.O. Box 142 Mifflintown, PA 17059-0142

DATE DRAWN : 08/23/12	TITLE	SIGN FRAME	
DRAWN BY : RDH			
DATE REV. :	REVISION A	DRAWING NUMBER	68-591
REV. BY :			

1700 block of 12th St NW, WDC

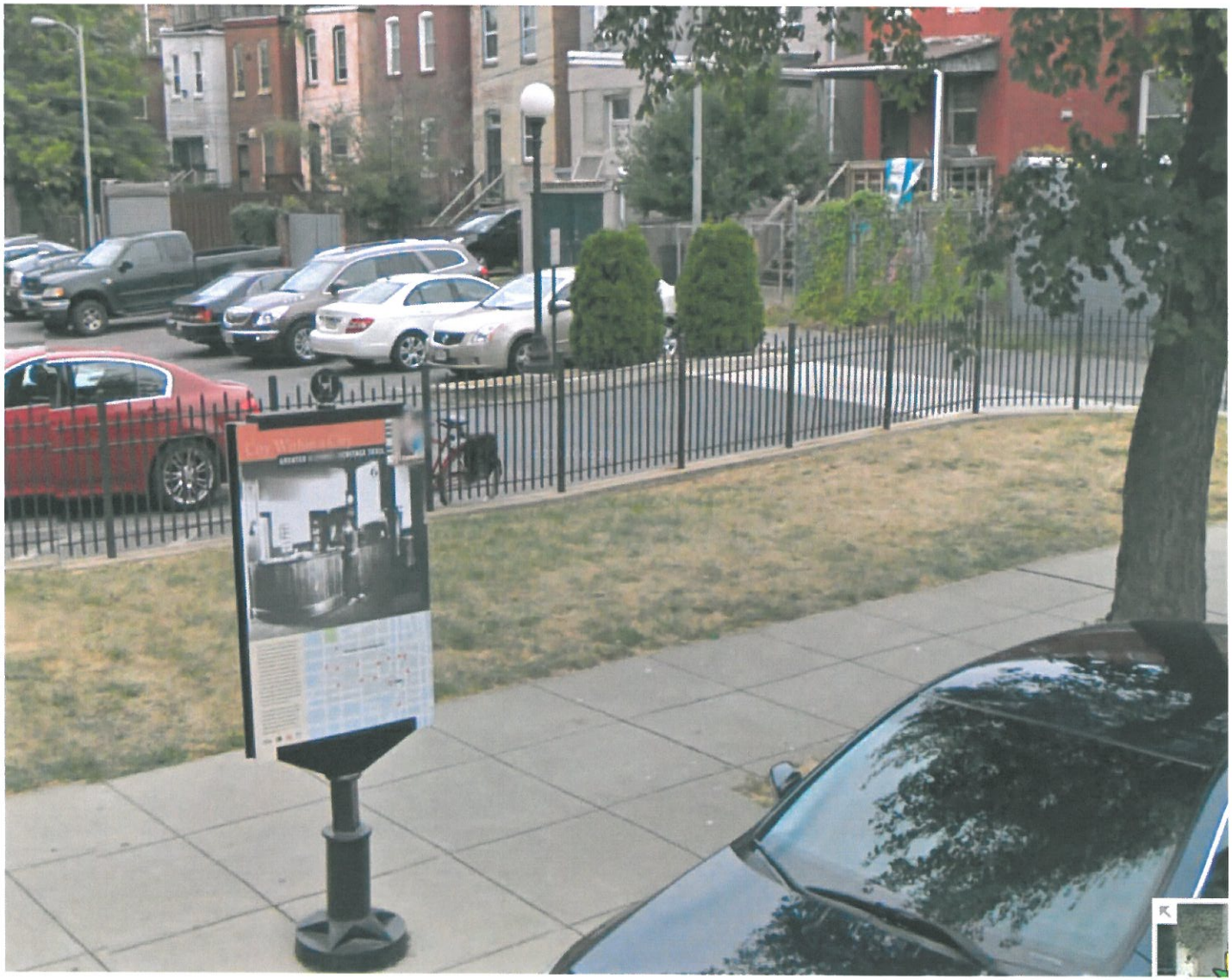

Outside Bohemian Caverns (11th & U St NW, WDC)

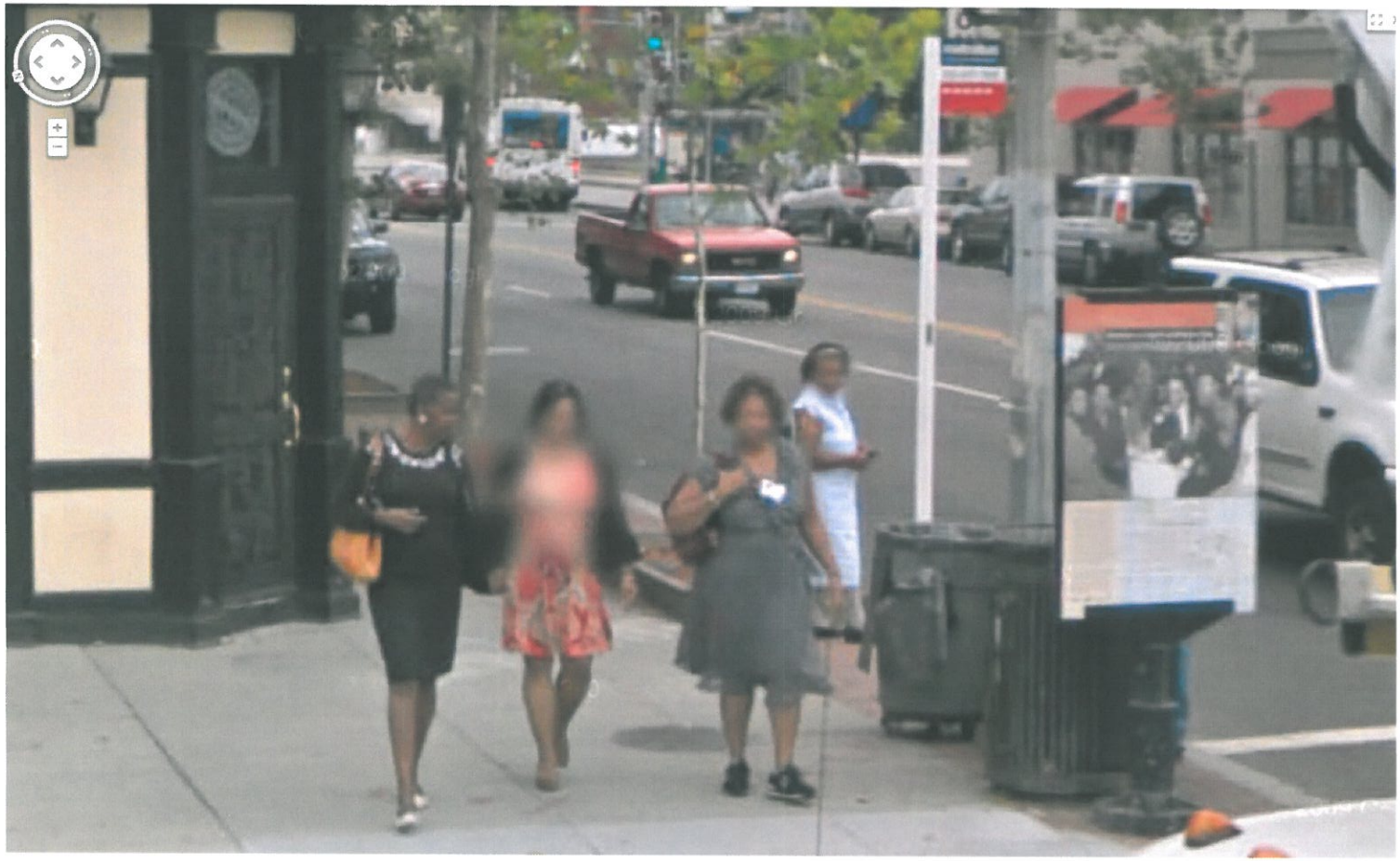

EVERETT LIST FOR HISTORIC Signage:

- *939 & 949 S. 11th (brick apts.)
- *business area at 11th & B
- *920 D St. (aka Colonel Mustard

- FM Hall - 1039 S.11

  Abbotts - 1045 D

  EDC - 1021 D

  Schneider/col. Mustard - 1045D

  Osborne - 1029 E

  Quinn Chapel - 1225 S. 9th

  F St. Rec (old firebarn) - 901 S. 13

  1st Baptist Church - 1205 F

  Ponce de Leon - 1000 E

  Bahr Terrace - 627 S. 11

  Francine - 1111 H

  La Belle - 740 S. 11

  Everett School - 1123 C

  Bill Woods House - ?? 800 D

  Cooper Park