Lincoln Water System

Welcome
Utility Project Contractors

Presenters

Nick McElvain, PE – Operations Support Manager

Steve Owen, PE – Water Distribution Manager

Agenda

- Overview of LWS
- Why do we do it this way?
- Water Construction Check List
- Water Construction Issues
- Water Construction Standards

Construction Enhancement

- Purpose is ---
  - To get the best quality project, with
  - The longest life expectancy,
  - Least disruption to our customers &
  - At a reasonable cost.

Pressure Districts

- Ground Elevations from Lowest to Highest is Almost 300 Feet – 1150 to 1440
- 100 Feet of Water Depth is 43 PSI Pressure

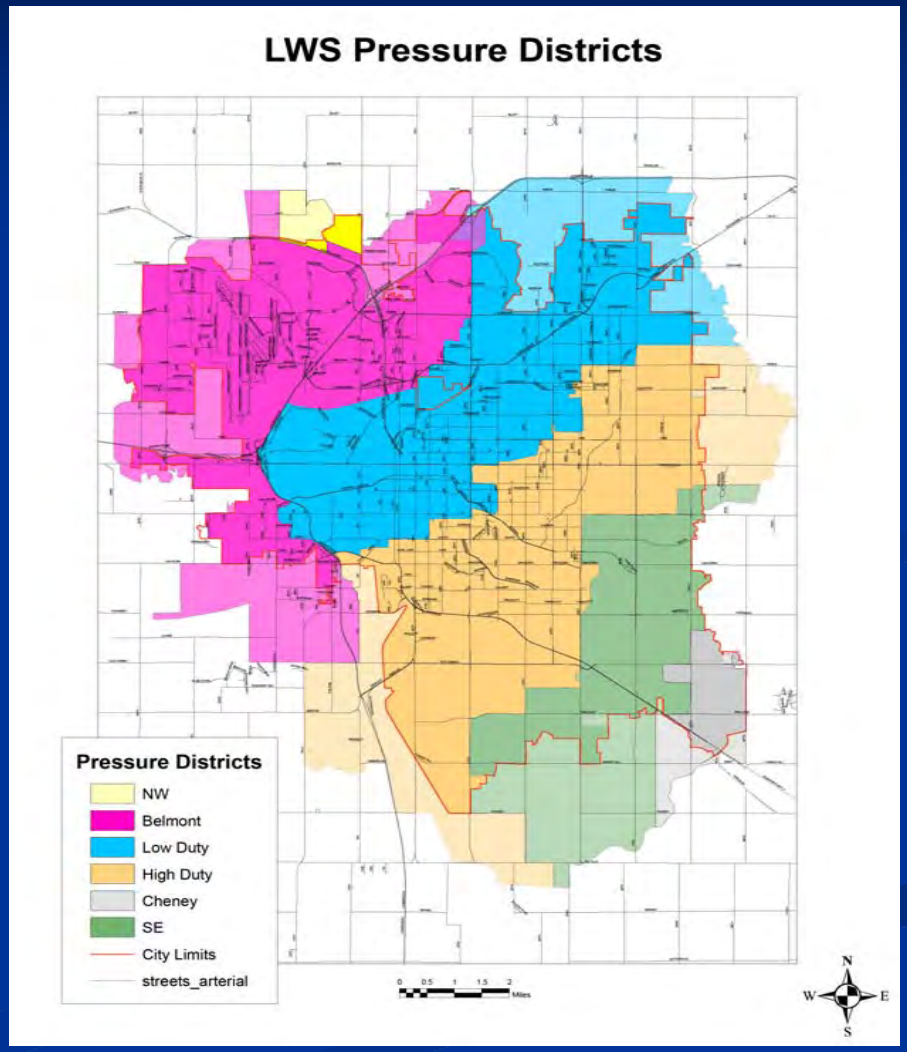

Hydraulic Gradient

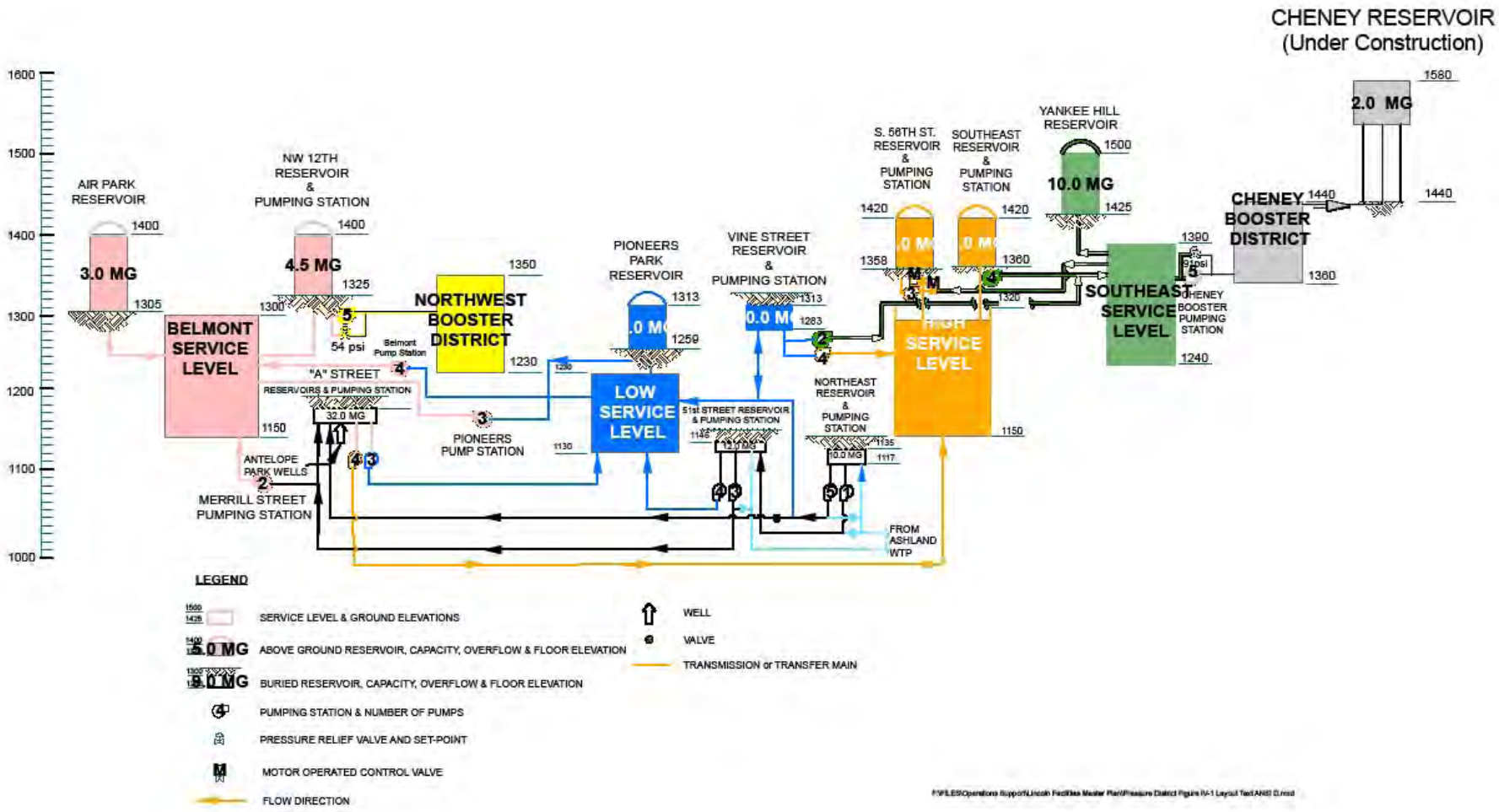

Types of Water Distribution Projects

- Water Mains to Provide a Distribution Grid Serve New Growth Areas of the Community
- Distribution Mains to Provide Additional Capacity to Existing Areas of the Community
- Replacement Mains to Replace Mains That Have Served Their Useful Life
- EO s - Local Water Mains Funded by the Developer to Serve New Subdivisions

Why Do We Do It That Way?

- Thrust Restraint – to resist blowing the pipes apart under operating & test pressures
  - 6” plug – over 5,000 pounds of force
  - 12” plug – over 21,000 pounds
  - 24” plug – over 86,000 pounds

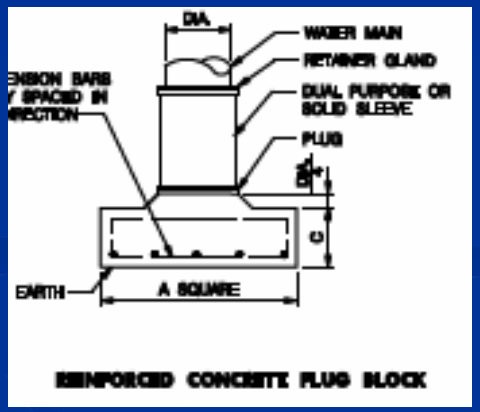

  - Requires blocking against undisturbed soil, and/or
  - Restrained Joint Pipe – using friction, i.e. the pipe/soil interaction to restrain

Why Do We Do It That Way?

- Flushing and Disinfection
  - Remove any potential contamination from the main – 5 feet per second desired velocity, no less than 2.5 fps.
  - Kill any bacteria not removed by flushing
  - Sample to determine if any bacteria survived disinfection

  - Would you be willing to eat your dinner if it was served to you on a plate that was as clean as the inside of the pipe you just built?

Why Do We Do It That Way?

- Water Service Inspections
  - Inspection by Project Inspector to determine if it meets contract requirements and for measurement and payment
  - Inspection by LWS Staff to get measurements and entered into database, so that we have records to locate and manage each customer's connection for the next 100 years

Why Do We Do It That Way?

- Corrosion Protection Systems
  - Usually on lager diameter pipe – 24” and greater
  - Usually on Ductile Iron or Steel Pipe
  - Wires connected from Pipe to Sacrificial Anodes
  - Protects metal parts of pipe exposed to soil
  - Requires isolation from other segments of pipe
  - Necessary to repair damaged wires and keep isolation joints isolated

Who To Contact at LWS

- Steve Owen – Distribution Manager
  - Replacement Projects, Service Connection Issues
- Bill Fish – Assistant Superintendent Construction
  - Shut downs, TS&Vs, Disinfection
- Lonnie Rech – Assistant Superintendent Service
  - Service Inspections, New and Replacement Taps
- Nick McElvain – Operations Support Manager
  - CIP Project Manager & Funding

Major Repairs

Location	Pipe Size	Age	Cost	Cause of Failure	Description
63rd & Pine Lake Road	24"	1998 10 years	$49,000 Con	[illegible]	Pipe had to be removed from casing in the bottom of a creek crossing requiring the use of a private contractor. While the repair [illegible]t in an interruption of water service, having the water [illegible] service could have seriously affected water supply in [illegible]ncoln during hot weather, high demand or a large fire
84th and Cuthills Drive	24"	1982 26 years	$36,000 Contractor	Corrosion failure of blow off fitting. Fitting was not properly abandoned or poly wrapped during a street widening project.	Water main was too deep for LWS crews and equipment require use of private contractor. 84th Street was reduced to one lane in this area for approximately one week. While the repair did not result in an interruption of water service, having the water main out of service could have seriously affected water supply in southeast Lincoln during hot weather, high demand or a large fire event
12th and Q Street	12"	1994 14 years	$7,400 Contractor	Corrosion of 3" water service fittings and settlement of tap valve due to inadequate blocking.	The water service to 1217 Q Street failed causing extensive damage to Q Street and interruption of water service to several dining establishments and a large telemarketing firm. Businesses that had been previously interrupted prior to water main being replaced in 1994 were again disrupted in 2008.
611 North 27th Street	8"	2004 5 years	$7,500 (est.) City	Three failures have occurred on this water main since construction in 2004. Two services have broken and a fitting has leaked.	The first service failed within the warranty period and the contractor fixed it under protest. The more recent failures have been fixed by private contractor and the LWS crews. Service to shopping mall was disrupted on several occasions.
86th and Pioneers	16"	2002 6year	Unknown $0 - $50,000	LWS crews discovered that polywrap was missing around a pipe joint when installing a valve.	The extent of other defects is currently unknown on this project but the condition that was observed may be an indicator of more problems. Unwrapped joints will cause corrosion to occur rapidly in these areas. Failures could begin occurring with 20 years. Same contactor also constructed a 24" pipe in 84th Street which could have the same defects. Investigative and corrective actions could be very expensive if City elects to pursue.
14th & Garfield	6"	2005 4 years	$10,000 City	Fitting was improperly blocked and separated causing damage to paving	Contractor has refused to settle payment on this failure. Some additional paving still needs replaced.
98th & Holdrege	16"	2007 2 years	No cost	Fitting was improperly blocked and separated	Slight property damage with no claims. Contractor fixed problem
NW 34th and West Luke	8"	2009	No Cost	[illegible]	[illegible]uncan aviation. LWS crews made the [illegible]ement
NW12th & West Alvo Rd	30"	N/A	$16,000	[illegible] was disturbed by a contractor causing a very large leak, pressure loss and less than desirable fire protection for approximately 3 weeks.	[illegible]ontractor working too close to a large [illegible]ted in the area of construction. This is an example of where additional field inspection oversight may have prevented the incident.
Total Approx Range of Cost		$125,000 – $175,000			

Average Age = 8.5 Years

Repair Costs = $125,000 +

2

Construction Phase Scope of Services

Construction Phase Services
Lincoln Water System
Distribution Water Main Construction Projects

1. Purpose:

   To maximize water utility service life, provide technical interpretation to contractors, ensure compliance with plans and specifications and provide specific expertise related to the construction of PWU water utility.

2. General:
   - 2.1. Services pertain to EO and replacement water main construction projects ranging in pipe sizes of six (6) – sixteen (16) inch diameters.
   - 2.2. Experience in underground utility construction using open cut and boring methods
   - 2.3. Experience in ductile iron and PVC water pipe construction and design
   - 2.4. Scope includes on-site observation and normal and customary project management services

3. Plan Review Services:
   - 3.1. Provide plan reviews with expertise in the operability of the water distribution system including valve placements, hydrant placement and spacing, customer water services, flushing and disinfection, etc.

4. Pre-construction Services:
   - 4.1. Issue formal notice to proceed documentation.
   - 4.2. Conduct pre-construction meetings with prepared agendas and use of the appropriate construction check list.
   - 4.3. Verify contractor certification for on site personnel.
   - 4.4. Distribute project information to abutting properties
   - 4.5. Mail water service reconstruction information to property owners.

5. On-site Observation
   - 5.1. Minimum overall on-sight observation of 50%.
   - 5.2. 100% inspection of all fittings and appurtences for proper assembly and thrust restraint in accordance to manufacturer's recommendations and contract documents.
   - 5.3. 100% inspection of all poly encasement for pipe and fittings before and after installation in accordance to DIPRA standards.
   - 5.4. Ensure plan profiles are observed and conduct consultation with owner regarding deviations.
   - 5.5. Ensure thrust blocking, anchorage and restraint is provided where necessary.
   - 5.6. Observe and document all necessary field modifications when encountering lead joint construction on existing pipe lines, or other project changes.
   - 5.7. Consultation with owner regarding alignment changes, utility conflicts, change authorizations and change orders.
   - 5.8. Ensure valves and hydrants are installed to proper grades, orientation and plumb.
   - 5.9. Ensure poly wrap is installed in accordance to DIPRA standards for ductile iron pipe
   - 5.10. Consult with LWS regarding anticipated customer outages especially with critical water customers.
   - 5.11. Inform and check off with Utility Manager regarding field modifications prior to authorization of work
   - 5.12. Conduct pre-construction and progress meetings using agreed on agenda format.
   - 5.13. Participate in contractor lead progress meetings using agreed on agenda format.
   - 5.14. Conduct project walk through with owner and contractor to determine and document substantial completion.
   - 5.15. Review and forward pay estimates.

6. Post Project Completion:
   - 6.1. Utilize appropriate construction check list to verify compliance with contract documents.
   - 6.2. Document "punch list" items and follow-up on resolution of deficiencies prior to authorizing final payment.
   - 6.3. Prepare necessary correspondence to contractor related to punch list and project completion.
   - 6.4. Provide project debriefings as requested by owner.
   - 6.5. Provide timely project close out documentation.

7. Deliverables
   - 7.1. Pre-construction meeting minutes published to electronic project file
   - 7.2. Ensure submittal and distribution of contractor progress meeting minutes
   - 7.3. Daily field notes on project
   - 7.4. Notice to proceed
   - 7.5. Notice of pending liquidated damages, if applicable.
   - 7.6. Pressure testing records and bacteriological testing records published to electronic project file
   - 7.7. Prepare and maintain project completion punch list items and associated correspondence.
   - 7.8. Certification of substantial and final completion.
   - 7.9. Provide as-built drawings.

DRAFT

Water Main Construction Checklist

- Water Mains
- Fittings
- Hydrants
- Valves
- Loops
- Shutdowns
- Water Services
- Testing & Disinfection
- Tapping Sleeves & Valves

Water Construction Issues

- Tracer wire installation, termination, testing
- Compaction around valve boxes
- Retainer gland installation
- Hydrant drain material
- Hydrant orientation
- PVC pipe over-insertion

Water Construction Issues

- Pressure testing hydrant branch piping
- Flushing and disinfection, velocity and discharge
- Polyethylene encasement
- Tap excavations & compaction in ROW
- Record drawings

Water Construction Standards

- Special Provisions
- Standard Plans
- Standard Specifications
- Manufacturer's Instructions
- AWWA:
  - C105 – Polyethylene Encasement
  - C110 – Iron Fittings
  - C600 - Ductile Iron Pipe Installation
  - C605 - PVC Pipe Installation
  - C900 & 905 - PVC Pipe Materials
  - C651 – Flushing and Disinfection
- Ductile Iron Pipe Research Association
- Uni-Bell PVC Pipe Association