ADA Training

Federal Highway Administration

PART 3 – Construction

11-18-2010

Presented by:
Jason Giard, PE – Operations Engineer
Federal Highway Administration – Idaho Division

Construction Methods

- NDOR Standard Specifications
- 108.04 – Limitation of Operations says “The Contractor shall employ sufficient labor and equipment for completing all work required by the contract.” Also see section 104 – Scope of Work
- If the plans do not provide enough detail to construct a handicap ramp, a design should be prepared that meets standards, or **gets an approved exception to standards**.

Not all “standard” or “typical” methods for ramp construction will result in a ramp that meets ADA requirements.

Construction Practices

- Old Way
  - Diagonal Ramp straight-lined from back of sidewalk to flow line
- New Way
  - Constructing ramps with correct slopes and landings
  - Use appropriate ramp type

Construction Practices

- Old Way
  - Install a 5’6” min length ramp without regard to slopes
- New Way
  - Lengthen ramps (up to 15’) to keep the running slope below 8.3% max. slope

Construction Practices

- Old Way
  - Rounding or contouring the ramp
- New Way
  - Neat and distinct grade break lines

Construction Practices

- Old Way
  - Constructing a lip at the bottom to aid drainage

- New Way
  - No lips

Construction Practices

- Old Way
  - Inlets located at the bottom of the ramp
- New Way
  - Inlet moved away from the ramp area
  - Ramps built around existing inlets

Construction Practices

- Old Way
  - No access to pushbuttons from landing area

- New Way
  - Pushbuttons must be accessible from a flat landing

Construction Practices

- Old Way
  - Gutter counter slope too steep

- New Way
  - Gutter pan constructed at flatter than 5%

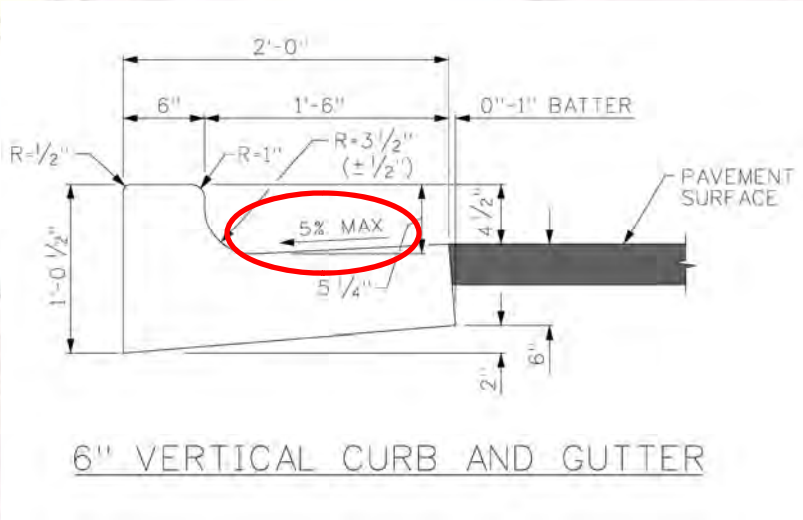

Construction Practices

- Old Way
  - Gutter flow line at ramp too steep.
  - Creates steep cross slope for pedestrians
- New Way
  - Warp flow line to provide 2% maximum cross slope

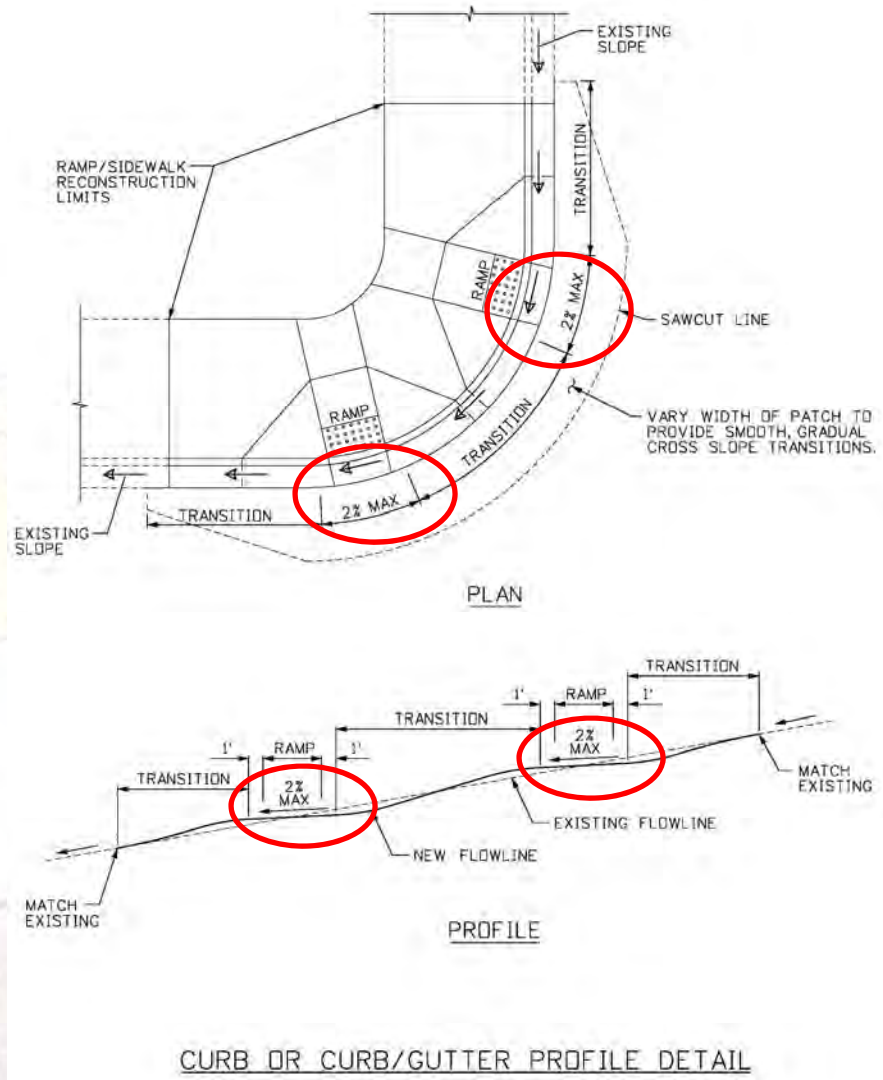

Construction Practices

- Old Way
  - Non-perpendicular grade breaks

Old Way

New Way

- New Way
  - Perpendicular grade break with flat triangular piece at the bottom

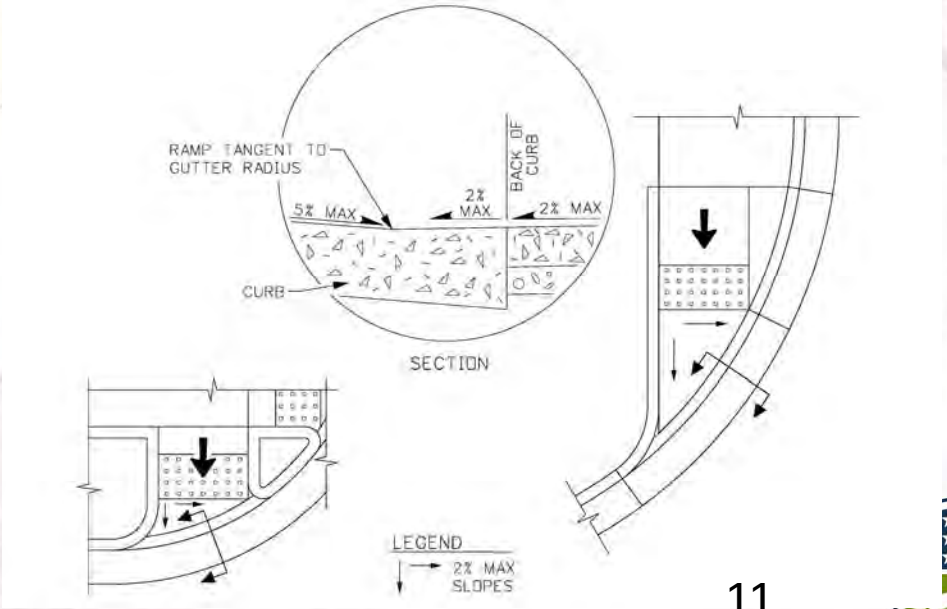

Construction Practices

- Old Way
  - Crosswalks without clear space

- New Way
  - Use this style (single diagonal) as a last resort
  - 4’ by 4’ minimum clear space within crosswalk at bottom of ramp

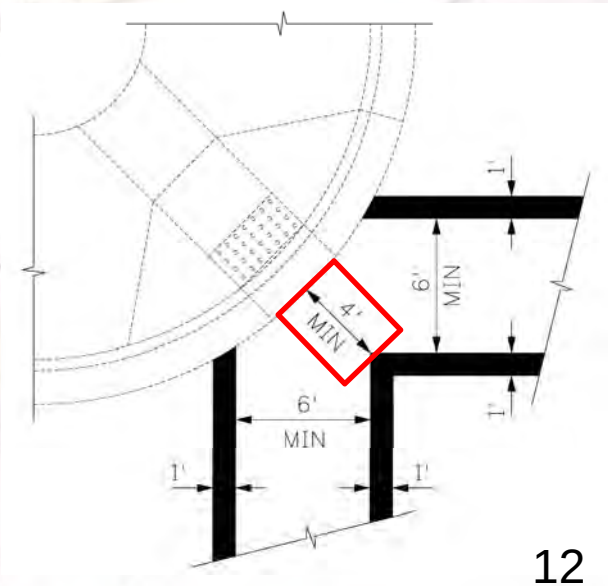

Construction Tolerances

- Again: ADA requirements are given in Absolute Maximums and Minimums!
- To meet ADA and Contract requirements you must:
  - Be intimately familiar with ADA requirements. Know what the end result needs to be before you start.
  - Account for construction tolerances in your construction methods. You could aim for a lesser slope when a maximum is required or build a slightly larger landing.

Drainage Issues

- Curb and gutter flow line slope minimum 0.2%
- Use combination ramps wherever possible
- In new construction place inlets to avoid flooding ramps

Utilities

- Utility locations must be dealt with up front and in the plans.
- Must meets ADA requirements around existing utilities.
  - Clear spaces around obstructions
  - Junction boxes and water meters flush

Utilities

- When observed, relocation of J-boxes * may be necessary
  - An electrician may be required

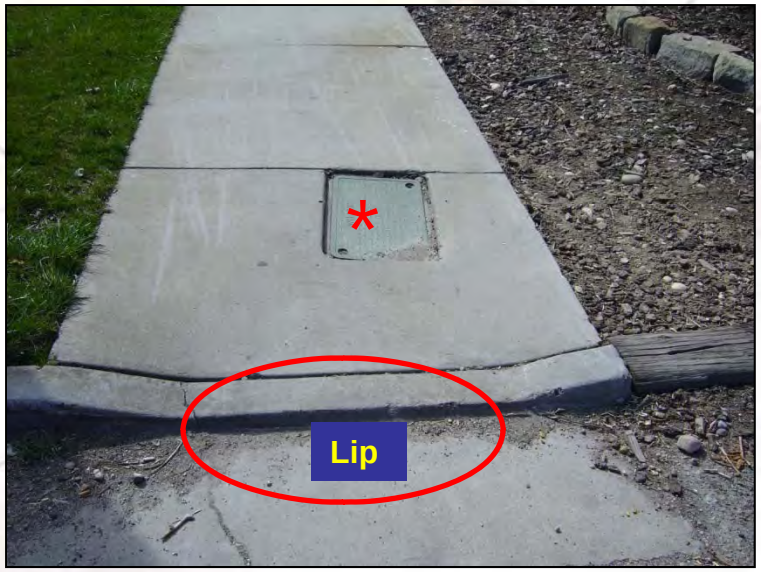

Right-of-Way

- Old Way

No right-of-way data is provided in contract documents

- New Way

Plans were developed with right-of-way restrictions in mind

Obstructions

Requires 36” sidewalk width if obstruction is less than 24” wide

Obstructions

Sidewalk widened around pole

Pedestrian Pushbuttons

- Access to pedestrian pushbutton must be provided (flat landing)
  - If necessary enlarge landing area or move pedestrian pushbuttons so that pushbuttons are accessible from landing area

Pedestrian Pushbuttons

- If a pedestrian pushbutton is moved on the pole, the old hole must be plugged
- An electrician may be required to move pedestrian pushbuttons

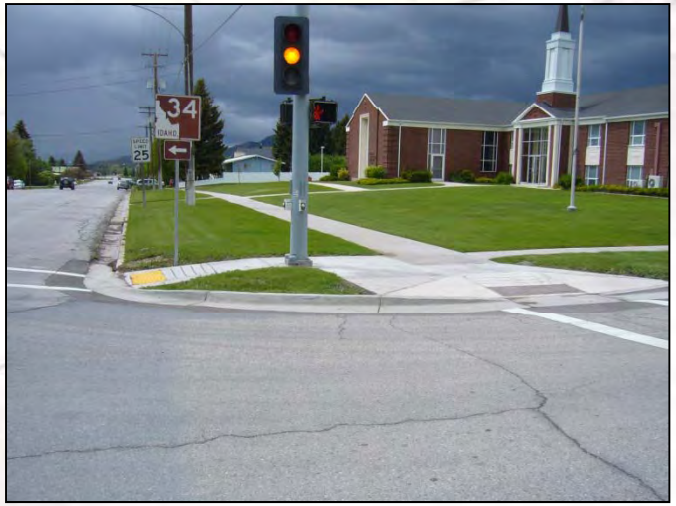

Pedestrian Pushbuttons

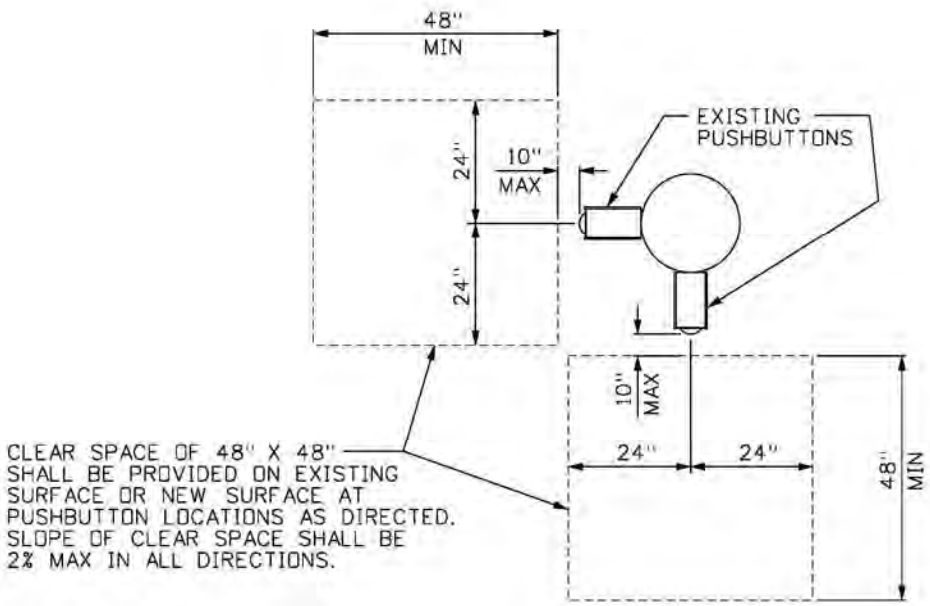

CLEAR SPACE PLAN

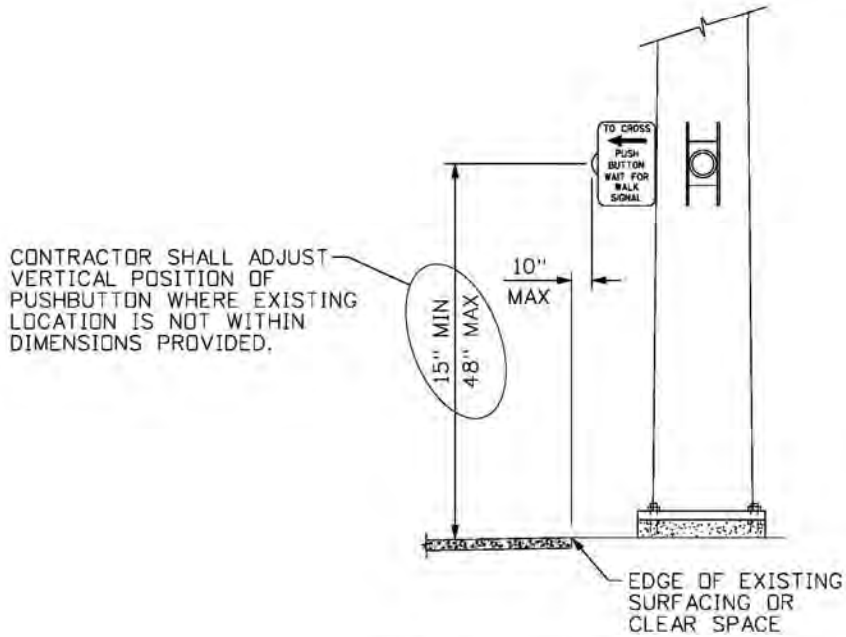

CLEAR SPACE ELEVATION

This is not acceptable

The Cross Slope is too steep

Maximum Cross slope is to be 2%

Poor design that did not leave a clear, flat 4-foot pedestrian zone

Existing Sidewalk is 60 inches wide
47.5 Inches
SPEED LIMIT 25
SPEED LIMIT 25

In Caldwell
Minimum width for handicap ramp is 48 Inches

In Caldwell
Requires a 48” X 48” flat landing or move the push buttons
No Access to the pedestrian push buttons for Wheel Chairs

In Payette
This stop sign should have been moved when the ramp was reconstructed

Plans showed to install a new ramp at this location
Ramp, sidewalk, and landscaping needs to be designed
Do not build something that does not meet standards
Get Help

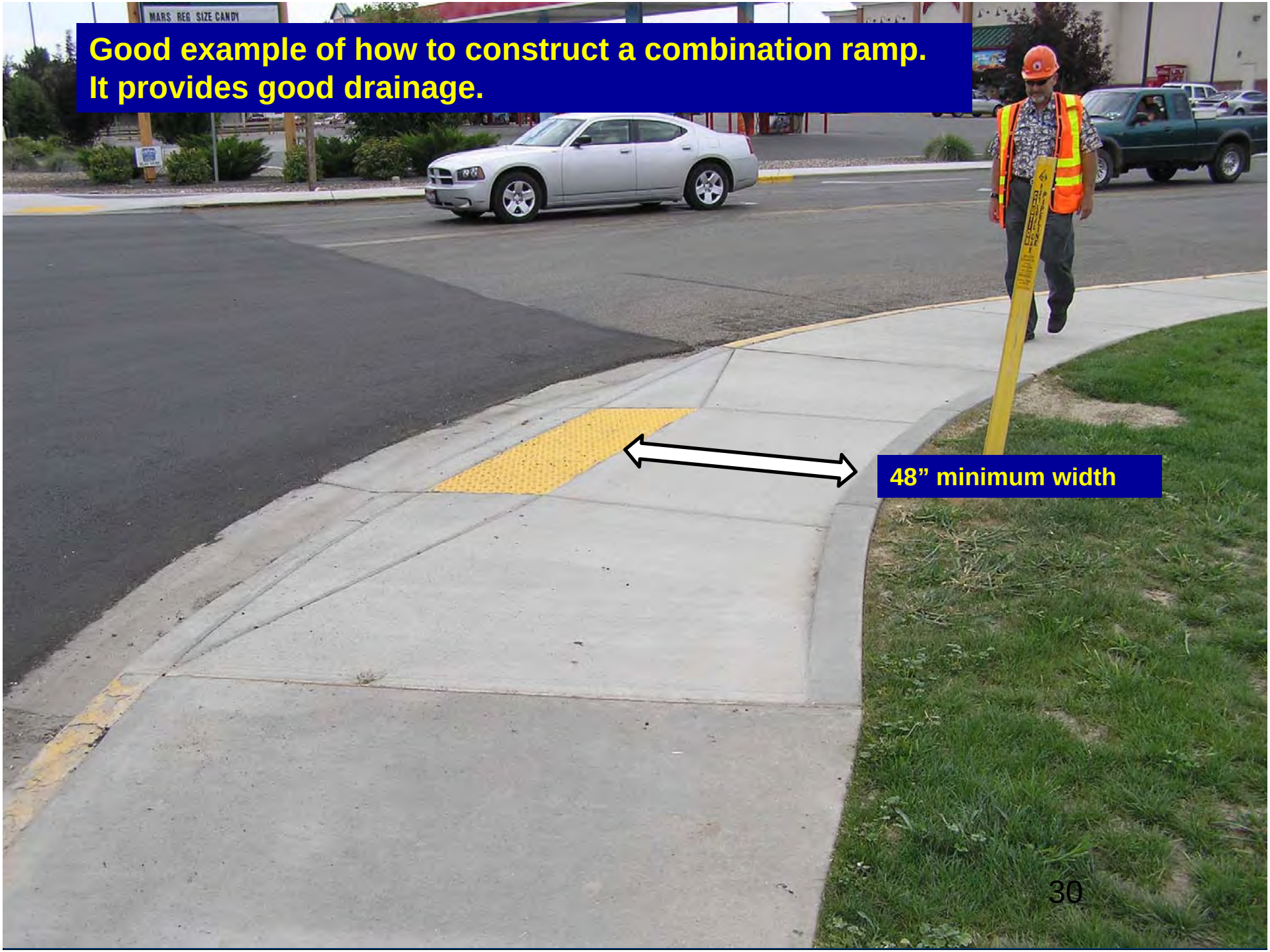
MARS REG SIZE CANDY
Good example of how to construct a combination ramp.
It provides good drainage.
48” minimum width

1. Good use of curb radius
2. Poor planning on width of ramp
3. Truncated dome must cover full width of ramp
   (ITD says within 1.5”)
4. Cutting pieces of domes may result in a maintenance issue

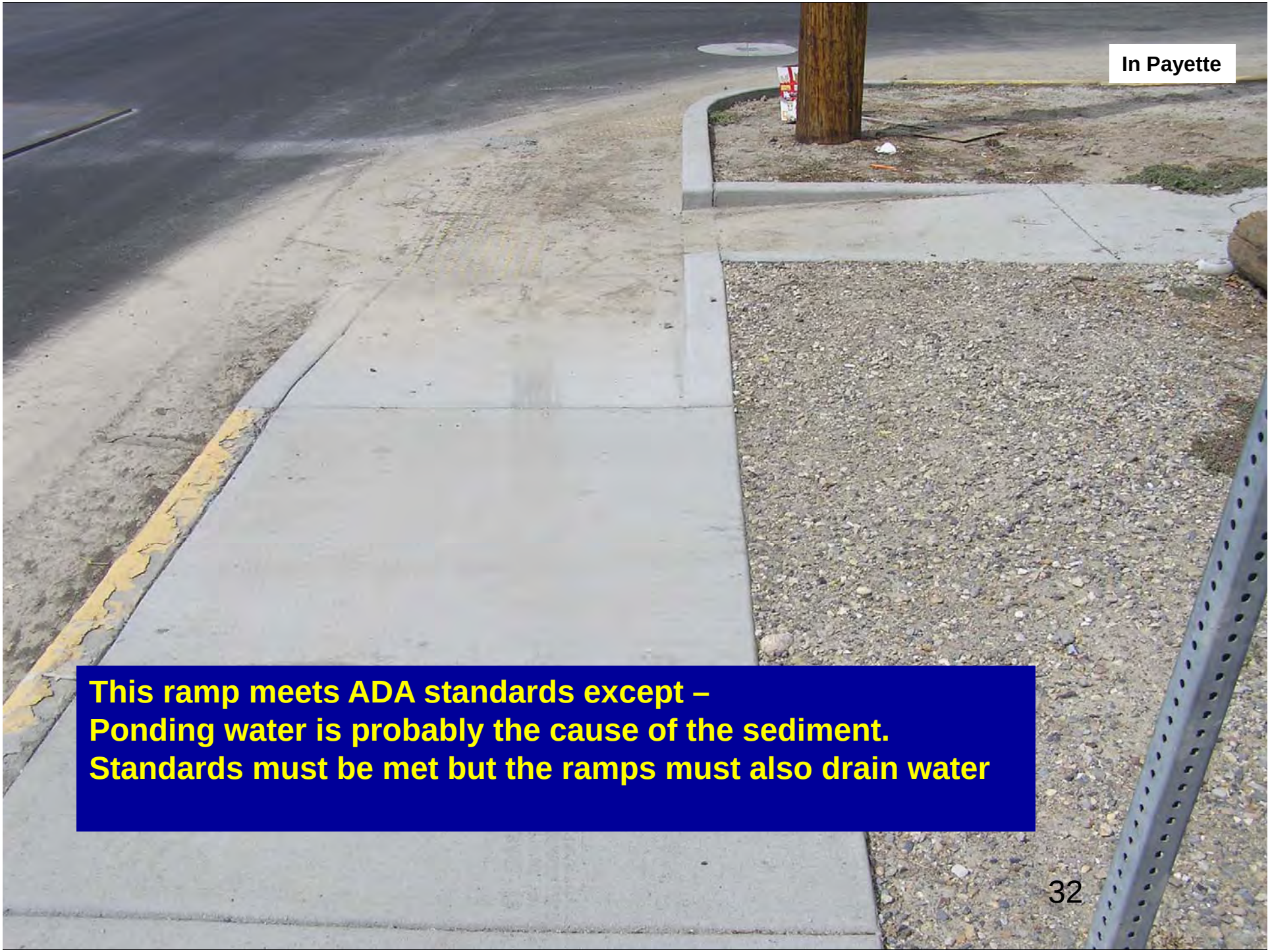

This ramp meets ADA standards except –
Ponding water is probably the cause of the sediment.
Standards must be met but the ramps must also drain water

This is not acceptable

1. Lip in curb was fixed by replacing curb
2. Ramp is not 48” wide
3. Ramp must be flat not rounded
4. All aspects of the ramp must be made ADA accessible

Truncated dome does not cover the entire width of the ramp

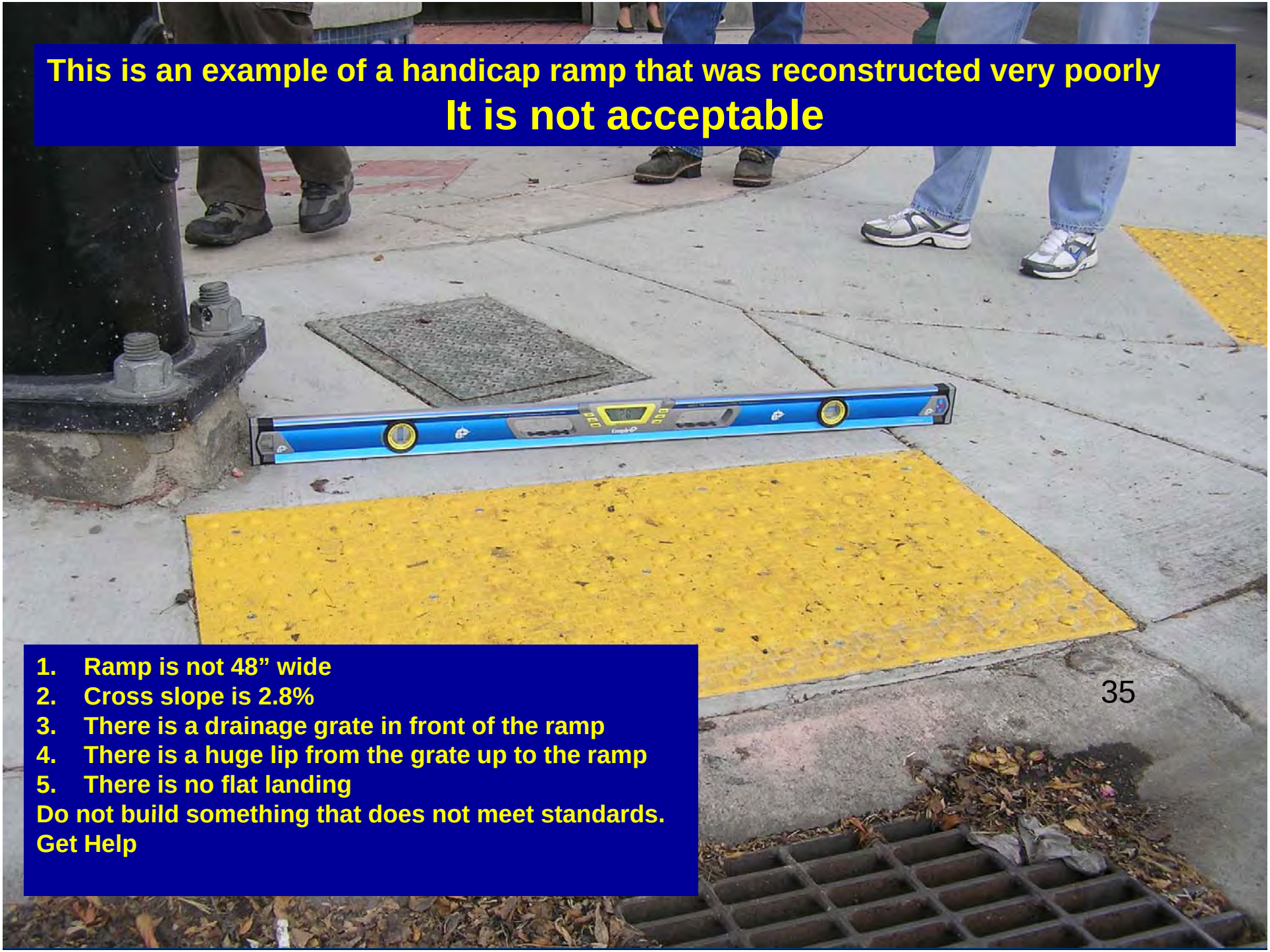

This is an example of a handicap ramp that was reconstructed very poorly

It is not acceptable

1. Ramp is not 48” wide
2. Cross slope is 2.8%
3. There is a drainage grate in front of the ramp
4. There is a huge lip from the grate up to the ramp
5. There is no flat landing

Do not build something that does not meet standards.
Get Help

END PART 3

Questions?

Thank You !

Jason Giard, PE
Operations Engineer
FHWA Idaho Division
3050 Lakeharbor Lane, Suite 126
Boise, ID 83703
(208) 334-9180 ext. 123
Jason.giard@dot.gov