PROJ: 7000228 OLD AS OF 070810.cfg
PEN: ...\tables\Pen\GW_PENTABLE.TBL
USER: sieczaw
DATE: 9/27/2011
DGN: ...\STANDARD\Current\lsp175.dgn



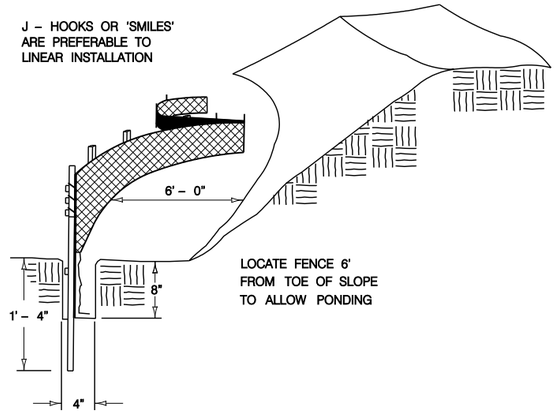


**TRENCHING METHOD**

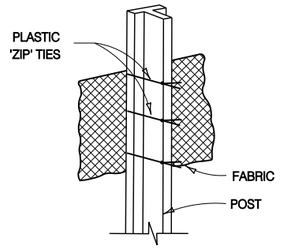


**T-POST WITH ATTACHMENT TO POST**

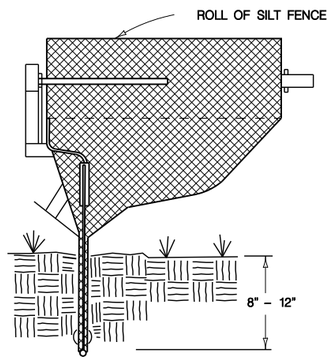


**STATIC SLICING METHOD BACK VIEW**

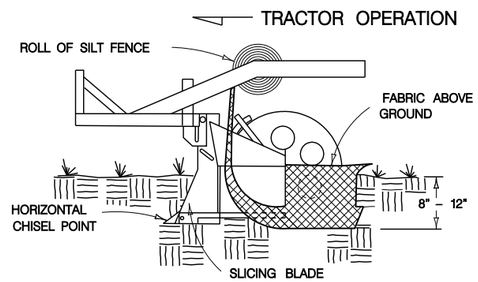


**STATIC SLICING METHOD SIDE VIEW**

**METHODS OF SILT FENCE INSTALLATION**

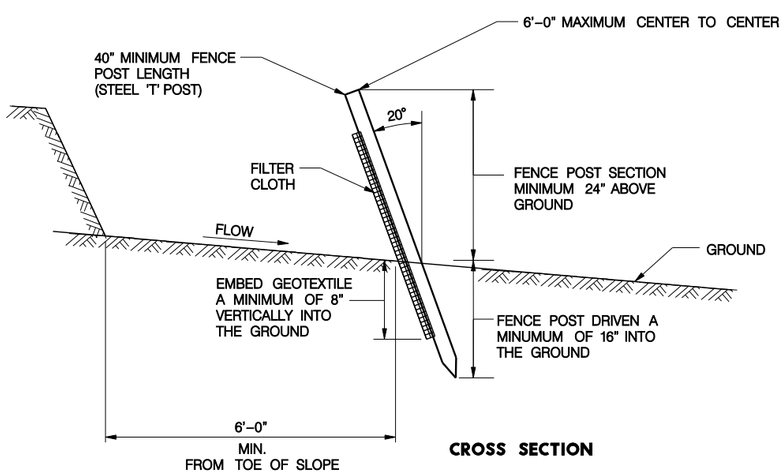


**CROSS SECTION**

## SILT FENCE PLACEMENT/ONE SLOPE

INSTALLATION WITH J–HOOKS OR ×SMILES' INCREASE SILT FENCE EFFICIENCY.

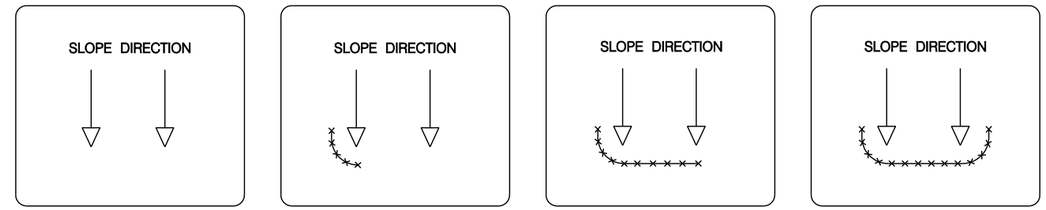


**STEP 1 - CONSTRUCT LEG** | **STEP 2 - CONSTRUCT DAM** | **STEP 3 - CONSTRUCT LEG 2**

## SILT FENCE PLACEMENT/TWO SLOPES

INSTALLATION WITH J–HOOKS WILL INCREASE SILT FENCE EFFICIENCY AND REDUCE EROSION–CAUSING FAILURES.

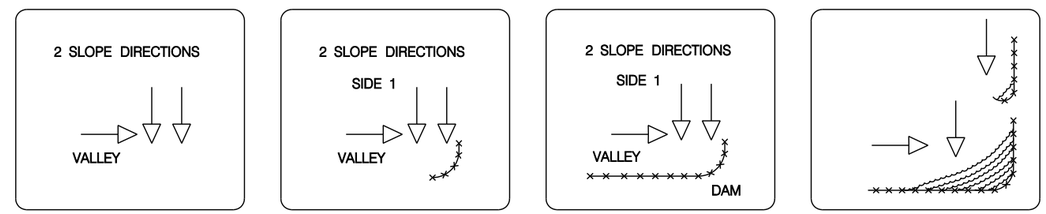


**STEP 1 - CONSTRUCT A DAM** | **STEP 2 - CONSTRUCT SIDE 2** | **STEP 3 - CONSTRUCT J-HOOKS AS NEEDED**

## SILT FENCE PLACEMENT/PERIMETER CONTROL

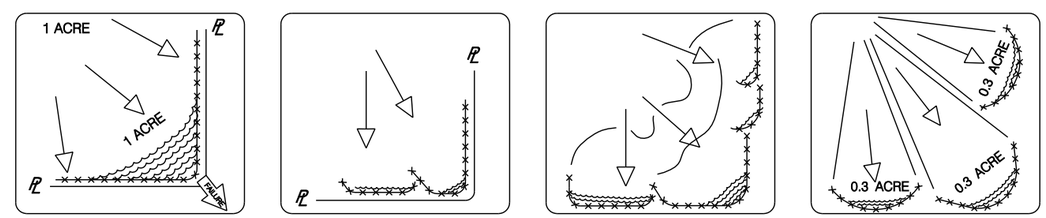


**INCORRECT - DO NOT LAYOUT "PERIMETER CONTROL" SILT FENCES ALONG PROPERTY LINES. ALL SEDIMENT LADEN RUNOFF WILL CONCENTRATE AND OVERWHELM THE SYSTEM.**

**CORRECT - INSTALL J-HOOKS**

**CORRECT - INSTALL J-HOOKS**

**DISCREET SEGMENTS OF SILT FENCE, INSTALLED WITH J-HOOKS OR SMILES' WILL BE MUCH MORE EFFECTIVE.**

NOTE:

REFER TO CHAPTER 8 AND 9 OF THE CITY OF LINCOLN DRAINAGE CRITERIA MANUAL FOR MORE INFORMATION ON SEDIMENT AND EROSION CONTROL MEASURES

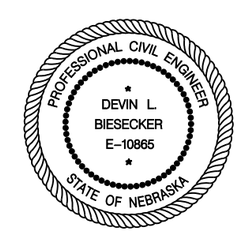


**SEDIMENT FENCE**
**L.S.P. 175**

This document was originally issued and sealed by Devin L. Biesecker, E-10865, on 2-22-10. This media should not be considered a certified document.