PROJ: 700028 OLD AS OF 070810.cfg
PEN: ...\tables\Pen\GW_PENTABLE.TBL
USER: steccaw
DATE: 9/27/2011
DGN: ...\STANDARD\Current\lsp650.dgn

CITY OF LINCOLN NEBRASKA	PROJECT NO.	SHEET NO.
	LSP 650	1
	Date: 01/20/2010	Drawn: CAW Checked: Approved:

LSP 650

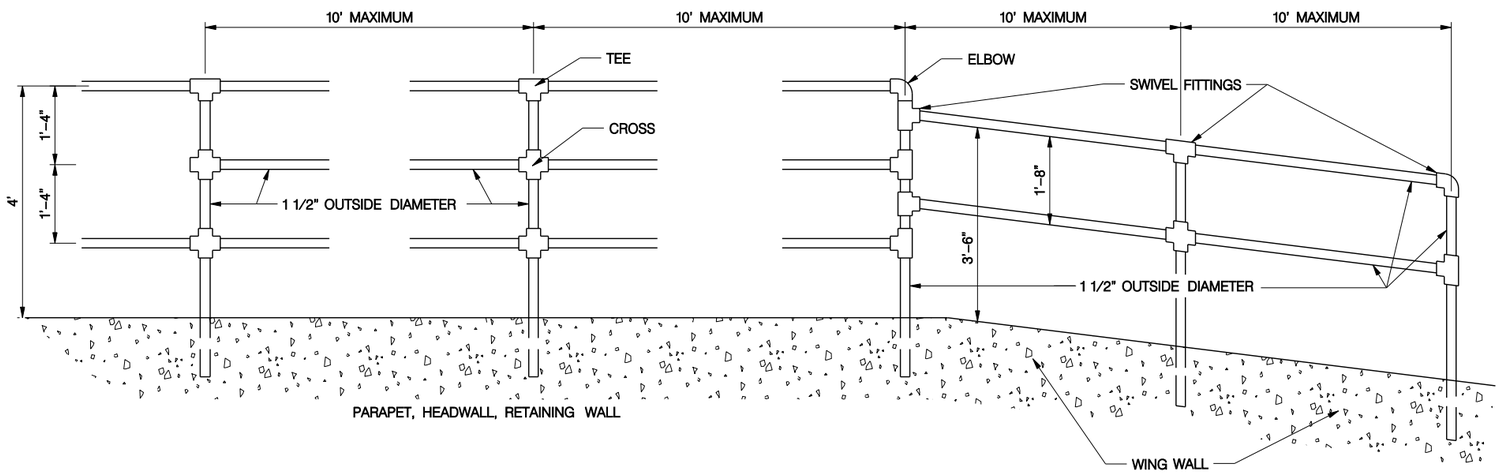

ELEVATION VIEW

TYPICAL PIPE RAILING ON PARAPET, WINGWALL, HEADWALL OR RETAINING WALL

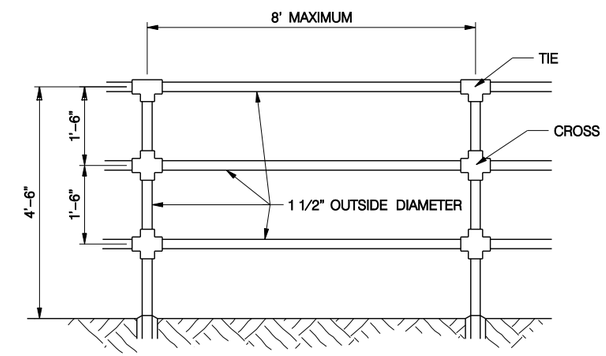

ELEVATION VIEW

TYPICAL PIPE RAILING
IN GROUND

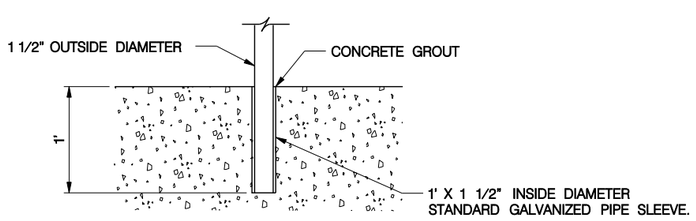

DETAIL OF

TYPICAL POST SETTING ON PARAPET, WINGWALL, HEADWALL OR RETAINING WALL

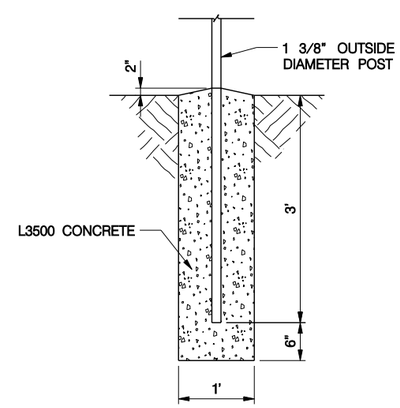

DETAIL OF

TYPICAL POST SETTING IN GROUND (PIPE RAILING)

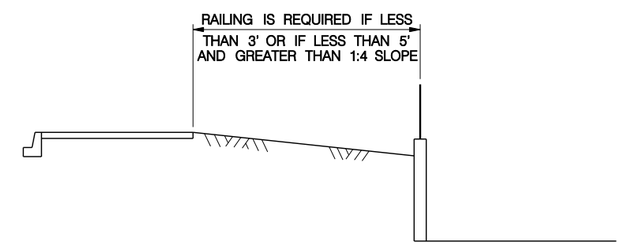

RAILINGS REQUIRED

A MINIMUM 2' WIDE GRADED AREA WITH A MAXIMUM 1:6 SLOPE SHOULD BE MAINTAINED ADJACENT TO BOTH SIDES OF A PATH OR SIDEWALK. 3' OR MORE ARE DESIRABLE TO PROVIDE CLEARANCE FROM TREES, POLES, WALLS, FENCES, GUARDRAILS OR OTHER LATERAL OBSTRUCTIONS. WHERE THE PATH IS ADJACENT TO WATERWAYS OR SLOPES DOWN STEEPER THAN 1:4, A MINIMUM 5' SEPARATION FROM THE EDGE OF THE PAVEMENT TO THE TOP OF THE SLOPE IS DESIRABLE. WHEN THIS DESIRABLE DISTANCE CAN NOT BE MET, THE INSTALLATION OF HANDRAIL ADJACENT TO THE TOP OF SLOPE SHOULD BE CONSIDERED. OTHER COMBINATIONS OF SLOPES, EMBANKMENT HEIGHTS AND CONDITIONS AT THE BOTTOM MAY WARRANT THE NEED FOR A HANDRAIL.

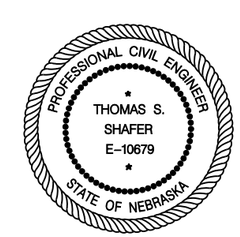

PIPE RAILING FENCE
L.S.P. 650

LSP 650

This document was originally issued and sealed by Thomas S. Shafer, E-10679, on 3-1-10. This media should not be considered a certified document.